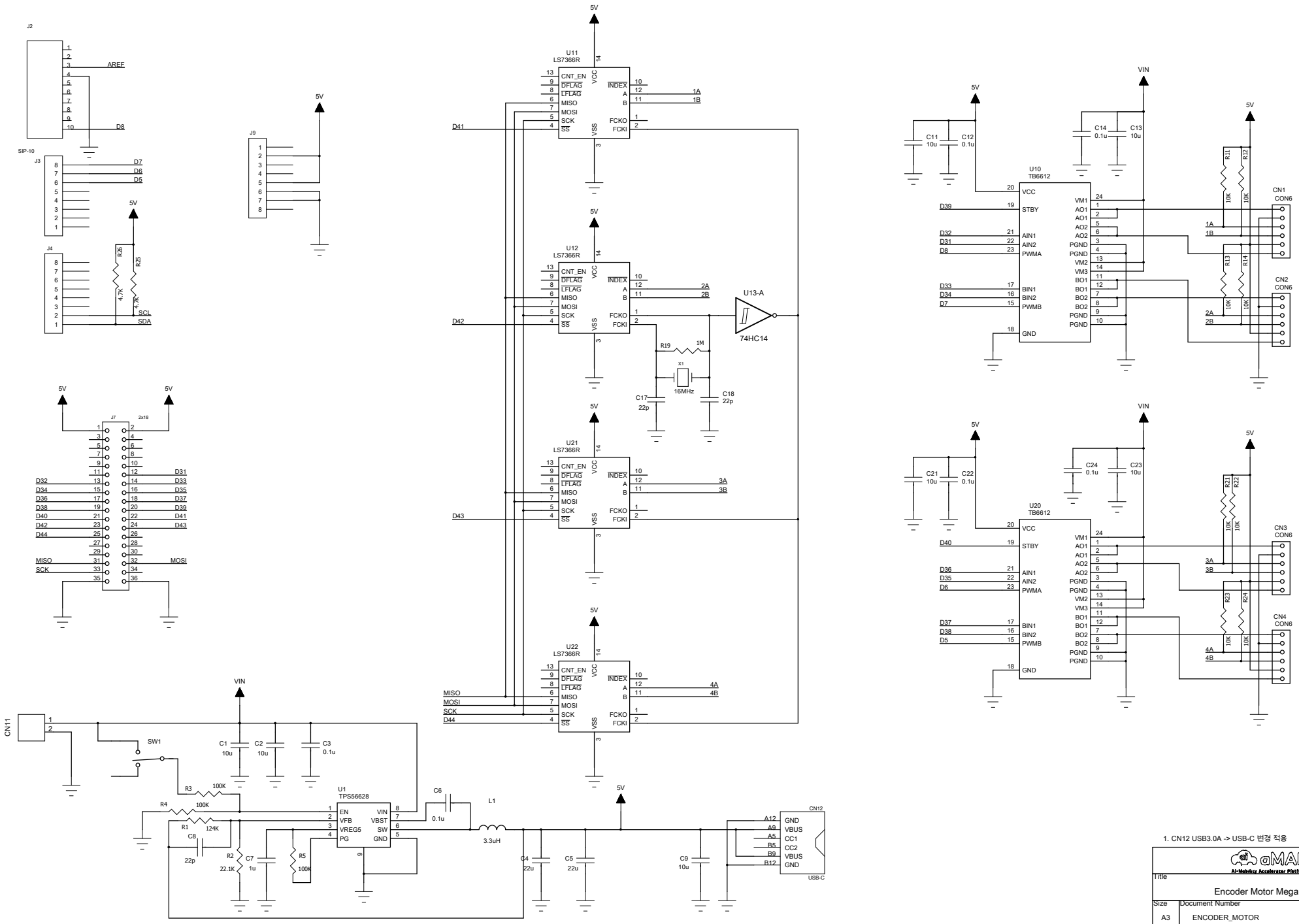

1. CN12 USB3.0A -> USB-C 변경 적용

aMAP AI-Mobilint Accelerator Platform		
Title	Encoder Motor Mega Shield	
Size A3	Document Number ENCODER_MOTOR	Rev V10
Date: 2021-10-08	Sheet 1 of 1	