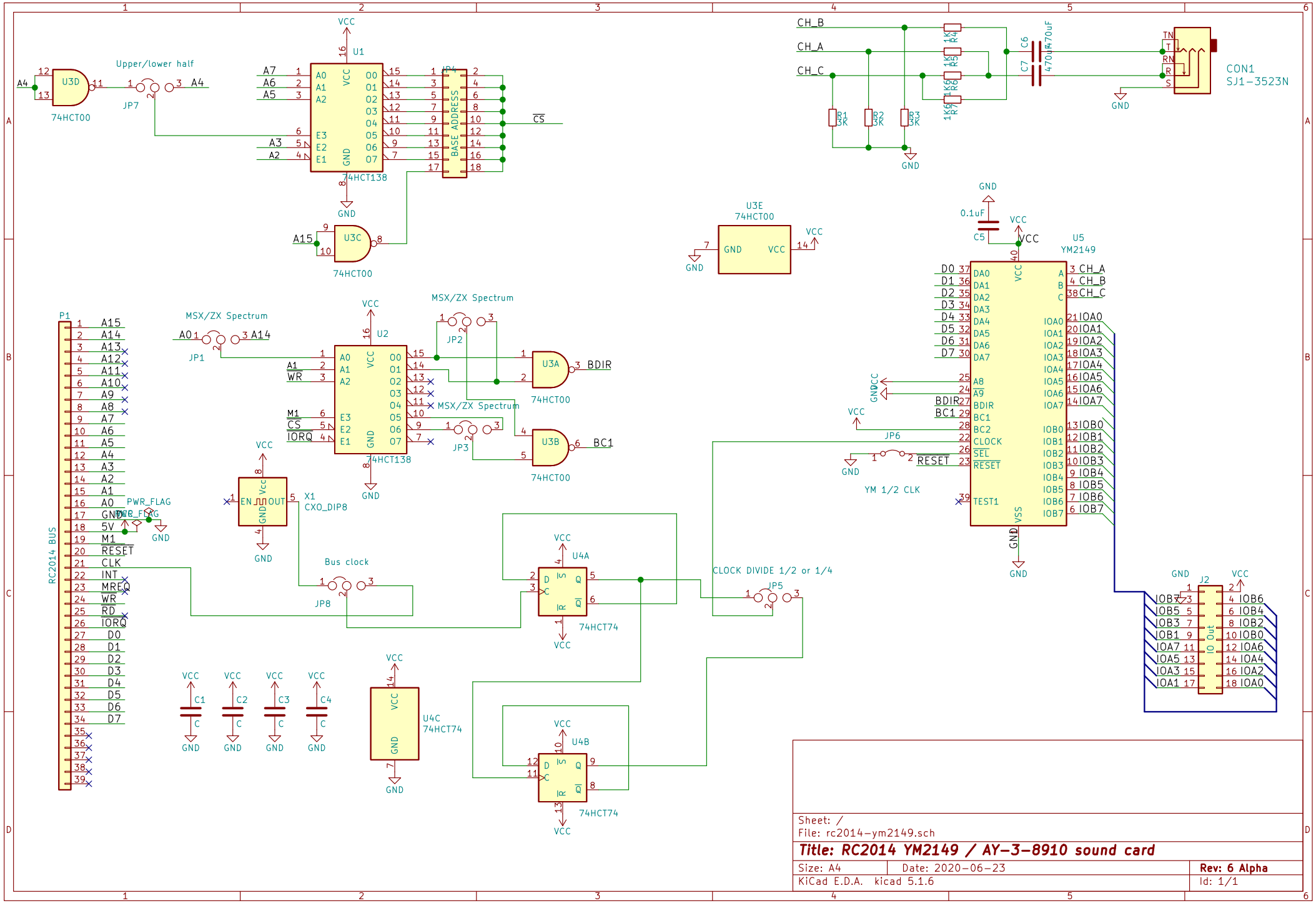
U3D
74HCT00
Upper/lower half
JP7
U1
74HCT138
BASE ADDRESS
JP4
CS
U3C
74HCT00
U3E
74HCT00
CH_B
CH_A
CH_C
R1 3K
R2 3K
R3 3K
R4 1K
R5 1K
R6 1K
R7 1K
C6 470uF
C7 470uF
CON1
SJ1-3523N
U5
YM2149
C5 0.1uF
U2
74HCT138
JP1
JP2
JP3
U3A
U3B
74HCT00
BDIR
BC1
X1
CXO_DIP8
PWR_FLAG
P1
RC2014 BUS
JP8
Bus clock
U4A
74HCT74
U4B
74HCT74
U4C
74HCT74
CLOCK DIVIDE 1/2 or 1/4
JP5
JP6
YM 1/2 CLK
RESET
J2
IO Out
C1
C2
C3
C4
Sheet: /
File: rc2014-ym2149.sch
Title: RC2014 YM2149 / AY-3-8910 sound card
Size: A4
Date: 2020-06-23
Rev: 6 Alpha
KiCad E.D.A. kicad 5.1.6
Id: 1/1