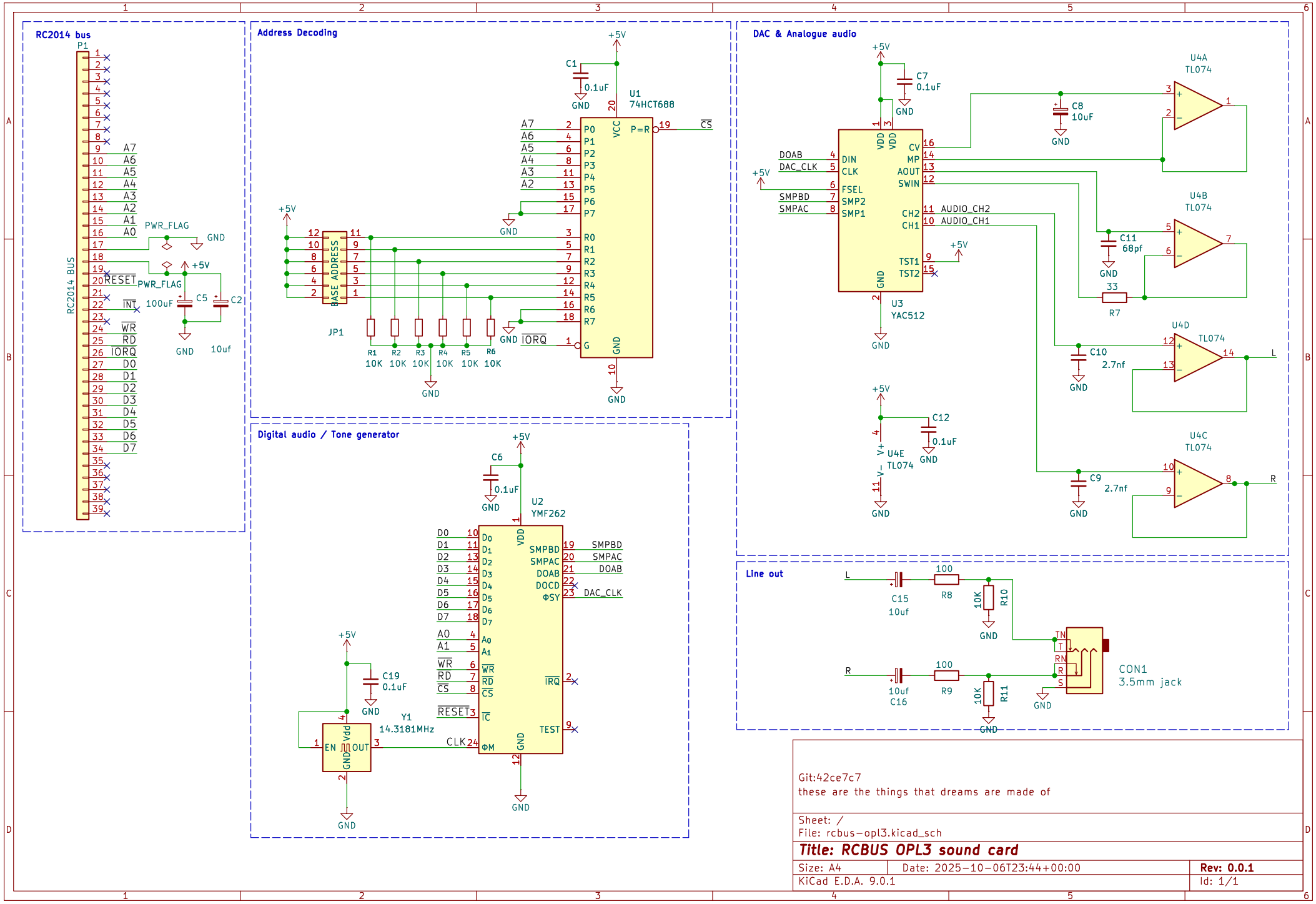
RC2014 bus
P1
RC2014 BUS
A7
A6
A5
A4
A3
A2
A1
A0
PWR_FLAG
GND
+5V
RESET
INT
WR
RD
IORQ
D0
D1
D2
D3
D4
D5
D6
D7
C5
100uF
C2
10uf
Address Decoding
U1
74HCT688
C1
0.1uF
P0
P1
P2
P3
P4
P5
P6
P7
VCC
P=R
CS
R0
R1
R2
R3
R4
R5
R6
R7
G
BASE ADDRESS
JP1
R1
R2
R3
R4
R5
R6
10K
IORQ
DAC & Analogue audio
U3
YAC512
DOAB
DAC_CLK
SMPBD
SMPAC
DIN
CLK
FSEL
SMP2
SMP1
VDD
CV
MP
AOUT
SWIN
CH2
CH1
TST1
TST2
AUDIO_CH2
AUDIO_CH1
C7
0.1uF
C8
10uF
U4A
TL074
U4B
TL074
C11
68pf
R7
33
U4D
TL074
C10
2.7nf
L
U4C
TL074
C9
2.7nf
R
U4E
TL074
C12
0.1uF
V+
V-
Digital audio / Tone generator
U2
YMF262
C6
0.1uF
D0
D1
D2
D3
D4
D5
D6
D7
A0
A1
WR
RD
CS
RESET
IC
ΦM
SMPBD
SMPAC
DOAB
DOCD
ΦSY
DAC_CLK
IRQ
TEST
C19
0.1uF
Y1
14.3181MHz
EN
OUT
Vdd
CLK
Line out
C15
10uf
R8
100
R10
10K
C16
10uf
R9
R11
CON1
3.5mm jack
TN
T
RN
R
S
Git:42ce7c7
these are the things that dreams are made of
Sheet: /
File: rcbus-opl3.kicad_sch
Title: RCBUS OPL3 sound card
Size: A4
Date: 2025-10-06T23:44+00:00
Rev: 0.0.1
KiCad E.D.A. 9.0.1
Id: 1/1