/

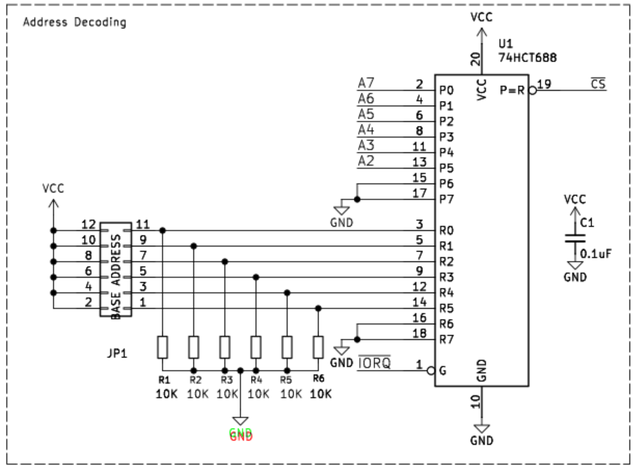
Address Decoding
U1
74HCT688
VCC
P=R
CS
A7
A6
A5
A4
A3
A2
P0
P1
P2
P3
P4
P5
P6
P7
R0
R1
R2
R3
R4
R5
R6
R7
G
IORQ
GND
C1
0.1uF
JP1
BASE ADDRESS
R1 10K
R2 10K
R3 10K
R4 10K
R5 10K
R6 10K

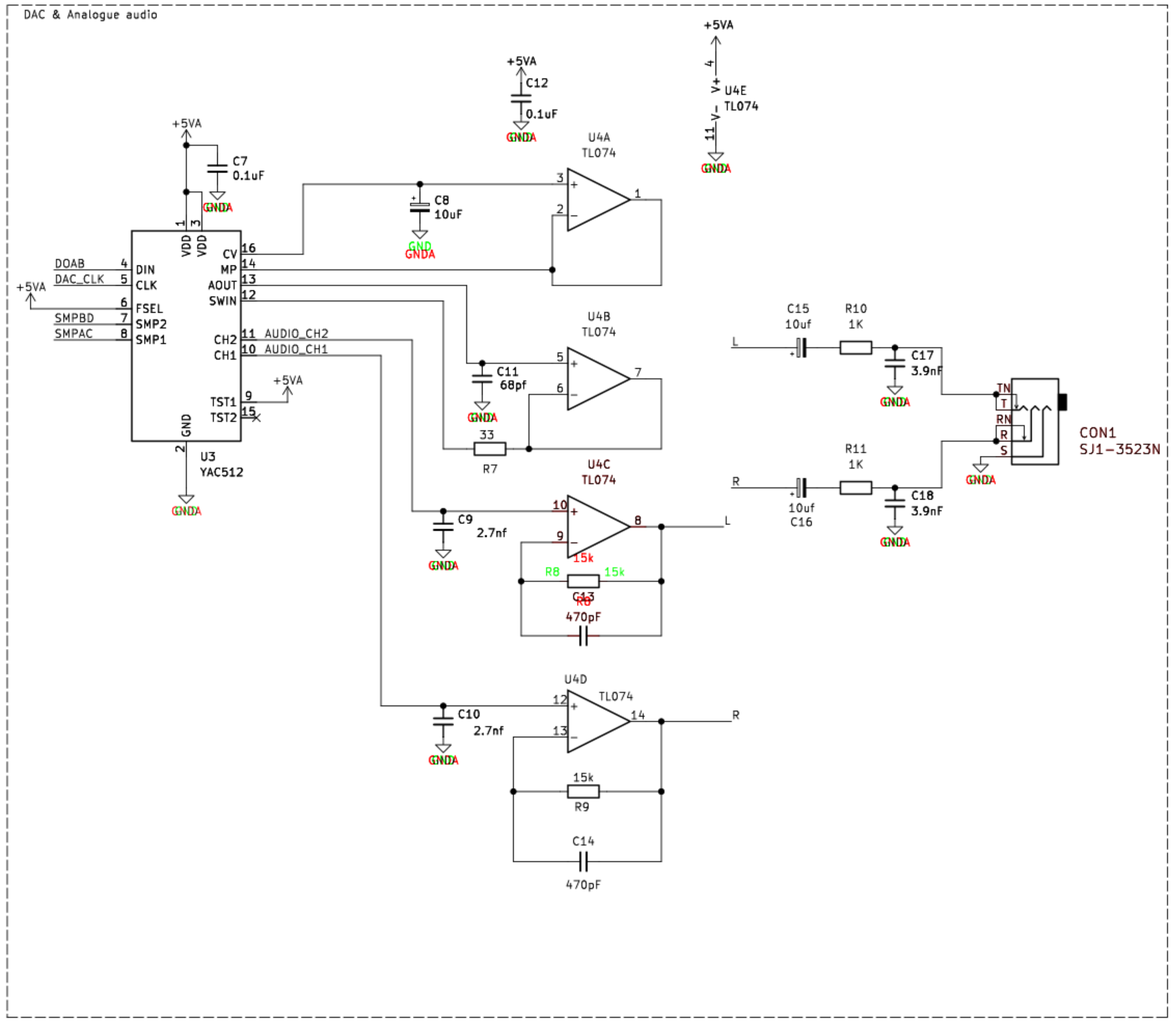
DAC & Analogue audio
U3
YAC512
DIN
CLK
FSEL
SMP2
SMP1
DOAB
DAC_CLK
SMPBD
SMPAC
CV
MP
AOUT
SWIN
CH2
CH1
TST1
TST2
AUDIO_CH2
AUDIO_CH1
VDD
GND
+5VA
C7
0.1uF
C8
10uF
C11
68pf
R7
33
C9
2.7nf
C10
2.7nf
C12
0.1uF
U4A
TL074
U4B
TL074
U4C
TL074
U4D
TL074
U4E
TL074
R8
15k
C13
470pF
R9
15k
C14
470pF
C15
10uf
R10
1K
C17
3.9nF
R11
1K
C18
3.9nF
C16
10uf
CON1
SJ1-3523N
TN
T
RN
R
S
L
R

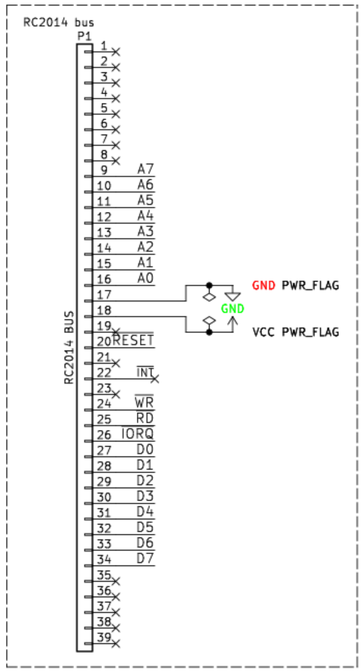
RC2014 bus
P1
RC2014 BUS
A7
A6
A5
A4
A3
A2
A1
A0
RESET
INT
WR
RD
IORQ
D0
D1
D2
D3
D4
D5
D6
D7
GND PWR_FLAG
VCC PWR_FLAG

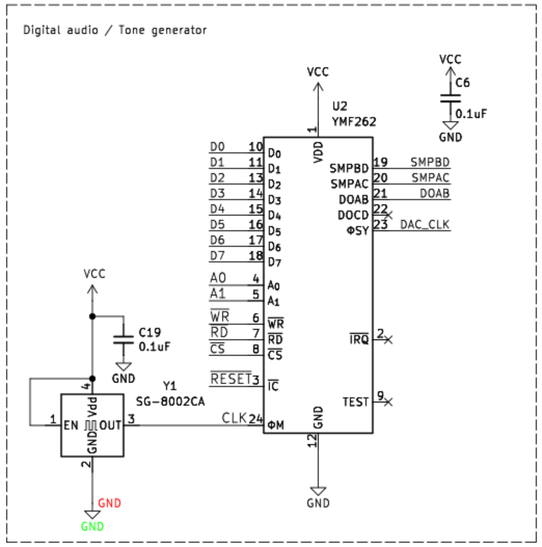
Digital audio / Tone generator
U2
YMF262
VCC
C6
0.1uF
GND
D0
D1
D2
D3
D4
D5
D6
D7
A0
A1
WR
RD
CS
RESET
SMPBD
SMPAC
DOAB
DOCD
ΦSY
DAC_CLK
IRQ
TEST
ΦM
C19
0.1uF
Y1
SG-8002CA
EN
OUT
Vdd
CLK

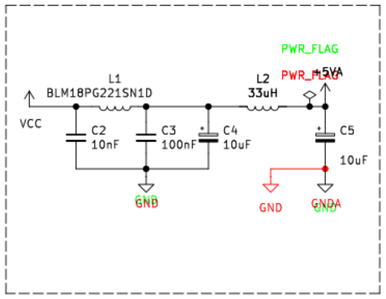
PWR_FLAG
L1
BLM18PG221SN1D
L2
33uH
+5VA
VCC
C2
10nF
C3
100nF
C4
10uF
C5
10uF
GND
GNDA

Non-functional components
H1
MountingHole