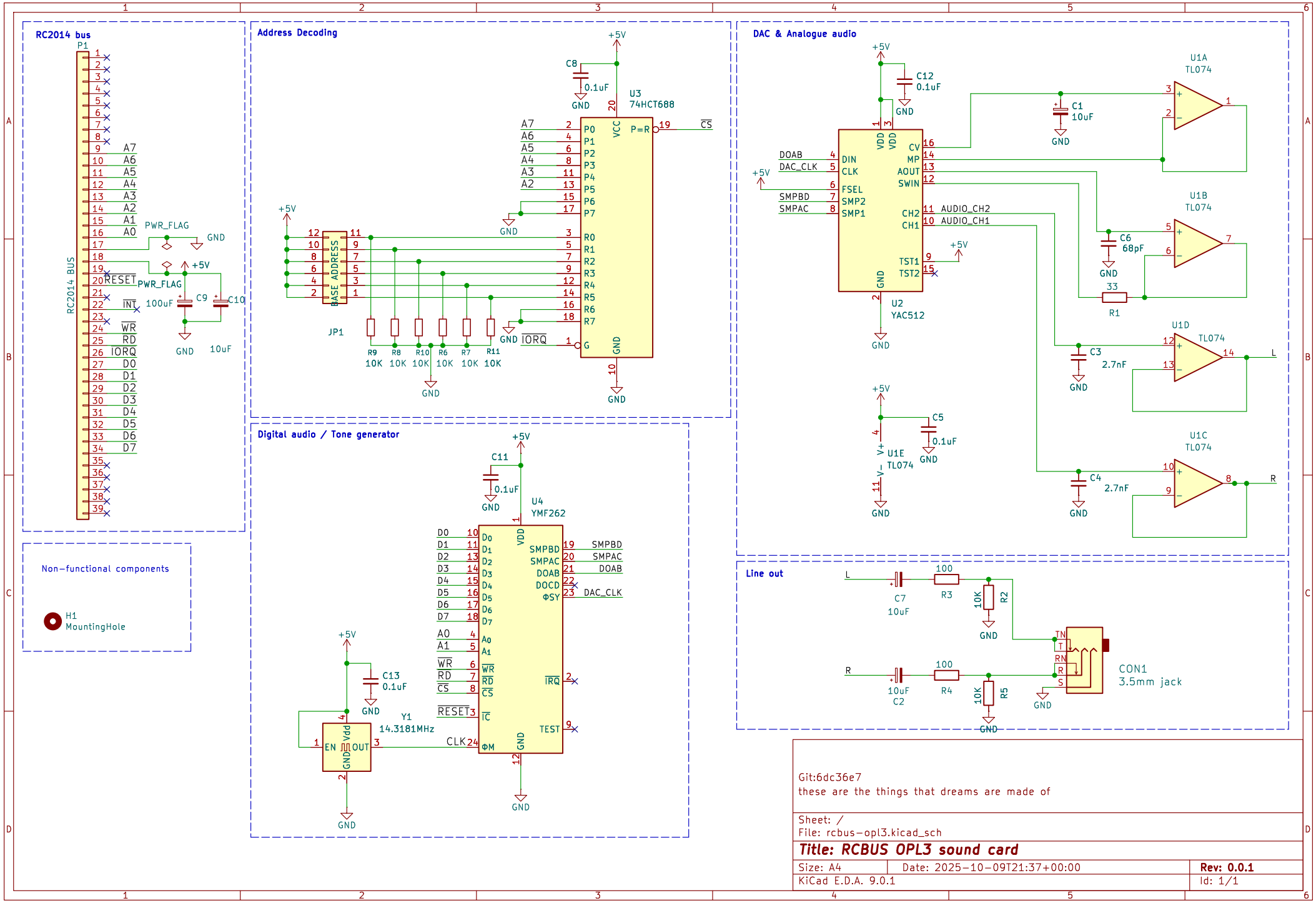
RC2014 bus
P1
RC2014 BUS
A7
A6
A5
A4
A3
A2
A1
A0
PWR_FLAG
GND
+5V
RESET
INT
WR
RD
IORQ
D0
D1
D2
D3
D4
D5
D6
D7
C9
100uF
C10
10uF
Address Decoding
C8
0.1uF
U3
74HCT688
P=R
CS
BASE ADDRESS
JP1
R9
R8
R10
R6
R7
R11
10K
Digital audio / Tone generator
C11
0.1uF
U4
YMF262
SMPBD
SMPAC
DOAB
DOCD
ΦSY
DAC_CLK
IRQ
TEST
ΦM
C13
0.1uF
Y1
14.3181MHz
EN
OUT
Vdd
DAC & Analogue audio
C12
0.1uF
U2
YAC512
DIN
CLK
FSEL
SMP2
SMP1
CV
MP
AOUT
SWIN
CH2
CH1
TST1
TST2
AUDIO_CH2
AUDIO_CH1
U1A
TL074
U1B
TL074
U1D
TL074
U1C
TL074
U1E
TL074
C1
10uF
C6
68pF
R1
33
C3
2.7nF
C4
2.7nF
C5
0.1uF
L
R
Line out
C7
10uF
R3
100
R2
10K
C2
10uF
R4
R5
CON1
3.5mm jack
Non-functional components
H1
MountingHole
Git:6dc36e7
these are the things that dreams are made of
Sheet: /
File: rcbus-opl3.kicad_sch
Title: RCBUS OPL3 sound card
Size: A4
Date: 2025-10-09T21:37+00:00
Rev: 0.0.1
KiCad E.D.A. 9.0.1
Id: 1/1