/

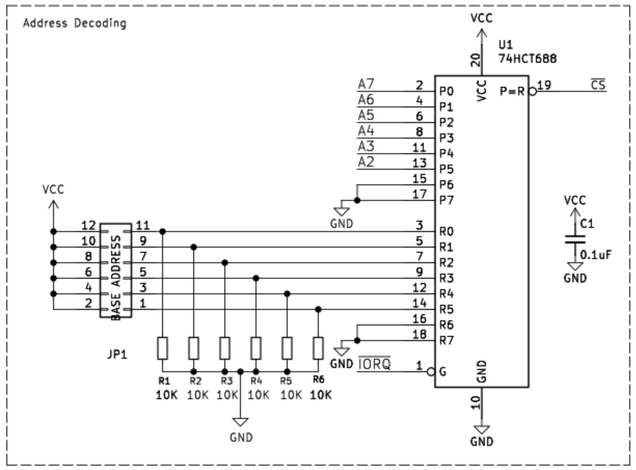


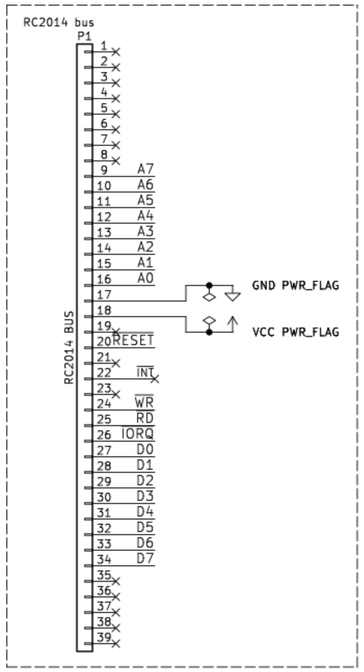


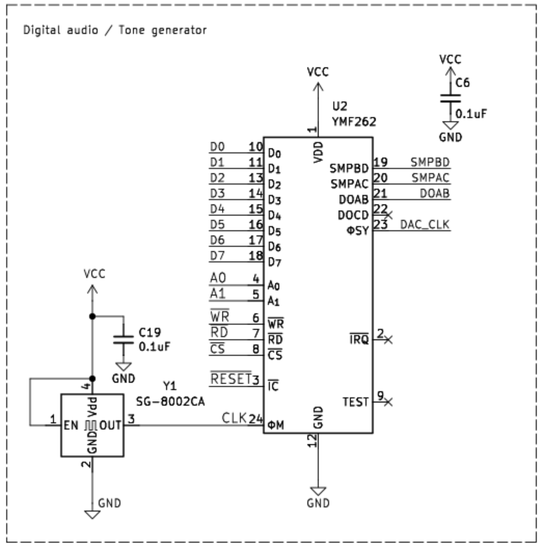


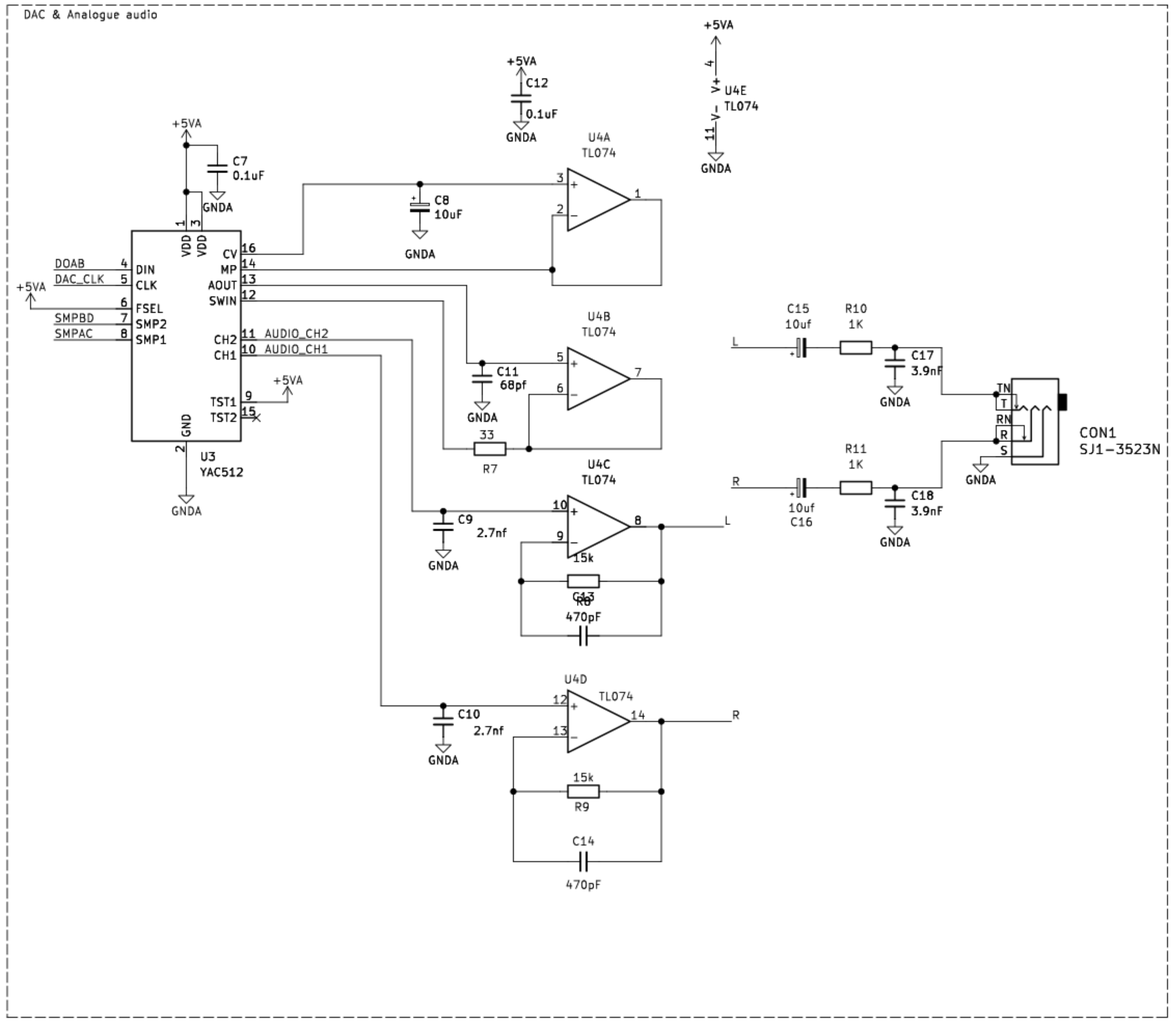


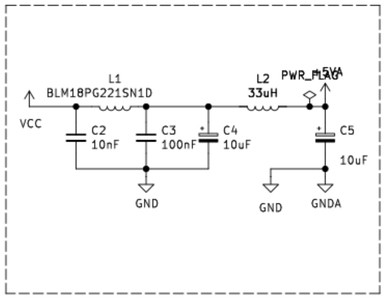


Non-functional components

H1
MountingHole