/

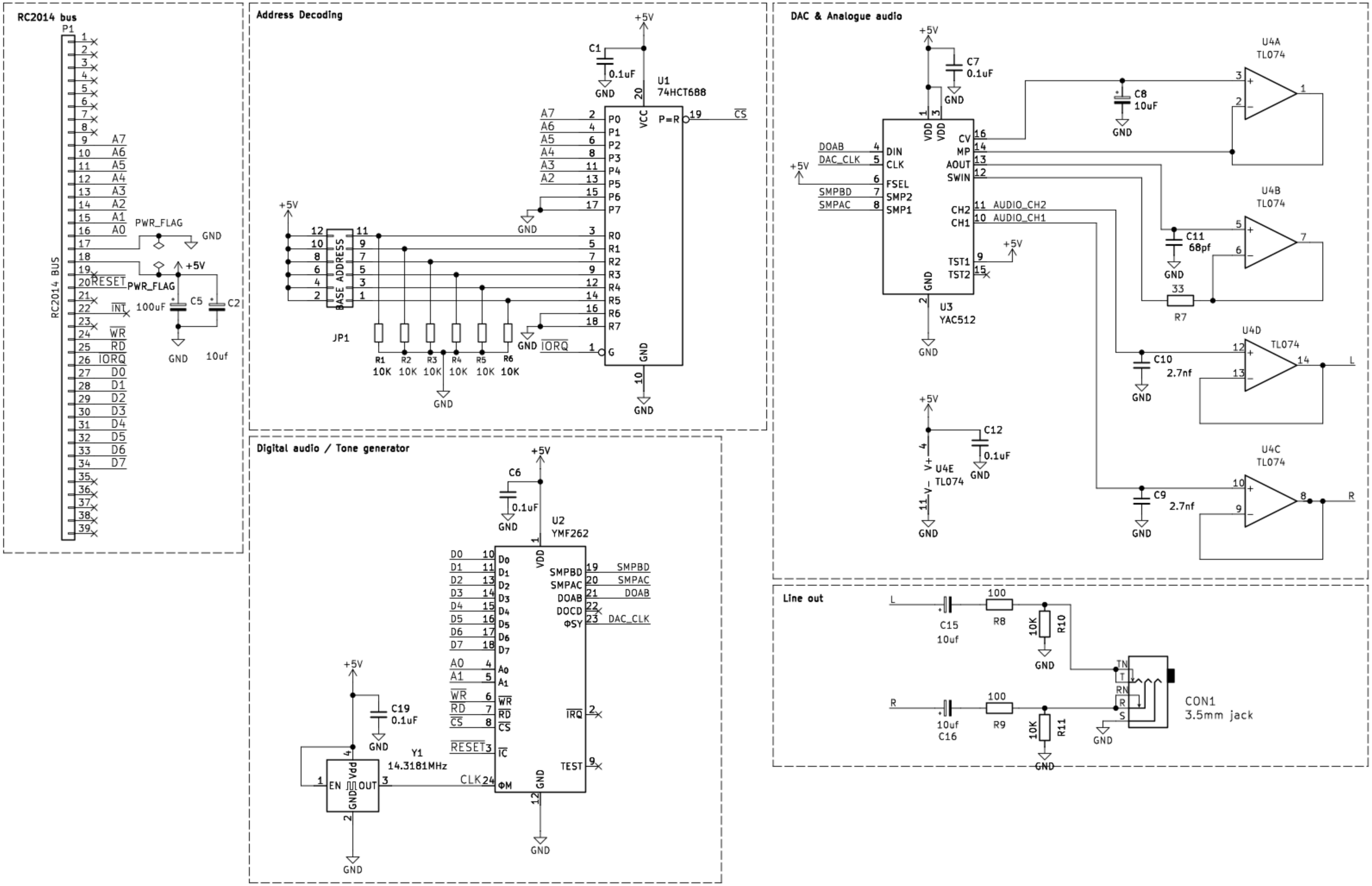
RC2014 bus
P1
RC2014 BUS
A7
A6
A5
A4
A3
A2
A1
A0
PWR_FLAG
GND
+5V
RESET
INT
WR
RD
IORQ
D0
D1
D2
D3
D4
D5
D6
D7
C5
100uF
C2
10uf
Address Decoding
C1
0.1uF
U1
74HCT688
VCC
P=R
CS
P0
P1
P2
P3
P4
P5
P6
P7
R0
R1
R2
R3
R4
R5
R6
R7
G
BASE ADDRESS
JP1
R1
R2
R3
R4
R5
R6
10K
Digital audio / Tone generator
C6
0.1uF
U2
YMF262
VDD
SMPBD
SMPAC
DOAB
DOCD
ΦSY
DAC_CLK
IRQ
TEST
RESET
IC
ΦM
CLK
C19
0.1uF
Y1
14.3181MHz
EN
OUT
Vdd
DAC & Analogue audio
C7
0.1uF
U3
YAC512
DIN
CLK
FSEL
SMP2
SMP1
DOAB
DAC_CLK
SMPBD
SMPAC
CV
MP
AOUT
SWIN
CH2
CH1
TST1
TST2
AUDIO_CH2
AUDIO_CH1
C8
10uF
U4A
TL074
U4B
TL074
C11
68pf
R7
33
U4D
TL074
C10
2.7nf
L
U4E
TL074
C12
0.1uF
U4C
TL074
C9
2.7nf
R
Line out
C15
10uf
R8
100
R10
10K
C16
10uf
R9
R11
CON1
3.5mm jack