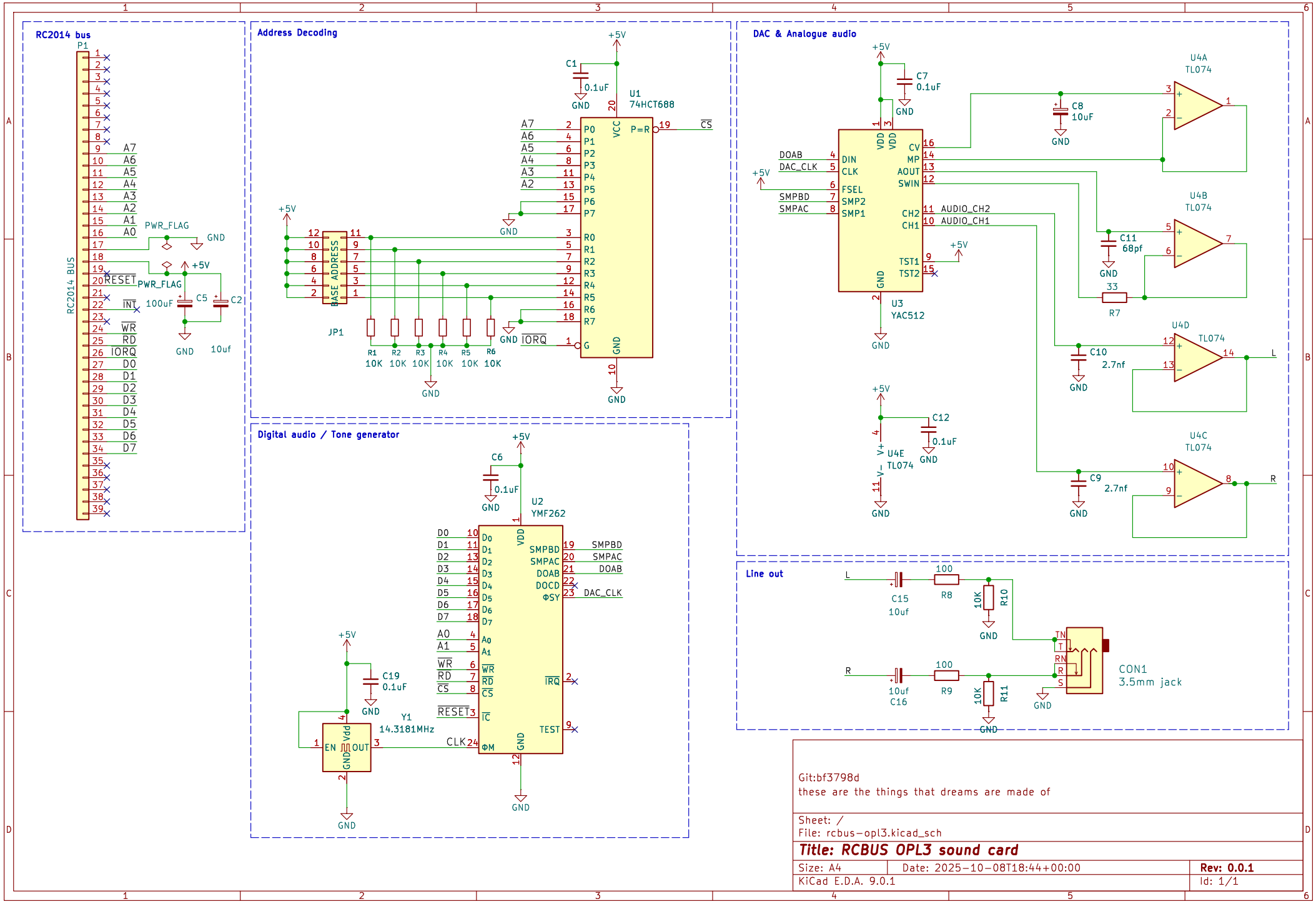

Git:bf3798d
these are the things that dreams are made of

Sheet: /
File: rcbus-opl3.kicad_sch

Title: RCBUS OPL3 sound card

Size: A4	Date: 2025-10-08T18:44+00:00	Rev: 0.0.1
KiCad E.D.A. 9.0.1		Id: 1/1