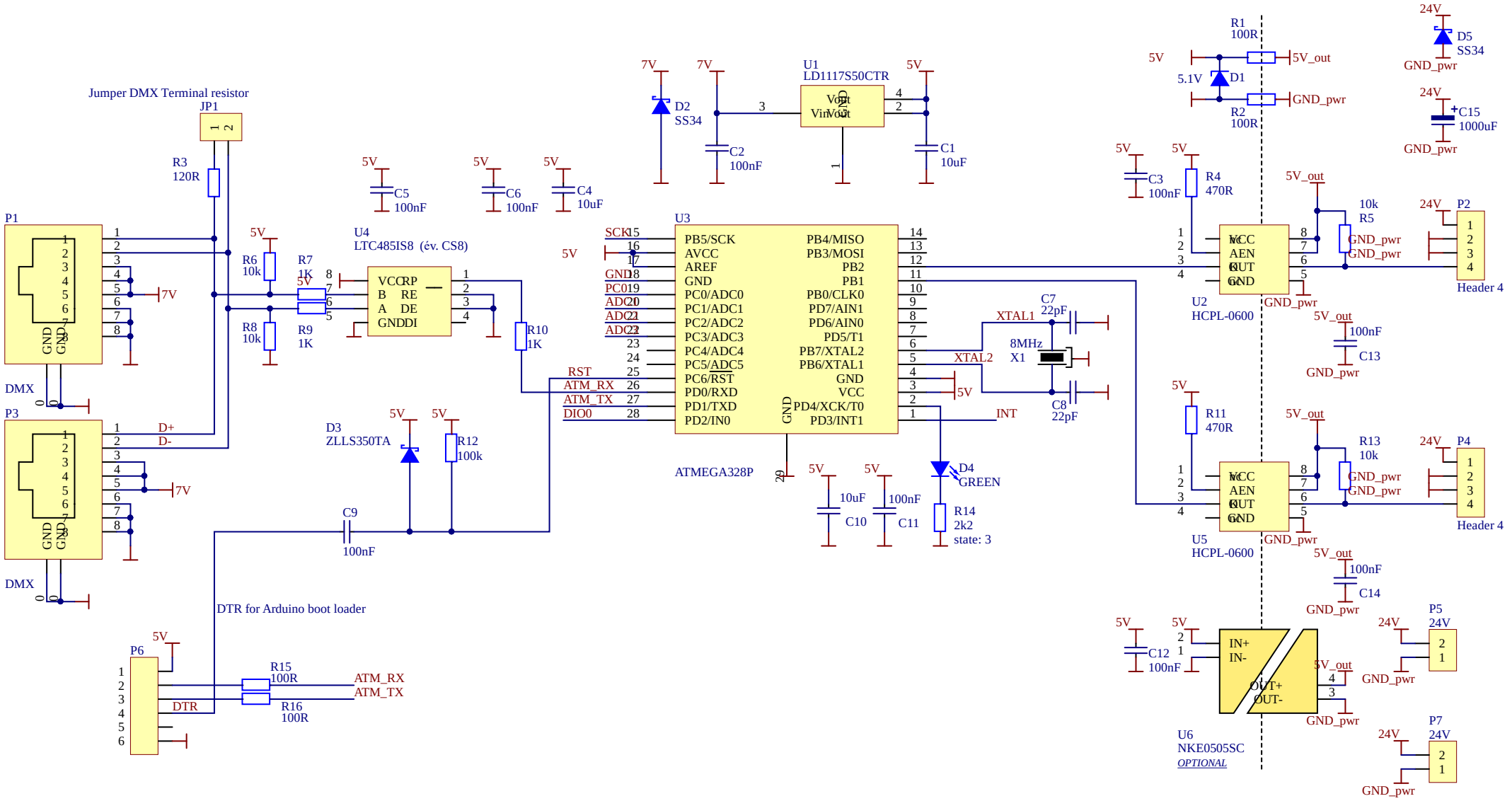

Project **PumpController.PrjPcb**	Date: 13.03.2018 17:13:06	*Emmanuel Droz* *DISAL* *EPFL* *CH-1015 LAUSANNE*	ÉCOLE POLYTECHNIQUE FÉDÉRALE DE LAUSANNE
Part **PUMP control DMX-PWM**	Revision: A		
File : **pumpController.SchDoc**	Page 1 de 1		*Distributed Intelligent Systems And Algorithms Laboratory*

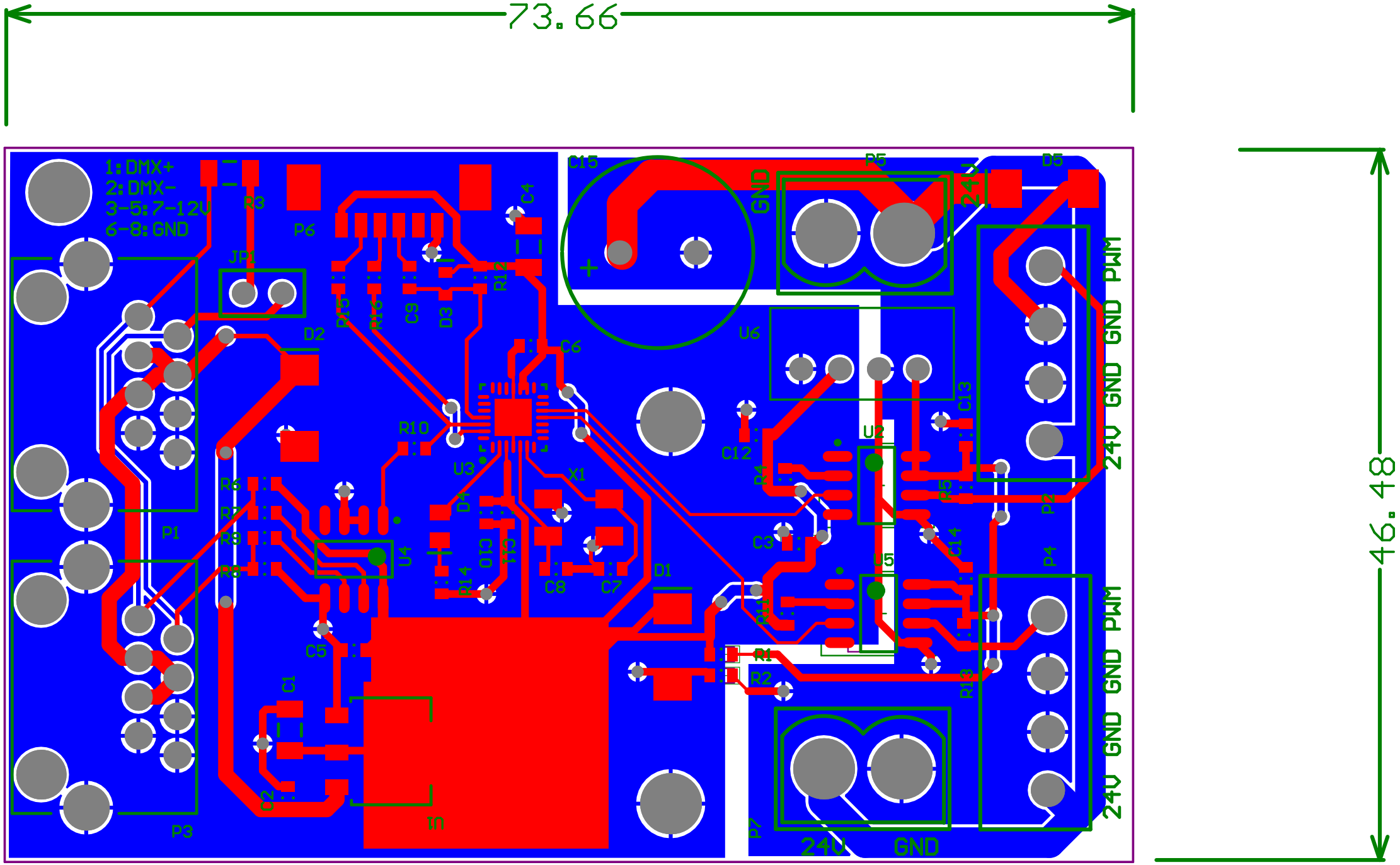
73.66
46.48
1:DMX+
2:DMX-
3-5:7-12V
6-8:GND
P1
P2
P3
P4
P5
P6
P7
JP1
R3
D2
D3
D5
C4
C15
GND
24V
U6
U2
U5
U3
U4
X1
C6
C12
C13
C3
C14
R4
R5
R11
R13
R1
R2
R10
R12
R14
R6
R7
R8
R9
C10
C11
C8
C7
D1
C5
C1
C2
PWM
GND
24V