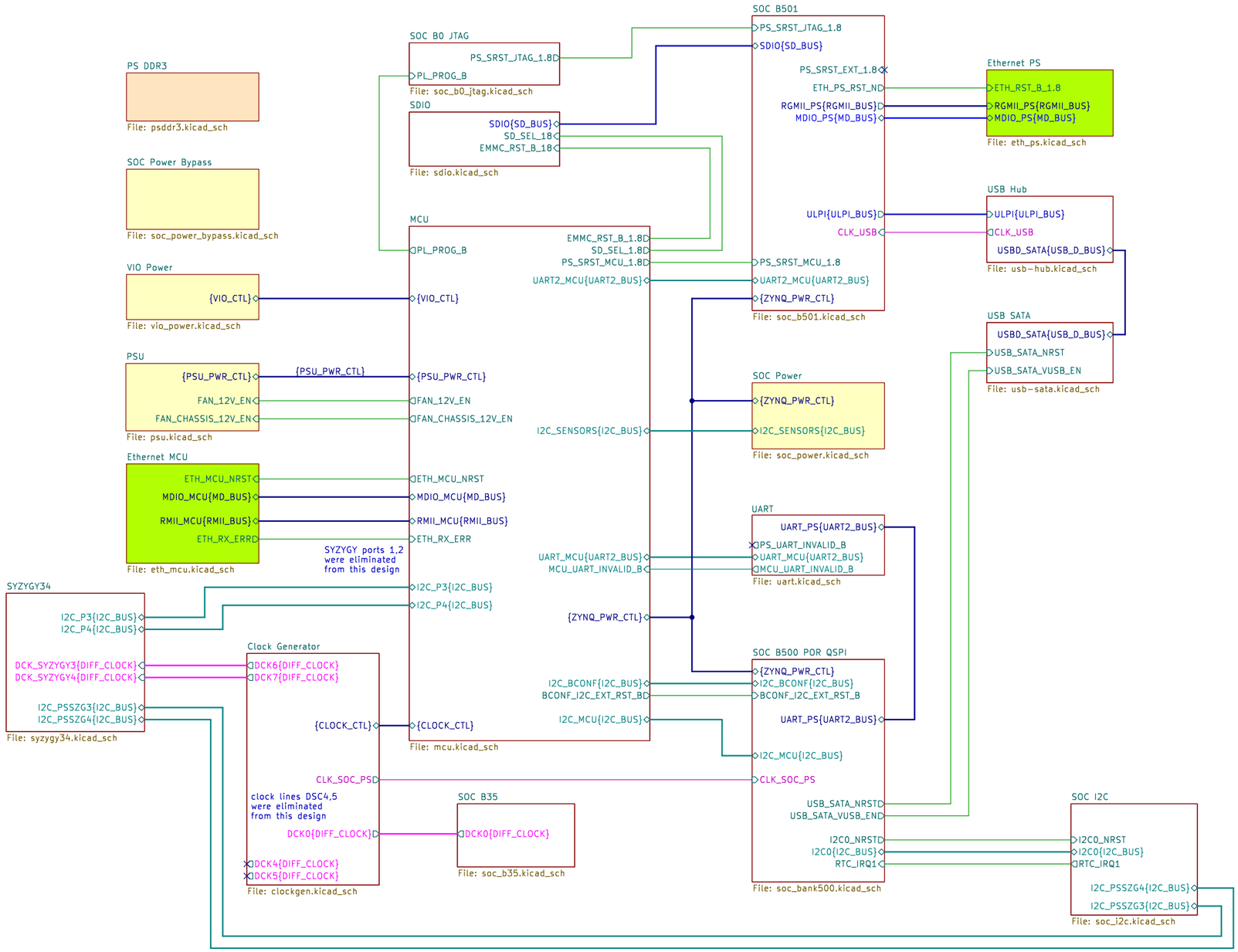

PAGE	DESCRIPTION
1 ROOT PAGE	Block Diagram of the project
2 PSU	ATX PSU connector and filters
3 SOC Power	A secondary power supply for SOC
4 MCU	MCU
5 Clock Generator	Clocks for SOC and SYZYGY, external master sync
6 UART	UART peripherals
7 SOC B0 JTAG	SOC JTAG
8 SOC Power Bypass	SOC bypass capacitors
9 SOC B500 POR QSPI	Power on reset, QSPI, SOC boot config
10 SOC B501	Peripheral resets, ULPI and RGMII buses
11 PS DDR3	DDR3 RAM for SOC PS sybsystem
12 SDIO	SDIO and EMMC shared bus
13 SOC B35	A redundant clock for SOC PS
14 Ethernet PS	RGMII Ethernet peripheral
15 USB Hub	USB ULPI transceiver and hub
16 USB SATA	USB SATA converter and SATA SSD socket
17 VIO Power	Variable IO power for SYZYGY slots
18 SYZYGY34	SYZYGY slots
19 SOC I2C	SOC I2C
20 Ethernet MCU	10/100 RMII Ethernet for MCU

Stackup JLC10161H-2116(1.57mm±10%)

F.Cu, B.Cu:
diff 80Ohm track / spacing: 8.28/6 mil; 0.2103/0.1524 mm
single 40Ohm: 11.23 mil; 0.2852 mm

diff 100Ohm track / spacing: 5.58/8 mil; 0.1417/0.2032 mm
single 50Ohm: 7.36mil; 0.1869 mm

In3, In5, In7 internal layers:
diff 80Ohm: 6.44/8 mil; 0.1636/0.2032 mm
single 40Ohm: 7.03mil; 0.1786 mm

diff 100Ohm: 4.29/11 mil; 0.1090/0.2794 mm
single 50Ohm: 4.54mil; 0.1153 mm

NOTE:
SYZYGY ports 1,2
were eliminated
from this design

H1 MH1_M3
H2 MH2_M3
H3 MH3_M3
H4 MH4_M3
JP1 SolderJumper_2_Open
R1 0R
GND

H5 EARTH_MH_M3
H6 MountingHole
H7 MountingHole
H8 MountingHole
H9 MountingHole
H10 MountingHole
H11 MountingHole
H12 MountingHole
H13 MountingHole
H14 MountingHole
H15 MountingHole
H16 MountingHole
H17 MountingHole

SYZYGY Carrier Mainboard
Author: Nazim Aghabayov
(c) Nazim 2025
Top Level Schema
electrodyssey.net

electrodyssey.net

Sheet: /
File: NASR.kicad_sch

Title: NASR-M

rel: Fletched Bustard

Size: A3 | Date: 2025-10-21 | **Rev: D 0.9.4**
KiCad E.D.A. 9.0.5 | Id: 1/20

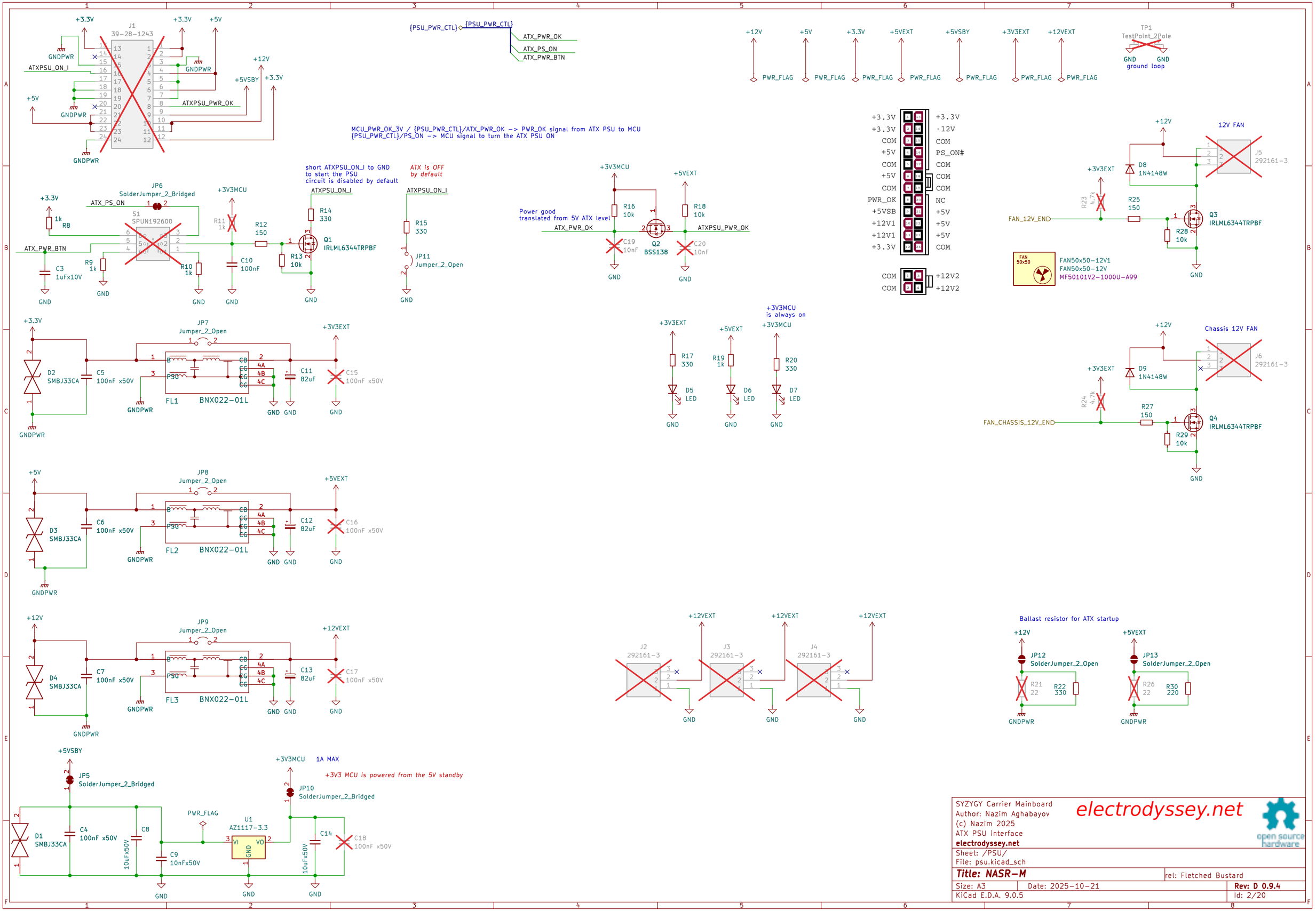

SYZYGY Carrier Mainboard
Author: Nazim Aghabayov
(c) Nazim 2025
ATX PSU interface
electrodyssey.net

electrodyssey.net

open source hardware

Sheet: /PSU/
File: psu.kicad_sch

Title: NASR-M

rel: Fletched Bustard

Size: A3 | Date: 2025-10-21 | **Rev: D 0.9.4**

KiCad E.D.A. 9.0.5 | Id: 2/20

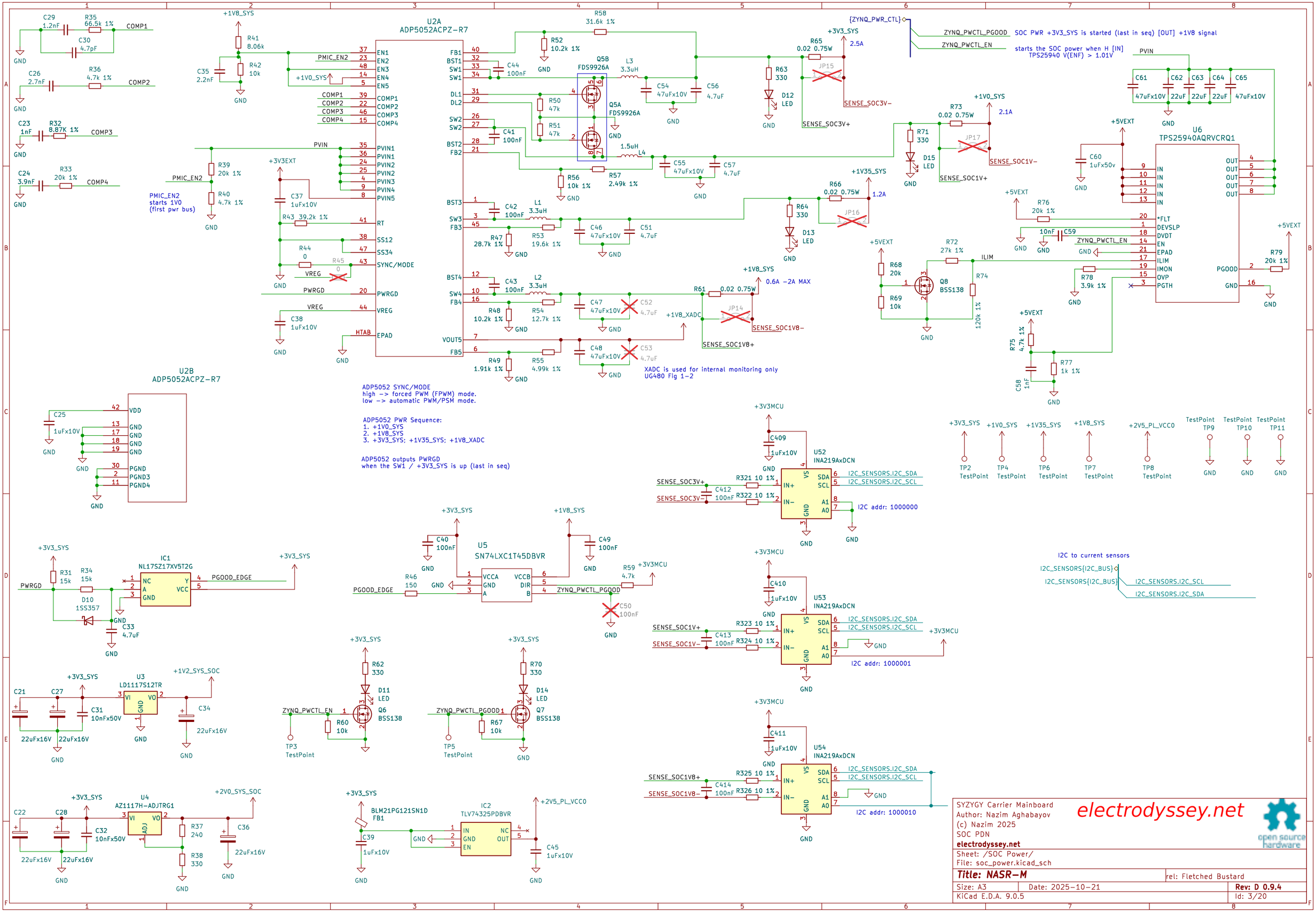
U2A
ADP5052ACPZ-R7
U2B
ADP5052ACPZ-R7
U6
TPS25940AQRVCRQ1
U5
SN74LXC1T45DBVR
U52
INA219AxDCN
U53
INA219AxDCN
U54
INA219AxDCN
U3
LD1117S12TR
U4
AZ1117H-ADJTRG1
IC1
NL17SZ17XV5T2G
IC2
TLV74325PDBVR
Q5B
FDS9926A
Q5A
FDS9926A
Q8
BSS138
Q6
BSS138
Q7
BSS138
{ZYNQ_PWR_CTL}
ZYNQ_PWCTL_PGOOD
ZYNQ_PWCTL_EN
SOC PWR +3V3_SYS is started (last in seq) [OUT] +1V8 signal
starts the SOC power when H [IN]
TPS25940 V(ENF) > 1.01V
PMIC_EN2
starts 1V0
(first pwr bus)
ADP5052 SYNC/MODE
high -> forced PWM (FPWM) mode.
low -> automatic PWM/PSM mode.
ADP5052 PWR Sequence:
1. +1V0_SYS
2. +1V8_SYS
3. +3V3_SYS; +1V35_SYS; +1V8_XADC
ADP5052 outputs PWRGD
when the SW1 / +3V3_SYS is up (last in seq)
XADC is used for internal monitoring only
UG480 Fig 1-2
I2C addr: 1000000
I2C addr: 1000001
I2C addr: 1000010
I2C to current sensors
I2C_SENSORS.I2C_SDA
I2C_SENSORS.I2C_SCL
SYZYGY Carrier Mainboard
Author: Nazim Aghabayov
(c) Nazim 2025
SOC PDN
electrodyssey.net
electrodyssey.net
Sheet: /SOC Power/
File: soc_power.kicad_sch
Title: NASR-M
rel: Fletched Bustard
Size: A3
Date: 2025-10-21
Rev: D 0.9.4
KiCad E.D.A. 9.0.5
Id: 3/20

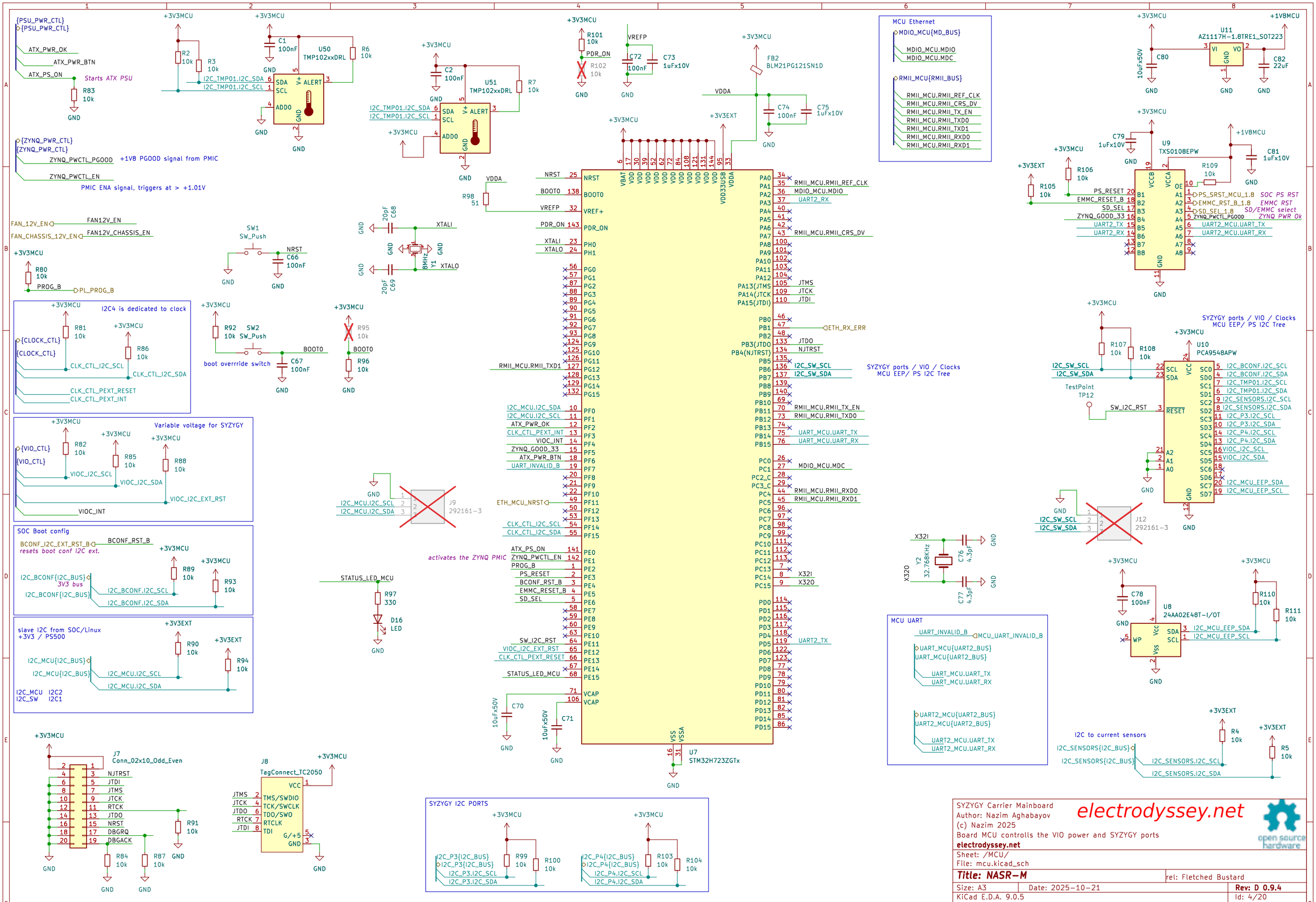

SYZYGY Carrier Mainboard
Author: Nazim Aghabayov
(c) Nazim 2025
Board MCU controlls the VIO power and SYZYGY ports
electrodyssey.net

electrodyssey.net

Sheet: /MCU/
File: mcu.kicad_sch

Title: NASR-M | rel: Fletched Bustard

Size: A3 | Date: 2025-10-21 | **Rev: D 0.9.4**
KiCad E.D.A. 9.0.5 | Id: 4/20

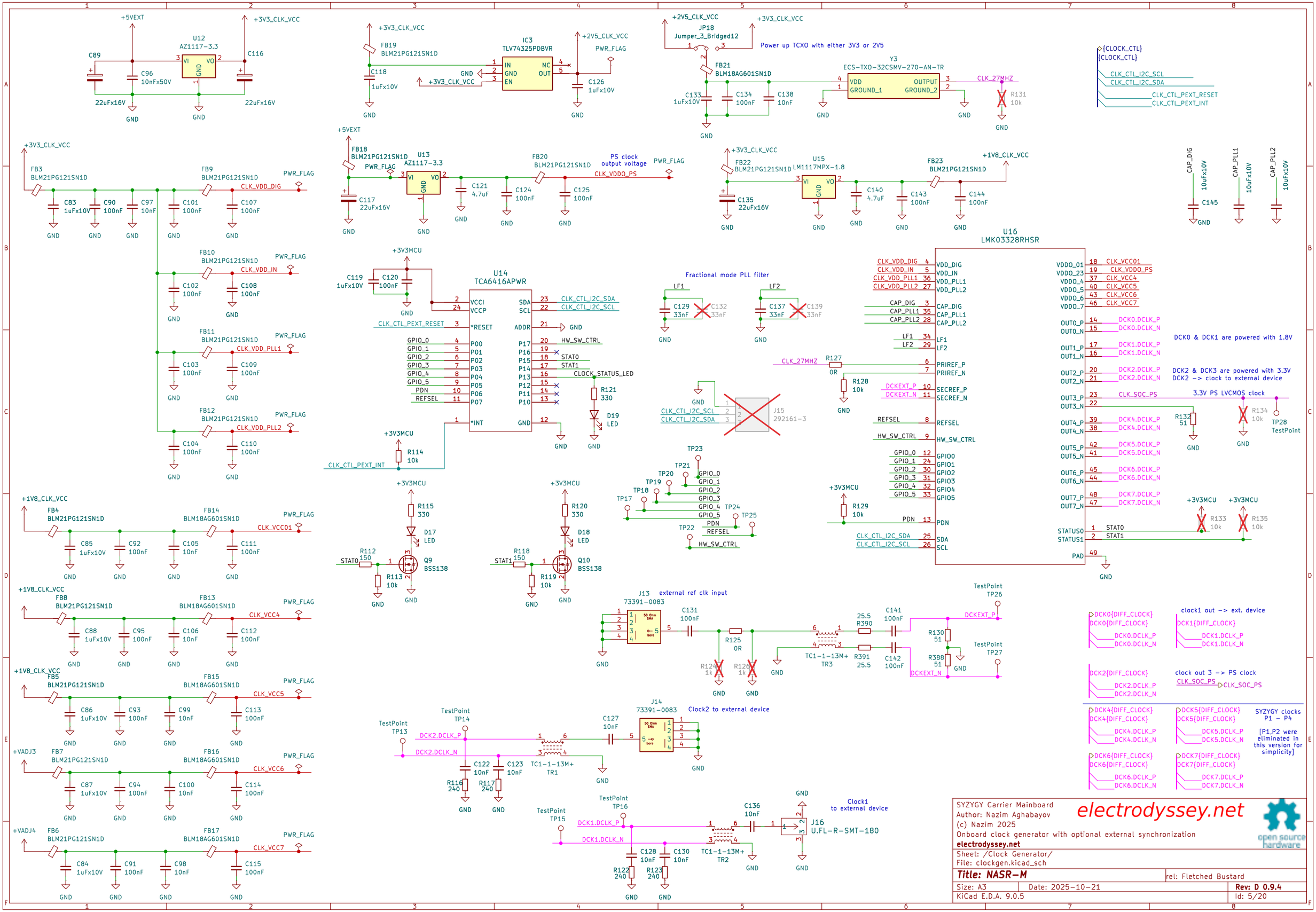
U12 AZ1117-3.3
+5VEXT
+3V3_CLK_VCC
C89 22uFx16V
C96 10nFx50V
C116 22uFx16V
GND
FB19 BLM21PG121SN1D
C118 1uFx10V
IC3 TLV74325PDBVR
IN GND EN NC OUT
+2V5_CLK_VCC
PWR_FLAG
C126 1uFx10V
JP18 Jumper_3_Bridged12
Power up TCXO with either 3V3 or 2V5
FB21 BLM18AG601SN1D
C133 1uFx10V
C134 100nF
C138 10nF
Y3 ECS-TXO-32CSMV-270-AN-TR
VDD GROUND_1 OUTPUT GROUND_2
CLK_27MHZ
R131 10k
{CLOCK_CTL}
CLK_CTL_I2C_SCL
CLK_CTL_I2C_SDA
CLK_CTL_PEXT_RESET
CLK_CTL_PEXT_INT
FB3 BLM21PG121SN1D
FB9 BLM21PG121SN1D
CLK_VDD_DIG
C83 1uFx10V
C90 100nF
C97 10nF
C101 100nF
C107 100nF
FB18 BLM21PG121SN1D
U13 AZ1117-3.3
C117 22uFx16V
C121 4.7uF
C124 100nF
C125 100nF
FB20 BLM21PG121SN1D
PS clock output voltage
CLK_VDDO_PS
FB22 BLM21PG121SN1D
U15 LM1117MPX-1.8
C135 22uFx16V
C140 4.7uF
C143 100nF
C144 100nF
FB23 BLM21PG121SN1D
+1V8_CLK_VCC
CAP_DIG 10uFx10V C145
CAP_PLL1 10uFx10V
CAP_PLL2 10uFx10V
FB10 BLM21PG121SN1D
CLK_VDD_IN
C102 100nF
C108 100nF
FB11 BLM21PG121SN1D
CLK_VDD_PLL1
C103 100nF
C109 100nF
FB12 BLM21PG121SN1D
CLK_VDD_PLL2
C104 100nF
C110 100nF
+3V3MCU
C119 1uFx10V
C120 100nF
U14 TCA6416APWR
VCCI VCCP *RESET *INT
SDA SCL ADDR P00 P01 P02 P03 P04 P05 P06 P07 P17 P16 P15 P14 P13 P12 P11 P10 GND
CLK_CTL_I2C_SDA
CLK_CTL_I2C_SCL
CLK_CTL_PEXT_RESET
GPIO_0 GPIO_1 GPIO_2 GPIO_3 GPIO_4 GPIO_5 PDN REFSEL
HW_SW_CTRL
STAT0
STAT1
CLOCK_STATUS_LED
R121 330
D19 LED
R114 10k
CLK_CTL_PEXT_INT
Fractional mode PLL filter
LF1 C129 33nF C132 33nF
LF2 C137 33nF C139 33nF
U16 LMK03328RHSR
VDD_DIG VDD_IN VDD_PLL1 VDD_PLL2 CAP_DIG CAP_PLL1 CAP_PLL2 LF1 LF2 PRIREF_P PRIREF_N SECREF_P SECREF_N REFSEL HW_SW_CTRL GPIO0 GPIO1 GPIO2 GPIO3 GPIO4 GPIO5 PDN SDA SCL PAD
VDDO_01 VDDO_23 VDDO_4 VDDO_5 VDDO_6 VDDO_7
CLK_VCC01 CLK_VDDO_PS CLK_VCC4 CLK_VCC5 CLK_VCC6 CLK_VCC7
OUT0_P OUT0_N DCK0.DCLK_P DCK0.DCLK_N
OUT1_P OUT1_N DCK1.DCLK_P DCK1.DCLK_N
OUT2_P OUT2_N DCK2.DCLK_P DCK2.DCLK_N
OUT3_P OUT3_N CLK_SOC_PS
OUT4_P OUT4_N DCK4.DCLK_P DCK4.DCLK_N
OUT5_P OUT5_N DCK5.DCLK_P DCK5.DCLK_N
OUT6_P OUT6_N DCK6.DCLK_P DCK6.DCLK_N
OUT7_P OUT7_N DCK7.DCLK_P DCK7.DCLK_N
STATUS0 STATUS1 STAT0 STAT1
DCK0 & DCK1 are powered with 1.8V
DCK2 & DCK3 are powered with 3.3V
DCK2 -> clock to external device
3.3V PS LVCMOS clock
R132 51
R134 10k
TP28 TestPoint
R133 10k
R135 10k
CLK_27MHZ R127 0R
R128 10k
DCKEXT_P DCKEXT_N
J15 292161-3
CLK_CTL_I2C_SCL CLK_CTL_I2C_SDA
TP23 TP21 TP20 TP19 TP18 TP17 TP24 TP25 TP22
R129 10k
FB4 BLM21PG121SN1D
FB14 BLM18AG601SN1D
CLK_VCC01
C85 1uFx10V
C92 100nF
C105 10nF
C111 100nF
R115 330
D17 LED
Q9 BSS138
R112 150
R113 10k
STAT0
R120 330
D18 LED
Q10 BSS138
R118 150
R119 10k
STAT1
FB8 BLM21PG121SN1D
FB13 BLM18AG601SN1D
CLK_VCC4
C88 1uFx10V
C95 100nF
C106 10nF
C112 100nF
FB5 BLM21PG121SN1D
FB15 BLM18AG601SN1D
CLK_VCC5
C86 1uFx10V
C93 100nF
C99 10nF
C113 100nF
+VADJ3
FB7 BLM21PG121SN1D
FB16 BLM18AG601SN1D
CLK_VCC6
C87 1uFx10V
C94 100nF
C100 10nF
C114 100nF
+VADJ4
FB6 BLM21PG121SN1D
FB17 BLM18AG601SN1D
CLK_VCC7
C84 1uFx10V
C91 100nF
C98 10nF
C115 100nF
J13 73391-0083
external ref clk input
C131 100nF
R125 0R
R124 1k
R126 1k
25.5 R390
C141 100nF
TC1-1-13M+ TR3
R391 25.5
C142 100nF
R130 51
R388 51
TestPoint TP26
TestPoint TP27
DCKEXT_P
DCKEXT_N
DCK0{DIFF_CLOCK} DCK0.DCLK_P DCK0.DCLK_N
clock1 out -> ext. device
DCK1{DIFF_CLOCK} DCK1.DCLK_P DCK1.DCLK_N
DCK2{DIFF_CLOCK} DCK2.DCLK_P DCK2.DCLK_N
clock out 3 -> PS clock
CLK_SOC_PS
DCK4{DIFF_CLOCK} DCK4.DCLK_P DCK4.DCLK_N
DCK5{DIFF_CLOCK} DCK5.DCLK_P DCK5.DCLK_N
SYZYGY clocks P1 - P4
[P1,P2 were eliminated in this version for simplicity]
DCK6{DIFF_CLOCK} DCK6.DCLK_P DCK6.DCLK_N
DCK7{DIFF_CLOCK} DCK7.DCLK_P DCK7.DCLK_N
J14 73391-0083
Clock2 to external device
C127 10nF
TestPoint TP13
TestPoint TP14
DCK2.DCLK_P
DCK2.DCLK_N
C122 10nF
C123 10nF
TC1-1-13M+ TR1
R116 240
R117 240
TestPoint TP15
TestPoint TP16
DCK1.DCLK_P
DCK1.DCLK_N
C136 10nF
Clock1 to external device
J16 U.FL-R-SMT-180
C128 10nF
C130 10nF
TC1-1-13M+ TR2
R122 240
R123 240
SYZYGY Carrier Mainboard
Author: Nazim Aghabayov
(c) Nazim 2025
Onboard clock generator with optional external synchronization
electrodyssey.net
electrodyssey.net
open source hardware
Sheet: /Clock Generator/
File: clockgen.kicad_sch
Title: NASR-M
rel: Fletched Bustard
Size: A3
Date: 2025-10-21
Rev: D 0.9.4
KiCad E.D.A. 9.0.5
Id: 5/20

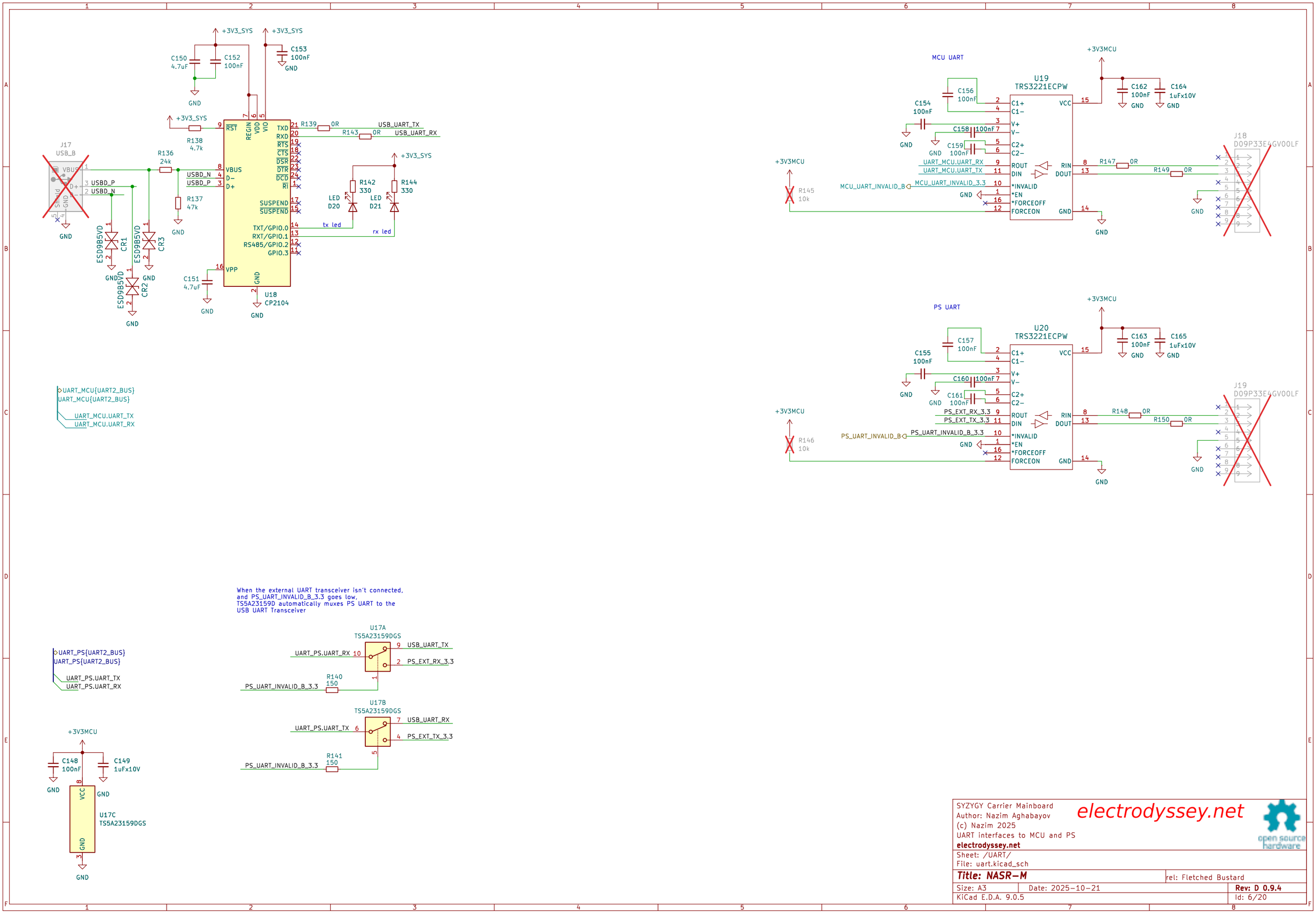
+3V3_SYS
C150 4.7uF
C152 100nF
C153 100nF
GND
J17 USB_B
VBUS
D+
D-
GND
SHIELD
USBD_P
USBD_N
R136 24k
R138 4.7k
R137 47k
ESD9B5VD CR1
ESD9B5VD CR2
ESD9B5VD CR3
C151 4.7uF
U18 CP2104
RST
REGIN
VDD
VIO
VBUS
D-
D+
VPP
TXD
RXD
RTS
CTS
DSR
DTR
DCD
RI
SUSPEND
TXT/GPIO.0
RXT/GPIO.1
RS485/GPIO.2
GPIO.3
R139 0R
R143 0R
USB_UART_TX
USB_UART_RX
R142 330
R144 330
LED D20
LED D21
tx led
rx led
UART_MCU{UART2_BUS}
UART_MCU.UART_TX
UART_MCU.UART_RX
MCU UART
U19 TRS3221ECPW
C156 100nF
C154 100nF
C158 100nF
C159 100nF
C162 100nF
C164 1uFx10V
+3V3MCU
C1+
C1-
V+
V-
C2+
C2-
VCC
ROUT
DIN
RIN
DOUT
*INVALID
*EN
*FORCEOFF
FORCEON
UART_MCU.UART_RX
UART_MCU.UART_TX
MCU_UART_INVALID_B
MCU_UART_INVALID_B_3.3
R145 10k
R147 0R
R149 0R
J18 D09P33E4GV00LF
PS UART
U20 TRS3221ECPW
C157 100nF
C155 100nF
C160 100nF
C161 100nF
C163 100nF
C165 1uFx10V
PS_EXT_RX_3.3
PS_EXT_TX_3.3
PS_UART_INVALID_B
PS_UART_INVALID_B_3.3
R146 10k
R148 0R
R150 0R
J19 D09P33E4GV00LF
UART_PS{UART2_BUS}
UART_PS.UART_TX
UART_PS.UART_RX
When the external UART transceiver isn't connected,
and PS_UART_INVALID_B_3.3 goes low,
TS5A23159D automatically muxes PS UART to the
USB UART Transceiver
U17A TS5A23159DGS
U17B TS5A23159DGS
R140 150
R141 150
U17C TS5A23159DGS
C148 100nF
C149 1uFx10V
SYZYGY Carrier Mainboard
Author: Nazim Aghabayov
(c) Nazim 2025
UART interfaces to MCU and PS
electrodyssey.net
Sheet: /UART/
File: uart.kicad_sch
Title: NASR-M
rel: Fletched Bustard
Size: A3
Date: 2025-10-21
Rev: D 0.9.4
KiCad E.D.A. 9.0.5
Id: 6/20

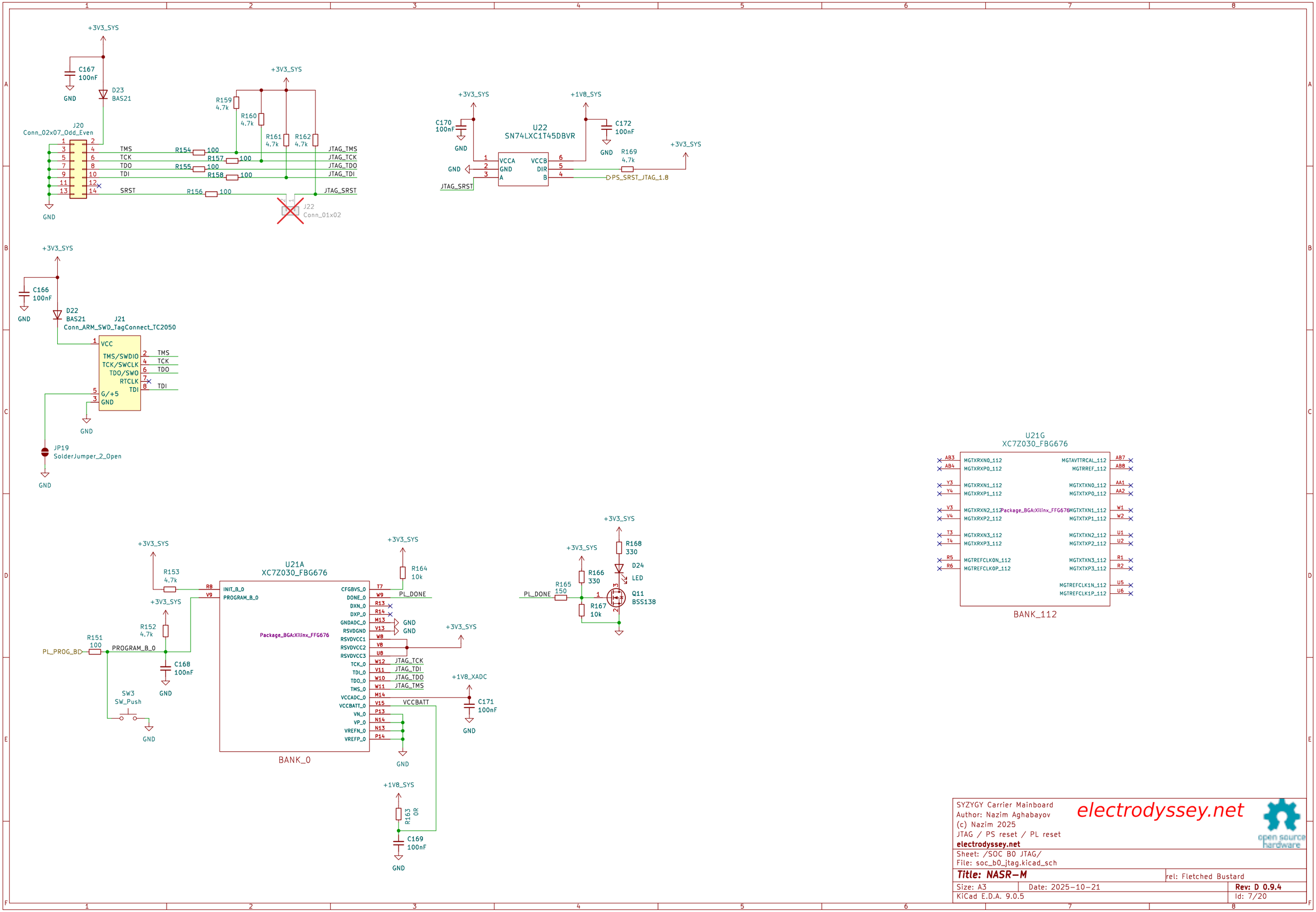

SYZYGY Carrier Mainboard
Author: Nazim Aghabayov
(c) Nazim 2025
JTAG / PS reset / PL reset
electrodyssey.net

electrodyssey.net

open source hardware

Sheet: /SOC B0 JTAG/
File: soc_b0_jtag.kicad_sch

Title: NASR-M

rel: Fletched Bustard

Size: A3	Date: 2025-10-21	**Rev: D 0.9.4**
KiCad E.D.A. 9.0.5		Id: 7/20

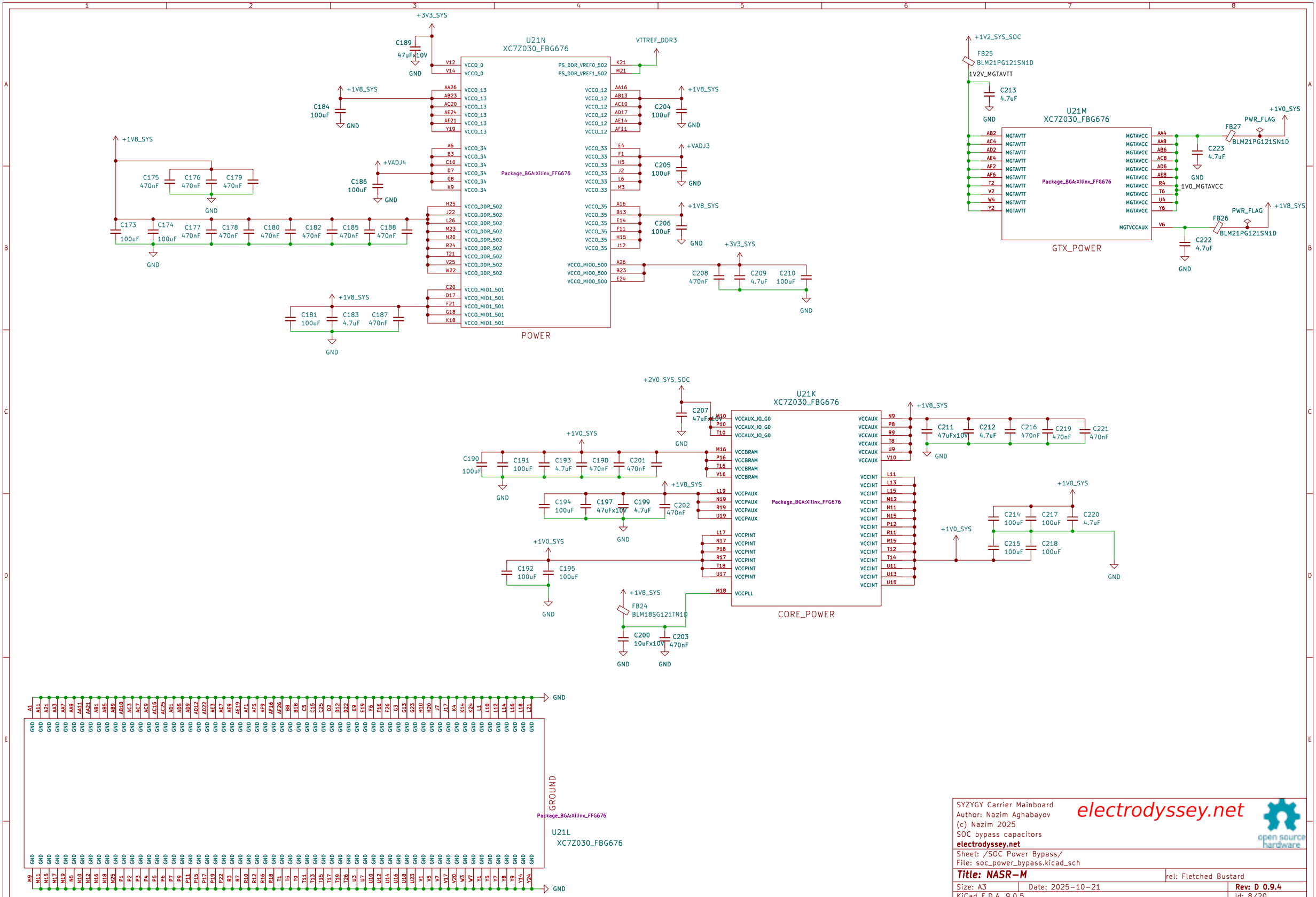

SYZYGY Carrier Mainboard
Author: Nazim Aghabayov
(c) Nazim 2025
SOC bypass capacitors
electrodyssey.net

electrodyssey.net

open source hardware

Sheet: /SOC Power Bypass/
File: soc_power_bypass.kicad_sch

Title: NASR-M

rel: Fletched Bustard

Size: A3 | Date: 2025-10-21 | **Rev: D 0.9.4**
KiCad E.D.A. 9.0.5 | Id: 8/20

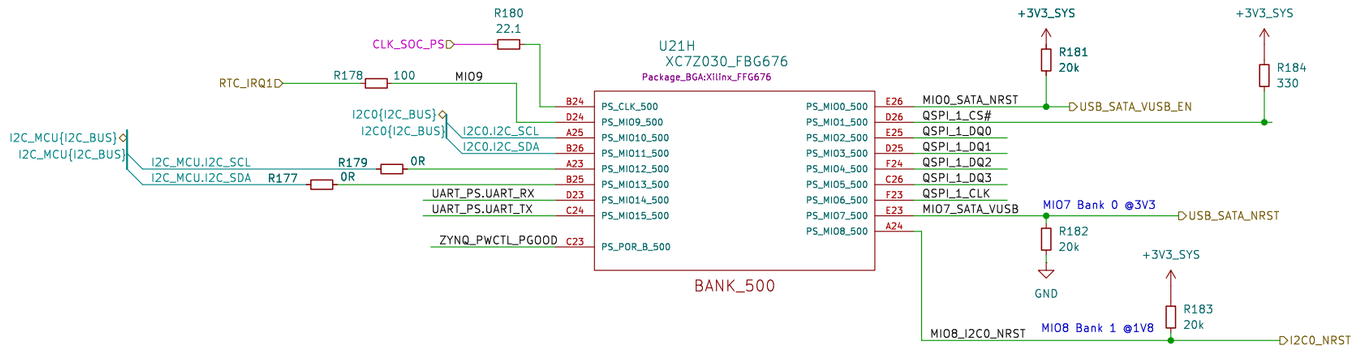

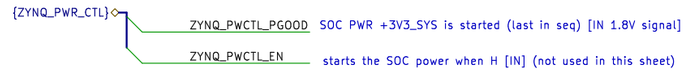

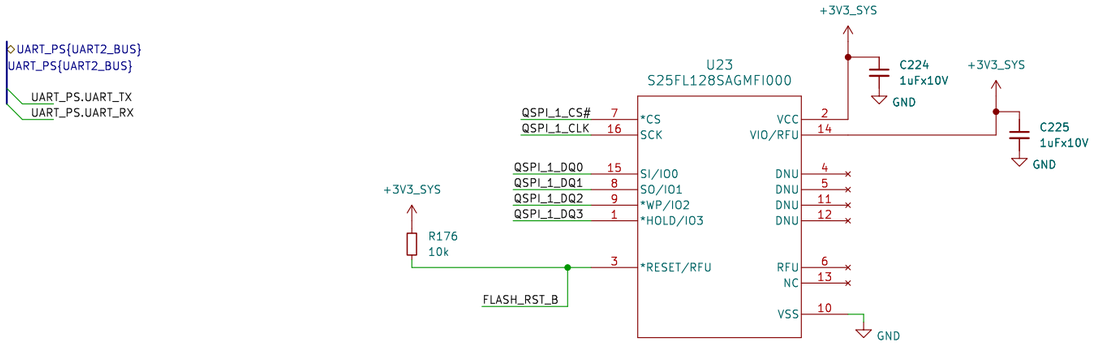

Table 6-4: **Boot Mode MIO Strapping Pins**

Pin-signal / Mode	MIO[8]	MIO[7]	MIO[6]	MIO[5]	MIO[4]	MIO[3]	MIO[2]
	VMODE[1]	VMODE[0]	BOOT_MODE[4]	BOOT_MODE[0]	BOOT_MODE[2]	BOOT_MODE[1]	BOOT_MODE[3]
Boot Devices							
JTAG Boot Mode; cascaded is most common[1]				0	0	0	**JTAG Chain Routing[2]** 0: Cascade mode 1: Independent mode
NOR Boot[3]				0	0	1	
NAND				0	1	0	
Quad-SPI[3]				1	0	0	
SD Card				1	1	0	
Mode for all 3 PLLs							
PLL Enabled			0	Hardware waits for PLL to lock, then executes BootROM.			
PLL Bypassed			1	Allows for a wide PS_CLK frequency range.			
MIO Bank Voltage[4]							
	Bank 1	**Bank 0**	Voltage Bank 0 includes MIO pins 0 thru 15. Voltage Bank 1 includes MIO pins 16 thru 53.				
2.5 V, 3.3 V	0	0					
1.8 V	1	1					

Notes:

1. JTAG cascaded mode is most common and is the assumed mode in all the references to JTAG mode except where noted.
2. For secure mode, JTAG is not enabled and MIO[2] is ignored.
3. The Quad-SPI and NOR boot modes support execute-in-place (this support is always non-secure)
4. Voltage Banks 0 and 1 must be set to the same value when an interface spans across these voltage banks. Examples include NOR, 16-bit NAND, and a wide TPIU test port. Other interface configuration may also span the two banks.

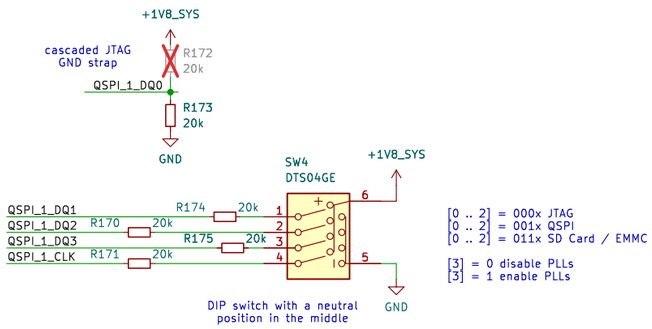

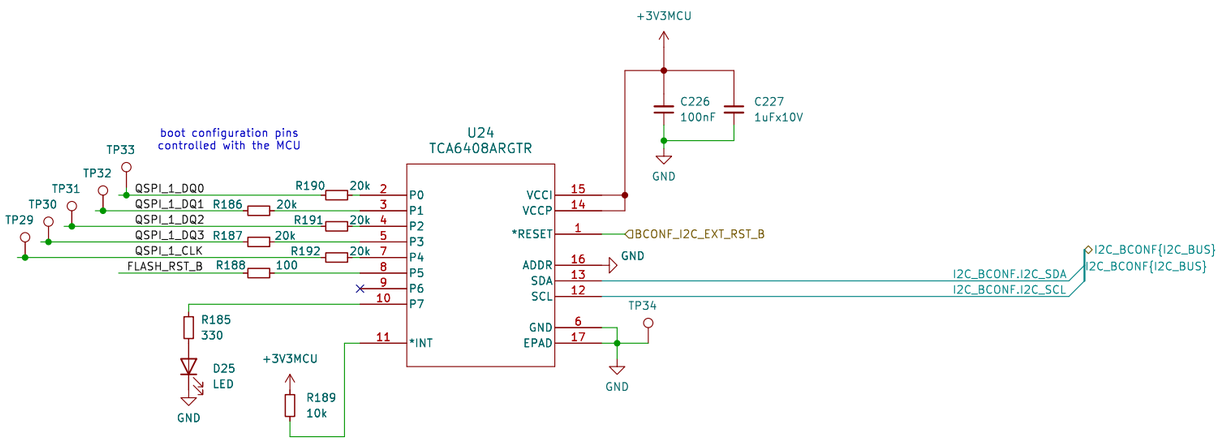

SYZYGY Carrier Mainboard
Author: Nazim Aghabayov
(c) Nazim 2025
Bank 500; QSPI / Boot mode switches / POR
electrodyssey.net

electrodyssey.net

Sheet: /SOC B500 POR QSPI/
File: soc_bank500.kicad_sch

Title: NASR-M

rel: Fletched Bustard

Size: A3 | Date: 2025-10-21 | **Rev: D 0.9.4**
KiCad E.D.A. 9.0.5 | Id: 9/20

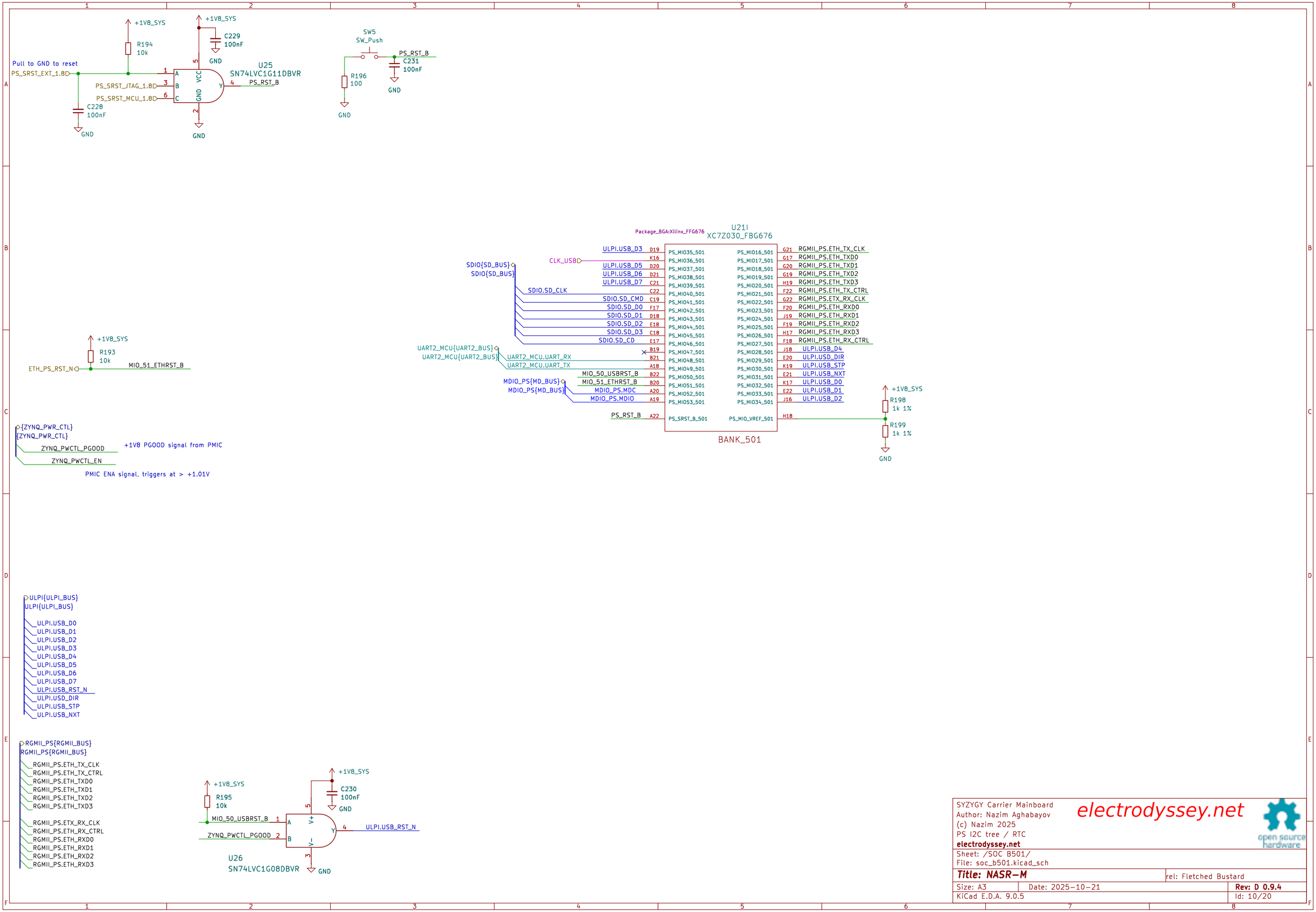

SYZYGY Carrier Mainboard
Author: Nazim Aghabayov
(c) Nazim 2025
PS I2C tree / RTC
electrodyssey.net

Sheet: /SOC B501/
File: soc_b501.kicad_sch

Title: NASR-M

rel: Fletched Bustard

Size: A3 | Date: 2025-10-21 | **Rev: D 0.9.4**

KiCad E.D.A. 9.0.5 | Id: 10/20

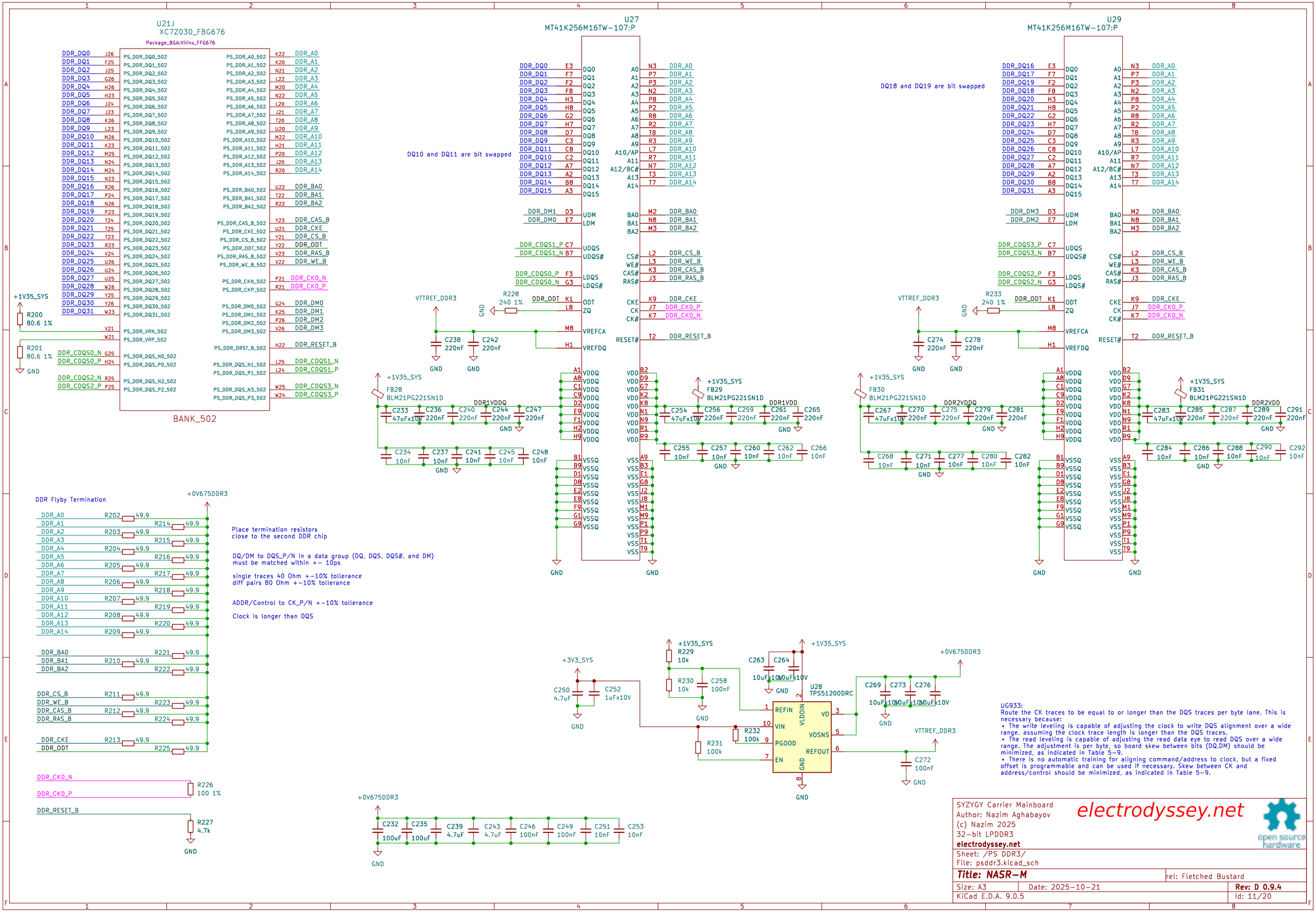
U21J
XC7Z030_FBG676
Package_BGA:Xilinx_FFG676
BANK_502
U27
MT41K256M16TW-107:P
U29
MT41K256M16TW-107:P
DQ10 and DQ11 are bit swapped
DQ18 and DQ19 are bit swapped
DDR Flyby Termination
+0V675DDR3
Place termination resistors
close to the second DDR chip
DQ/DM to DQS_P/N in a data group (DQ, DQS, DQS#, and DM)
must be matched within +- 10ps
single traces 40 Ohm +-10% tollerance
diff pairs 80 Ohm +-10% tollerance
ADDR/Control to CK_P/N +-10% tollerance
Clock is longer than DQS
U28
TPS51200DRC
UG933:
Route the CK traces to be equal to or longer than the DQS traces per byte lane. This is
necessary because:
• The write leveling is capable of adjusting the clock to write DQS alignment over a wide
range, assuming the clock trace length is longer than the DQS traces.
• The read leveling is capable of adjusting the read data eye to read DQS over a wide
range. The adjustment is per byte, so board skew between bits (DQ,DM) should be
minimized, as indicated in Table 5-9.
• There is no automatic training for aligning command/address to clock, but a fixed
offset is programmable and can be used if necessary. Skew between CK and
address/control should be minimized, as indicated in Table 5-9.
SYZYGY Carrier Mainboard
Author: Nazim Aghabayov
(c) Nazim 2025
32-bit LPDDR3
electrodyssey.net
electrodyssey.net
Sheet: /PS DDR3/
File: psddr3.kicad_sch
Title: NASR-M
rel: Fletched Bustard
Size: A3
Date: 2025-10-21
Rev: D 0.9.4
KiCad E.D.A. 9.0.5
Id: 11/20

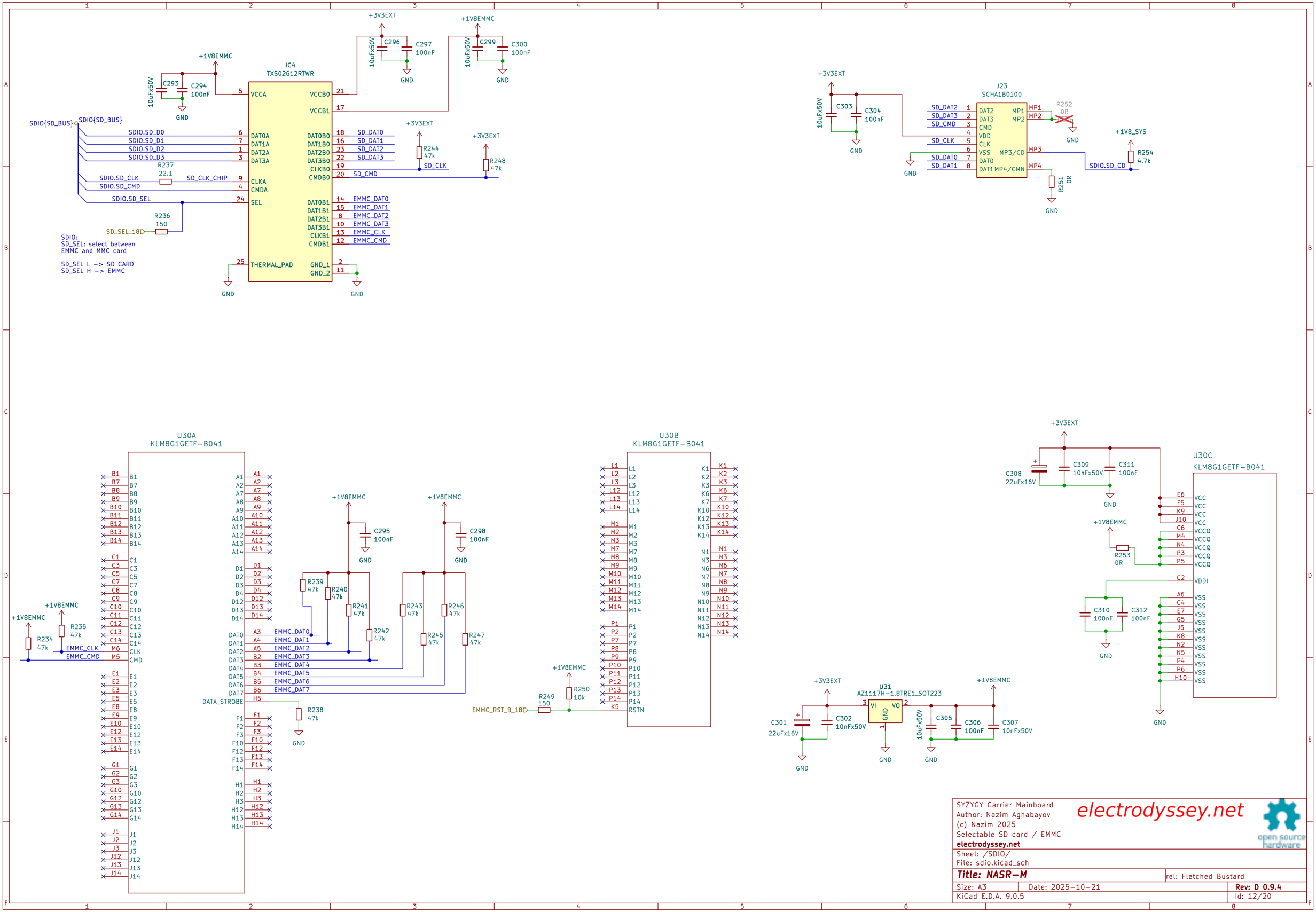

SYZYGY Carrier Mainboard
Author: Nazim Aghabayov
(c) Nazim 2025
Selectable SD card / EMMC
electrodyssey.net

electrodyssey.net

Sheet: /SDIO/
File: sdio.kicad_sch

Title: NASR-M

rel: Fletched Bustard

Size: A3 | Date: 2025-10-21 | **Rev: D 0.9.4**

KiCad E.D.A. 9.0.5 | Id: 12/20

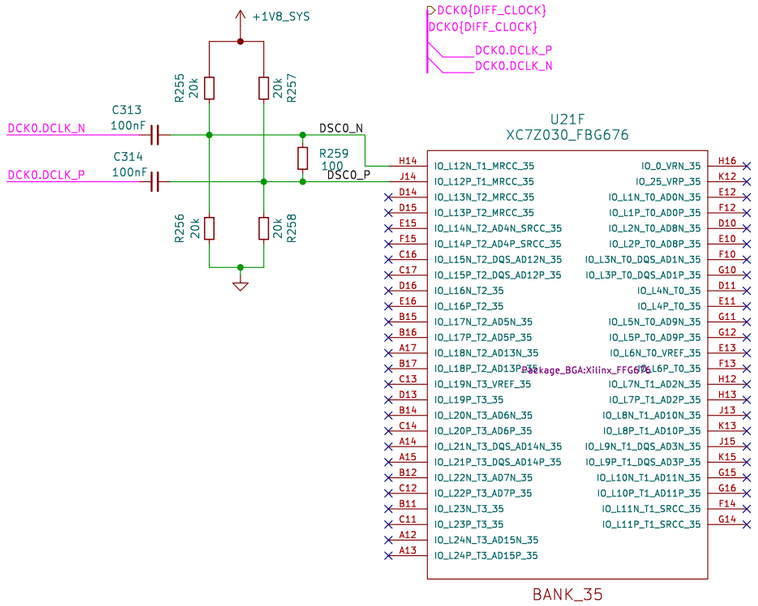

SYZYGY Carrier Mainboard
Author: Nazim Aghabayov
(c) Nazim 2025
Clock Generator pair 0 to MRCC
electrodyssey.net

electrodyssey.net

open source hardware

Sheet: /SOC B35/
File: soc_b35.kicad_sch

Title: NASR-M

rel: Fletched Bustard

Size: A3 | Date: 2025-10-21 | **Rev: D 0.9.4**

KiCad E.D.A. 9.0.5 | Id: 13/20

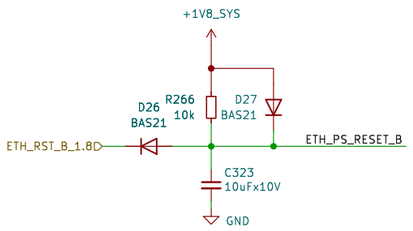

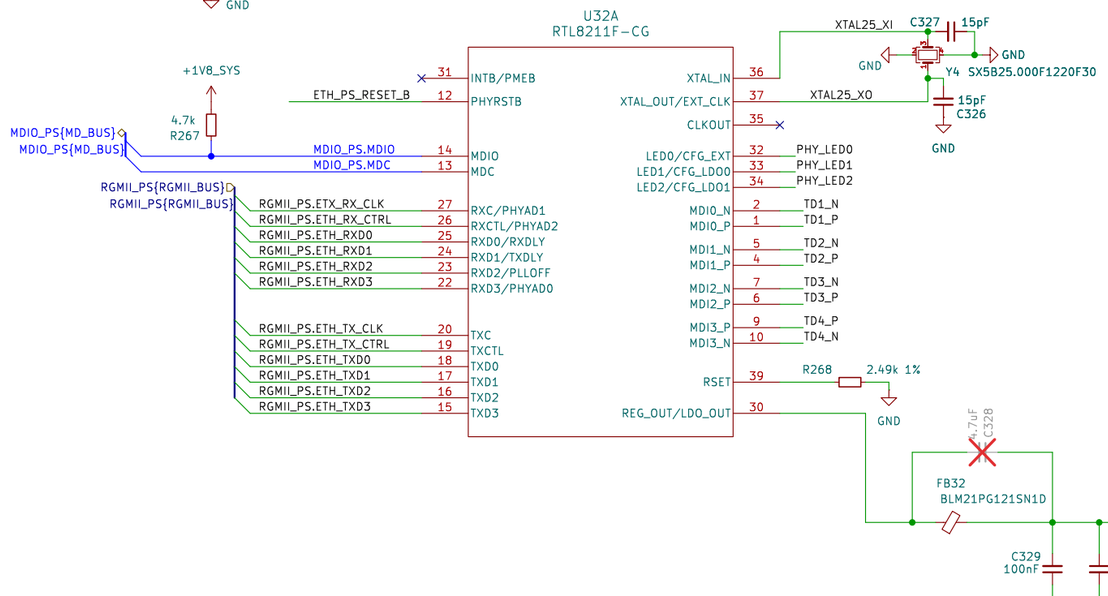

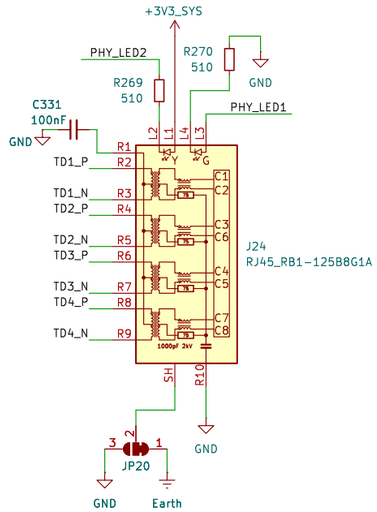

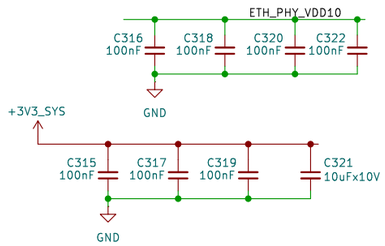

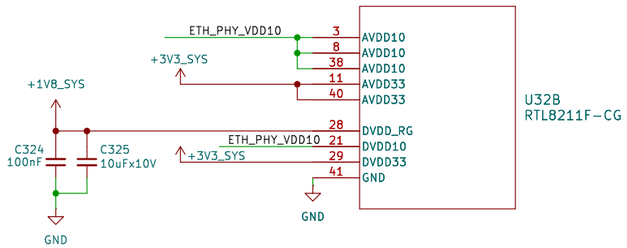

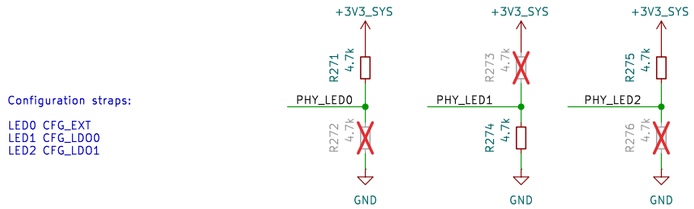

Table 10. CONFIG Pins vs. Configuration Register

CONFIG Pin	Configuration
RXD3	PHYAD[0]
RXC	PHYAD[1]
RXCTL	PHYAD[2]
RXD2	PLLOFF
RXD1	TXDLY
RXD0	RXDLY
LED0	CFG_EXT
LED1	CFG_LDO[0]
LED2	CFG_LDO[1]

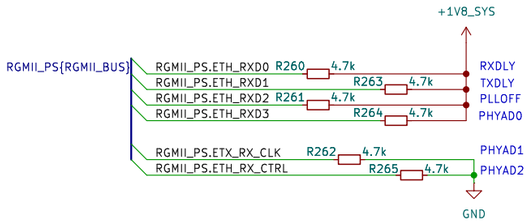

Table 11. Configuration Register Definitions

Configuration	Description
PHYAD[2:0]	PHY Address. PHYAD sets the PHY address for the device. The RTL8211F(I)/ RTL8211FD(I) supports PHY addresses from 00001 to 00111. *Note 1: An MDIO command with PHY address=0 is a broadcast from the MAC; each PHY device should respond. This function can be disabled by setting Reg24.13=0 (See Table 37).* *Note 2: The RTL8211F(I)/ RTL8211FD(I) with PHYAD[2:0]=000 can automatically remember the first non-zero PHY address. This function can be enabled by setting Reg24.6 = 1 (See Table 37).*
PLLOFF	ALDPS Mode PLL Off Configuration. 1: Stop PLL when entering ALDPS mode (via 4.7k-ohm to DVDD_RG) 0: PLL continue toggling when entering ALDPS mode (via 4.7k-ohm to GND)
TXDLY	RGMII Transmit Clock Timing Control. 1: Add 2ns delay to RXC for RXD latching (via 4.7k-ohm to DVDD_RG) 0: No delay (via 4.7k-ohm to GND)
RXDLY	RGMII Receive Clock Timing Control. 1: Add 2ns delay to RXC for RXD latching (via 4.7k-ohm to DVDD_RG) 0: No delay (via 4.7k-ohm to GND)
CFG_EXT	I/O Pad External Power Source Mode Configuration. 1: Use the external power source for the IO pad (via 4.7k-ohm to 3.3V) 0: Use the integrated LDO to transform the desired voltage for the IO pad (via 4.7k-ohm to GND)

32	CFG_EXT	O/LI/PD	IO Pad External Power Source Mode Configuration. Pull up to use the external power source for the IO pad. Pull down to use the integrated LDO to transform the desired voltage for the IO pad.
33	CFG_LDO0	O/LI/PU	LDO Output Voltage Selection for I/O Pad/
34	CFG_LDO1	O/LI/PD	External Power Source Voltage Selection for I/O Pad. When pulling down CFG_EXT pin, CFG_LDO[1:0] represent LDO output voltage setting for IO pad: 2'b00: Reserved. 2'b01: 2.5V. 2'b10: 1.8V. 2'b11: 1.5V. When pulling up CFG_EXT pin, CFG_LDO[1:0] stand for input voltage selection of the external power for IO pad: 2'b00: 3.3V. 2'b01: 2.5V. 2'b10: 1.8V. 2'b11: 1.5V.

Author: Nazim Aghabayov
(c) Nazim 2025

electrodyssey.net

open source hardware

electrodyssey.net

Sheet: /Ethernet PS/
File: eth_ps.kicad_sch

Title: NASR-M rel: Fletched Bustard

Size: A3 Date: 2025-10-21 **Rev: D 0.9.4**
KiCad E.D.A. 9.0.5 Id: 14/20

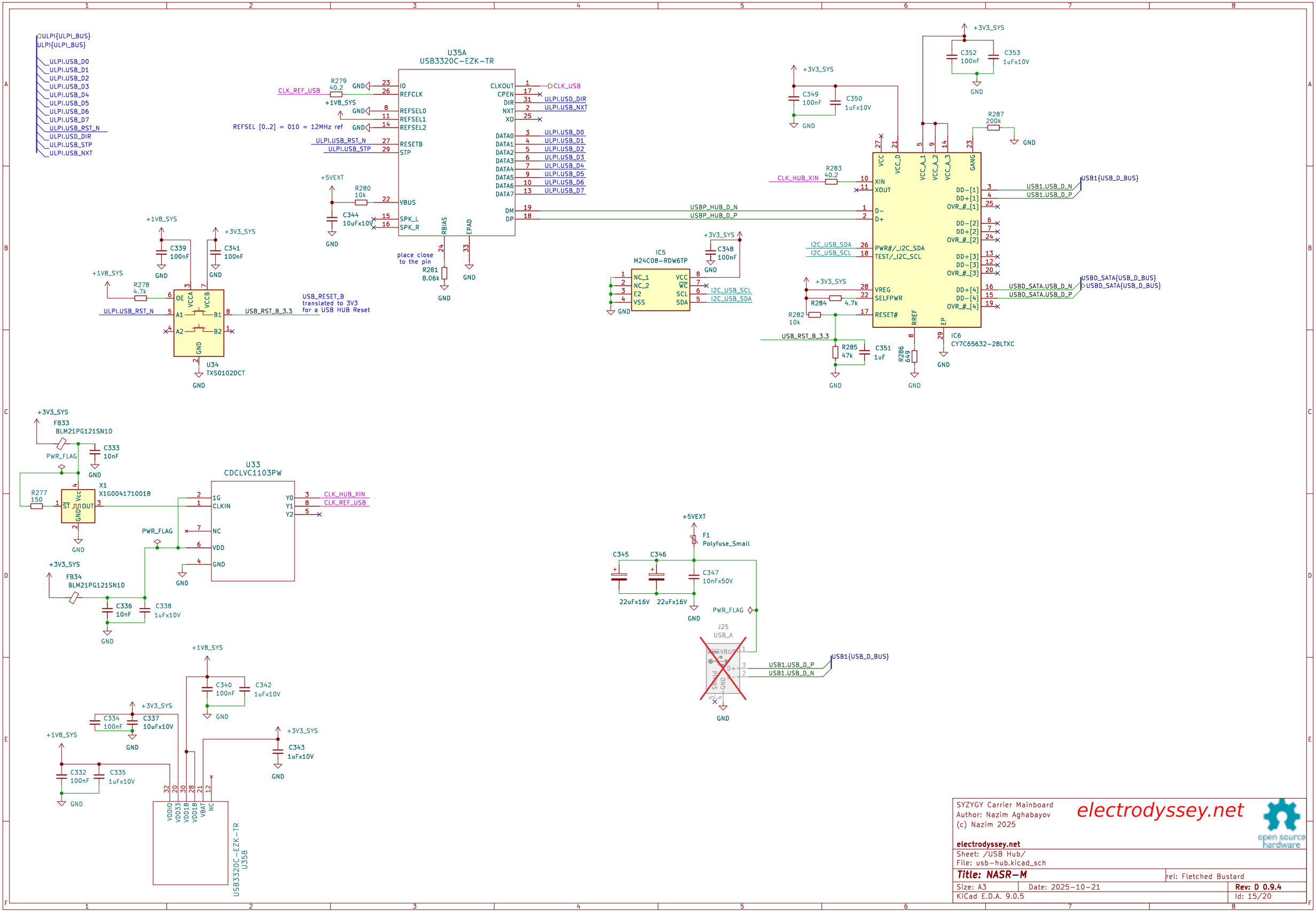

SYZYGY Carrier Mainboard
Author: Nazim Aghabayov
(c) Nazim 2025

electrodyssey.net

open source hardware

electrodyssey.net

Sheet: /USB Hub/
File: usb-hub.kicad_sch

Title: NASR-M | rel: Fletched Bustard

Size: A3 | Date: 2025-10-21 | **Rev: D 0.9.4**

KiCad E.D.A. 9.0.5 | Id: 15/20

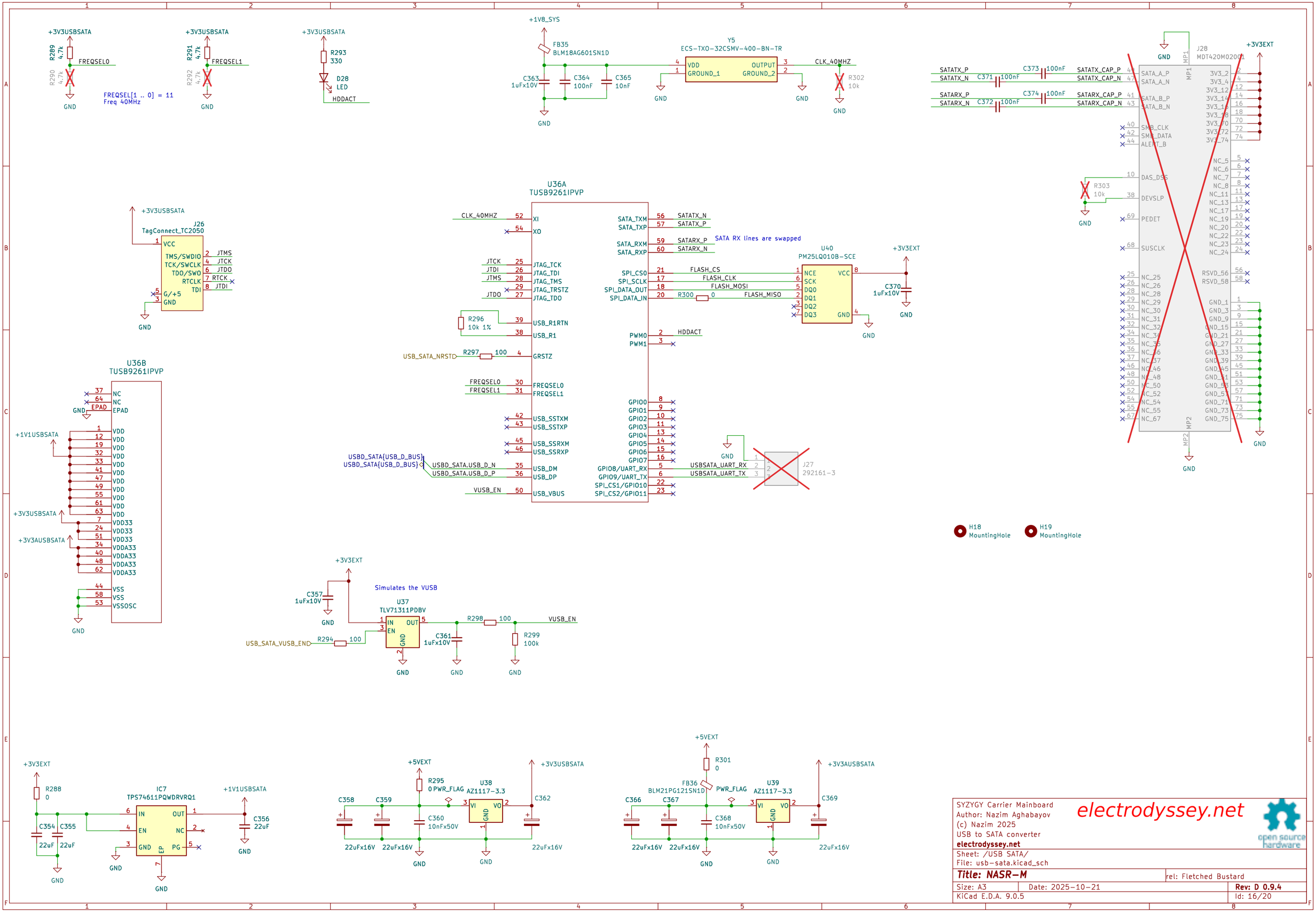

SYZYGY Carrier Mainboard
Author: Nazim Aghabayov
(c) Nazim 2025
USB to SATA converter
electrodyssey.net

electrodyssey.net

Sheet: /USB SATA/
File: usb-sata.kicad_sch

Title: NASR-M

rel: Fletched Bustard

Size: A3 | Date: 2025-10-21 | **Rev: D 0.9.4**
KiCad E.D.A. 9.0.5 | Id: 16/20

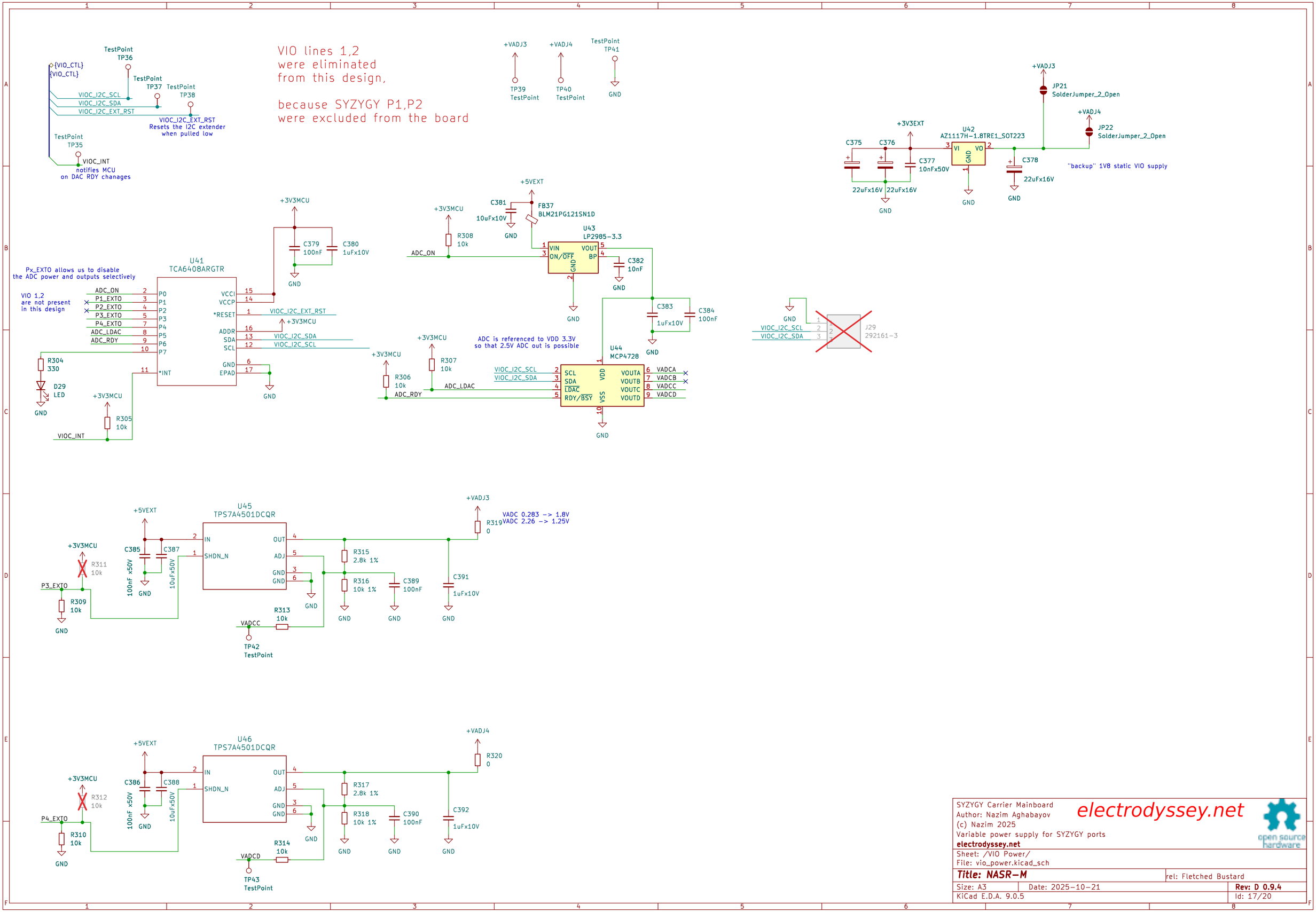

SYZYGY Carrier Mainboard
Author: Nazim Aghabayov
(c) Nazim 2025
Variable power supply for SYZYGY ports
electrodyssey.net

electrodyssey.net

open source hardware

Sheet: /VIO Power/
File: vio_power.kicad_sch

Title: NASR-M

rel: Fletched Bustard

Size: A3 | Date: 2025-10-21 | **Rev: D 0.9.4**
KiCad E.D.A. 9.0.5 | Id: 17/20

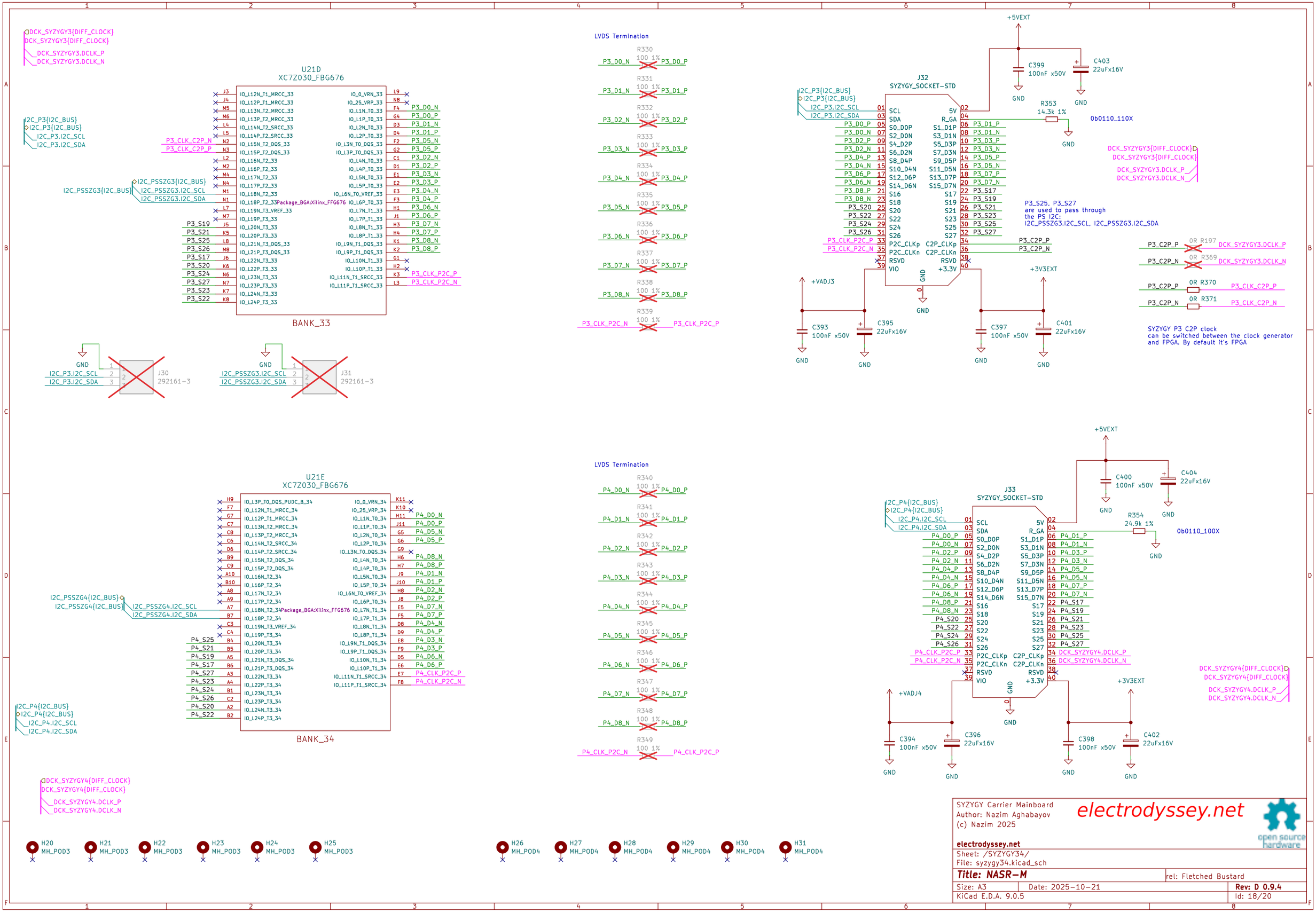

SYZYGY Carrier Mainboard
Author: Nazim Aghabayov
(c) Nazim 2025

electrodyssey.net

electrodyssey.net

Sheet: /SYZYGY34/
File: syzygy34.kicad_sch

Title: NASR-M | rel: Fletched Bustard

Size: A3 | Date: 2025-10-21 | **Rev: D 0.9.4**
KiCad E.D.A. 9.0.5 | Id: 18/20

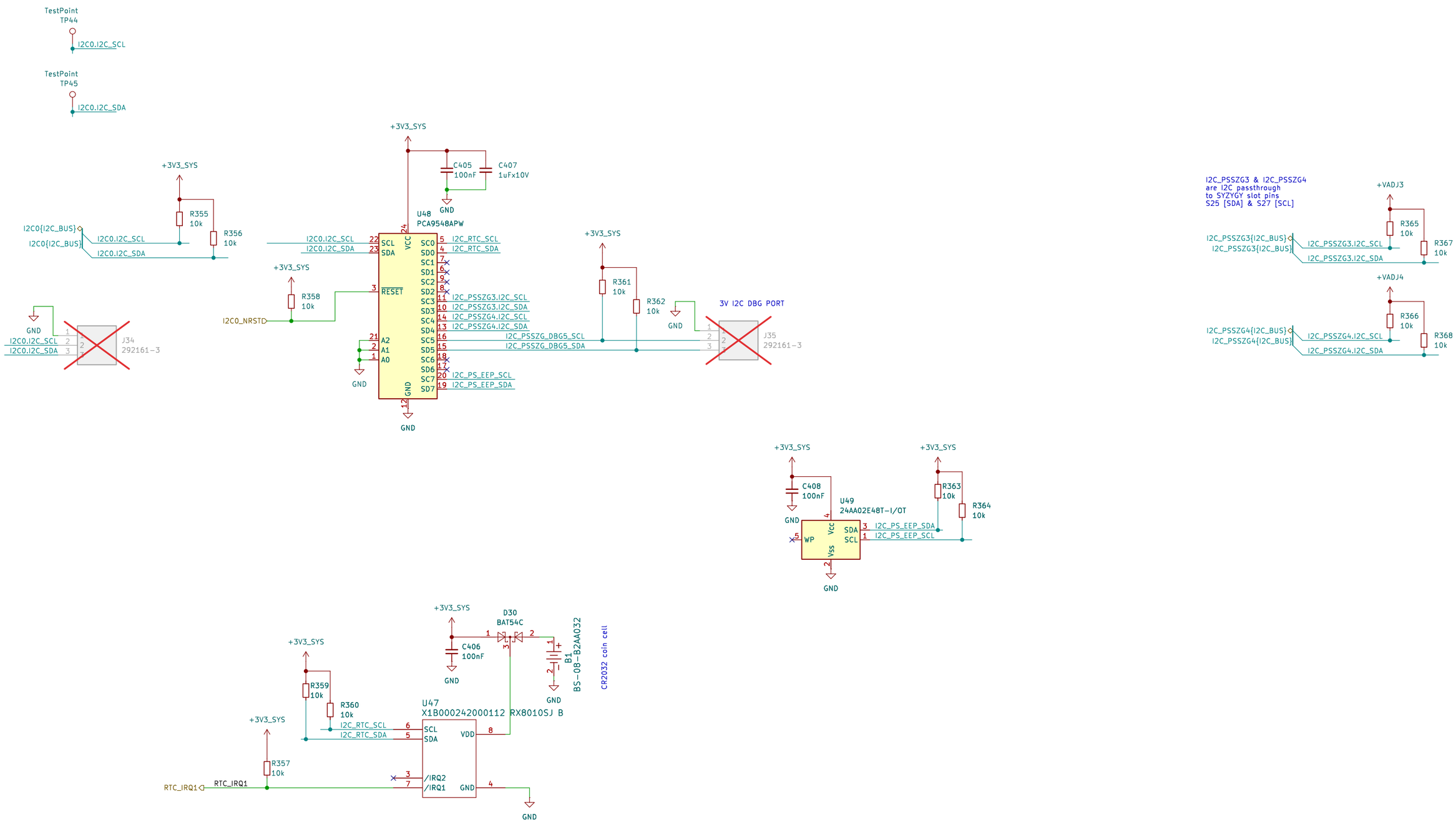

SYZYGY Carrier Mainboard
Author: Nazim Aghabayov
(c) Nazim 2025

electrodyssey.net

electrodyssey.net

Sheet: /SOC I2C/
File: soc_i2c.kicad_sch

Title: NASR-M

rel: Fletched Bustard

Size: A3 | Date: 2025-10-21 | **Rev: D 0.9.4**

KiCad E.D.A. 9.0.5 | Id: 19/20

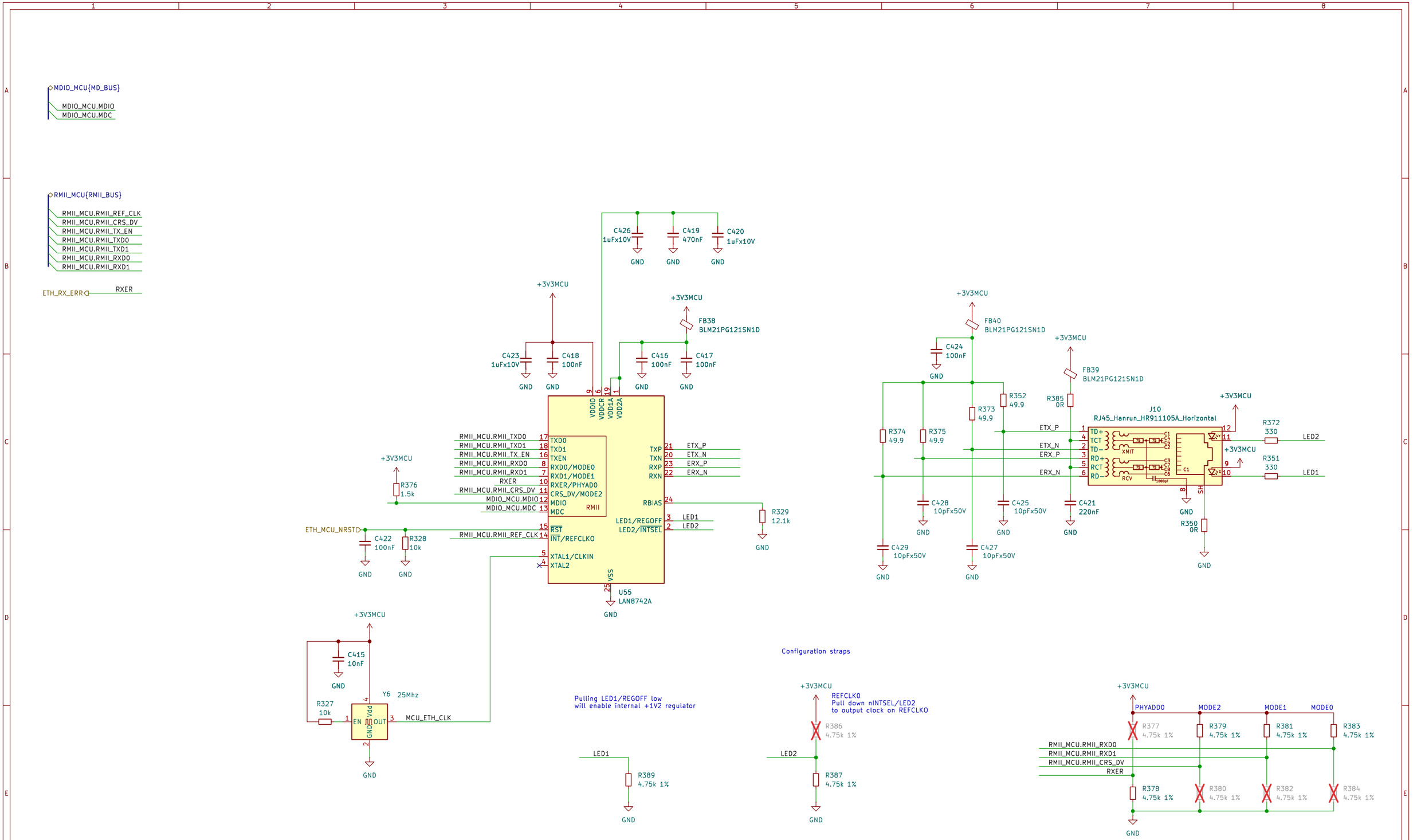

Author: Nazim Aghabayov
(c) Nazim 2025

electrodyssey.net

electrodyssey.net

open source hardware

Sheet: /Ethernet MCU/
File: eth_mcu.kicad_sch

Title: NASR-M		rel: Fletched Bustard
Size: A3	Date: 2025-10-21	**Rev: D 0.9.4**
KiCad E.D.A. 9.0.5		Id: 20/20