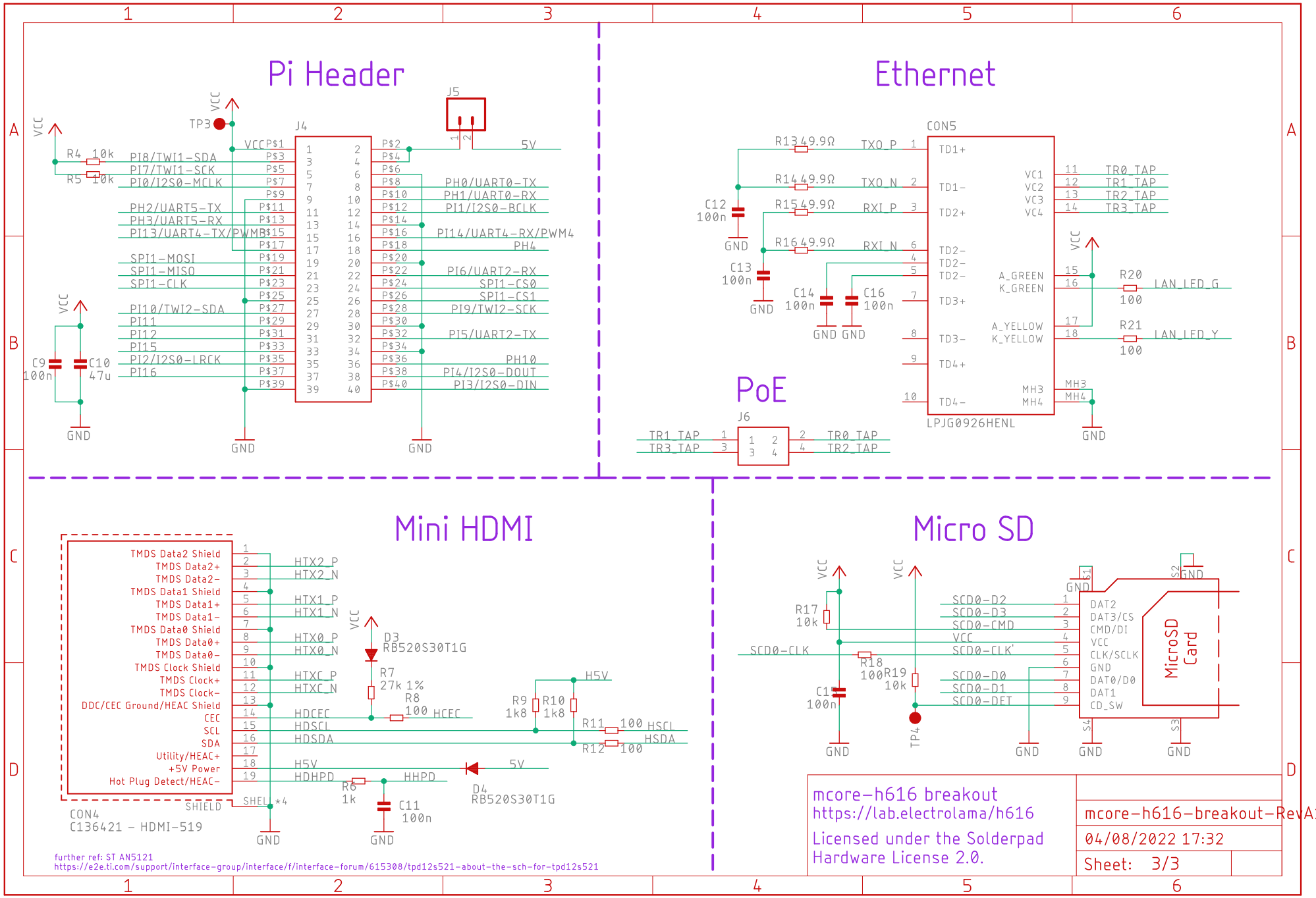
Pi Header
Ethernet
PoE
Mini HDMI
Micro SD
J4
J5
J6
CON5
LPJG0926HENL
CON4
C136421 - HDMI-519
MicroSD Card
mcore-h616 breakout
https://lab.electrolama/h616
Licensed under the Solderpad Hardware License 2.0.
mcore-h616-breakout-RevA1
04/08/2022 17:32
Sheet: 3/3
further ref: ST AN5121
https://e2e.ti.com/support/interface-group/interface/f/interface-forum/615308/tpd12s521-about-the-sch-for-tpd12s521