REV.	DESCRIPTION	DATE
1.0	PRELIMINARY	2009/06/11
2.0	改尺寸	2009/06/23
3.0	改LCD和铁框	2009/12/24

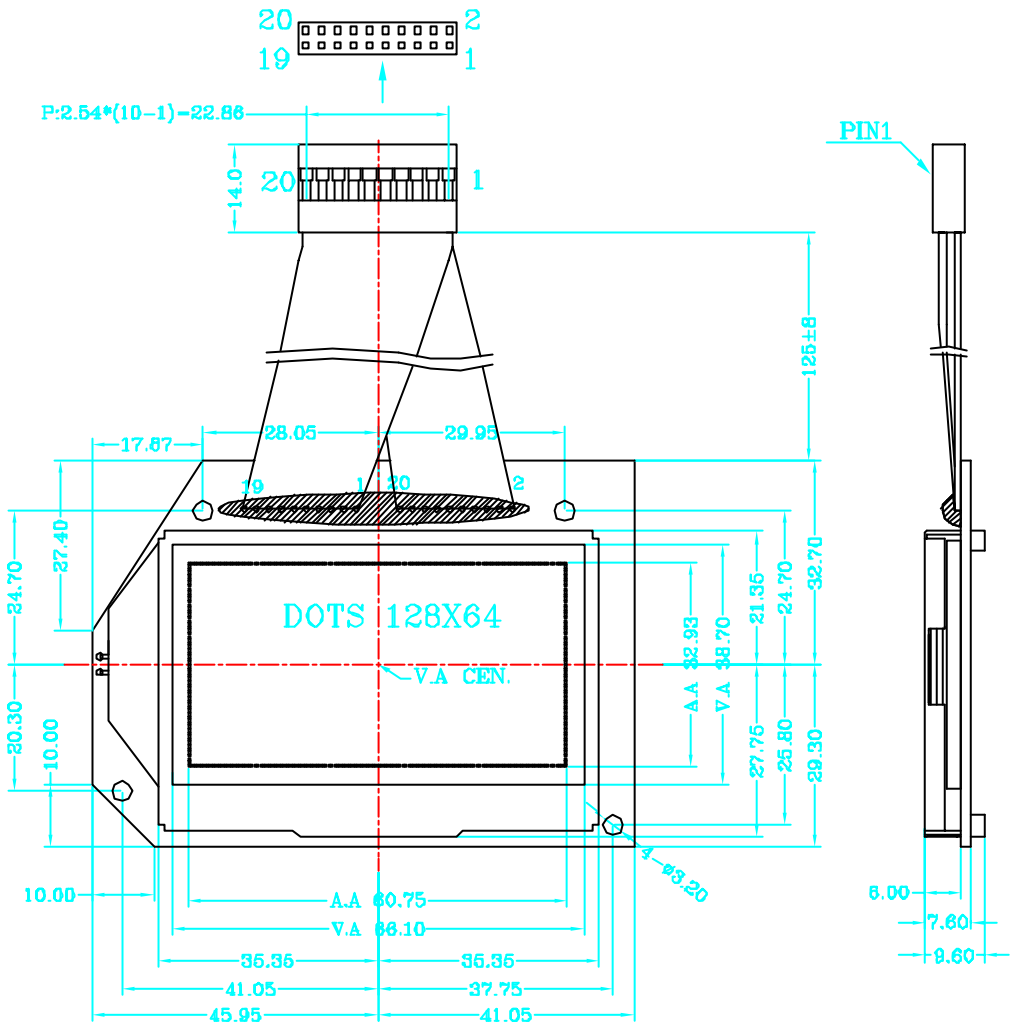

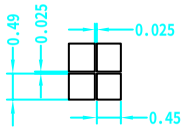

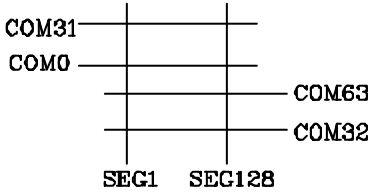

1.ALL DIMENSIONS ARE IN mm WITH ±0.3
TOLERANCE UNLESS OTHERWISE SPECIFIED.
2.VIEWING ANGLE: 6:00 O'CLOCK.
3.VIEWING MODE: POSITIVE, TRANSMISSIVE.
4.DISPLAY TYPE : STN(Y/G)
5.FLUID SPECIFICATION:
LCM SUPPLY VOLTAGE: 3.0V
LED BACKLIGHT SUPPLY VOLTAGE: 3.3V (GREEN)
MULTIPLEX LEVEL: 1/65 DUTY, 1/9 BIAS
OPERATING TEMP. : -10°C -- +60°C
STORAGE TEMP. : -20°C -- +60°C

1	2	3	4	5	6	7	8	9	10	11	12	13	14	15	16	17	18	19	20
NC	CS1	RST	A0	R/W	E	DB0	DB1	DB2	DB3	DB4	DB5	DB6	DB7	VDD	VSS	BLK	BLA	NC	NC

BRILLIANT DISPLAY

ENGR MANAGER: CHENHING	
DESIGNED BY: JQY	DATE: 2009/12/24
DRAWING TITLE: CUSTOM LCM	
DRAWING NUMBER: VTM88870B-WX	REV: 3.0
SCALE:	SHEET: 1 OF 1