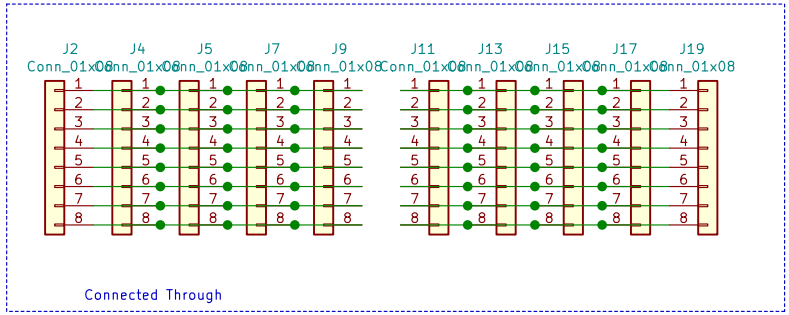

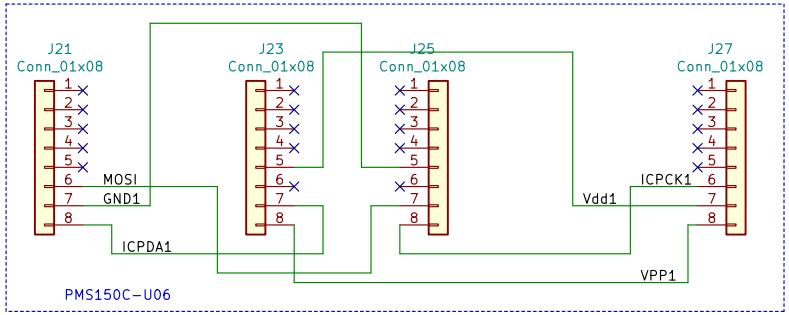

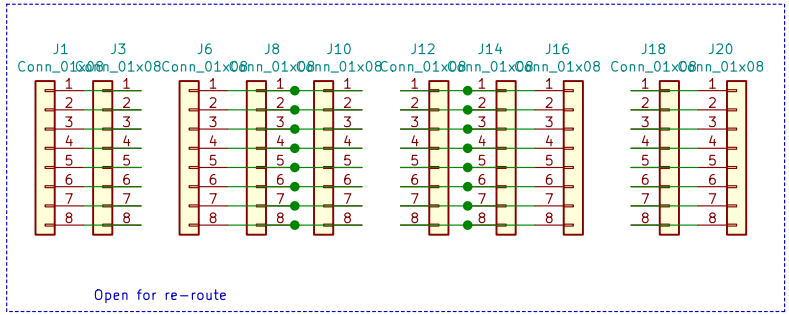

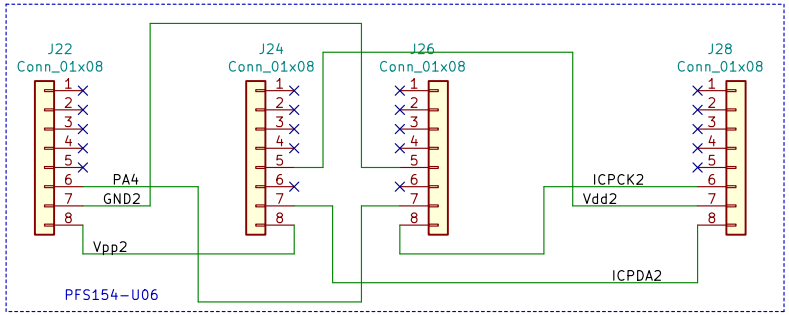

Sheet: /
File: programming-adapter.sch

Title:

Size: A4	Date:	Rev:
KiCad E.D.A. kicad 5.1.2-1.fc29		Id: 1/1