Rotary Encoder (Bourns): R51/R52/R53/R54=10K, R23/R24, 0 ohm, C3/C2=0.01uF

Joystick: OpAmp R23/R24=0 ohm

Nav Switch: R41/R42/R43/R44=1M ohm No OpAmp

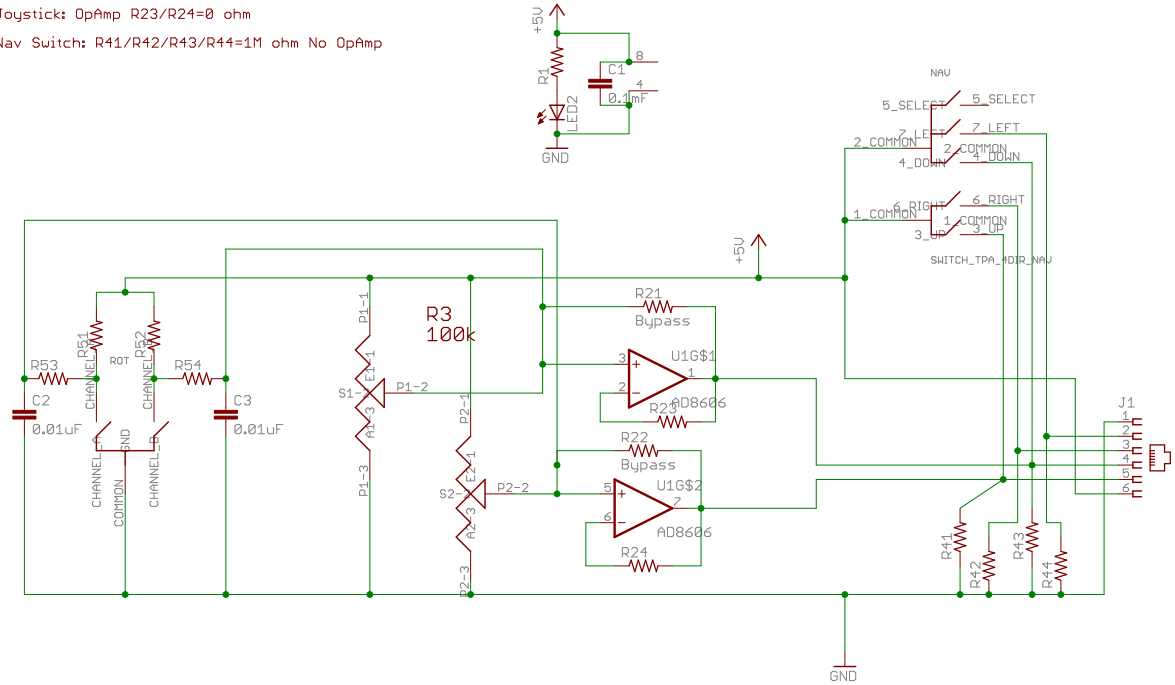

Joystick/Nav Switch/Rotary Encoder

TITLE: ELE-T305	
Document Number:	REV: A
Date: 2/2/07 10:30 PM	Sheet: 1/1