REV.	DATE	REVISION ORIGINOR	SIGN	ISSUED
A				
B				

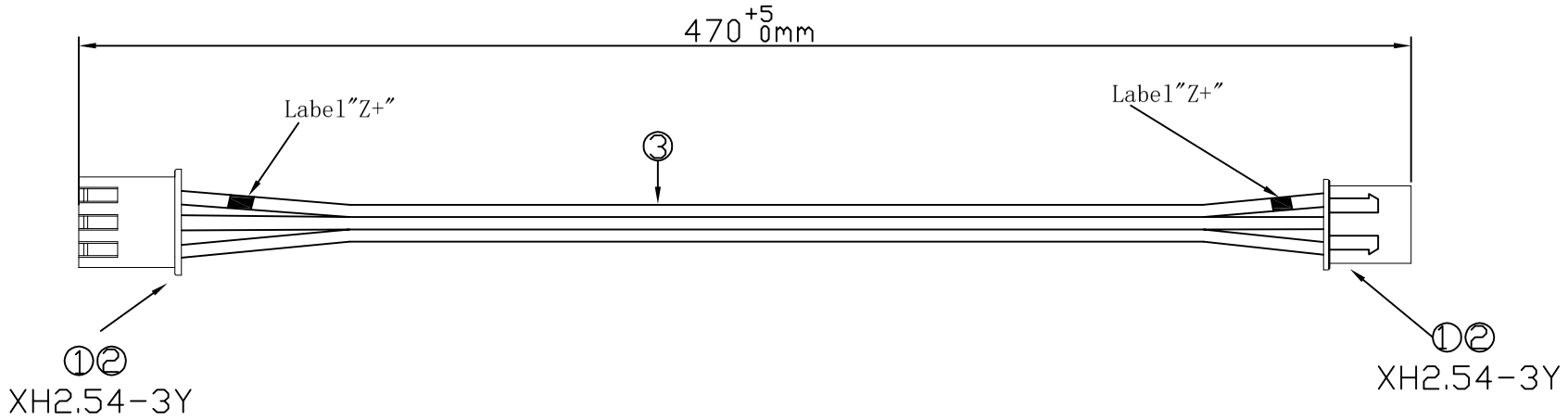

NO.	NAME	MODEL	QUANTITY	APPROVALS		DATE
3	Wire	1007/24AWG_3P parallel wire_11/0.14+0.008TS_black	XXmm			
2	Housing	XH2.54-3Y_white	2PCS	DRAWN		
1	Terminal	XH2.54-T	6PCS	CHECKED		
				ISSUED		

ELEGOO 深圳市智能派科技有限公司
Shenzhen Elegoo Technology Co.,Ltd

PART NAME: Photoelectric Switch Wire	MATERIAL: Tinned Copper	
DRAWING NO.: Neptune 3-DX-006	SIZE: A4 / SCALE: 1:1	REV.: B
	UNIT: MM	SHEET 1 OF 1