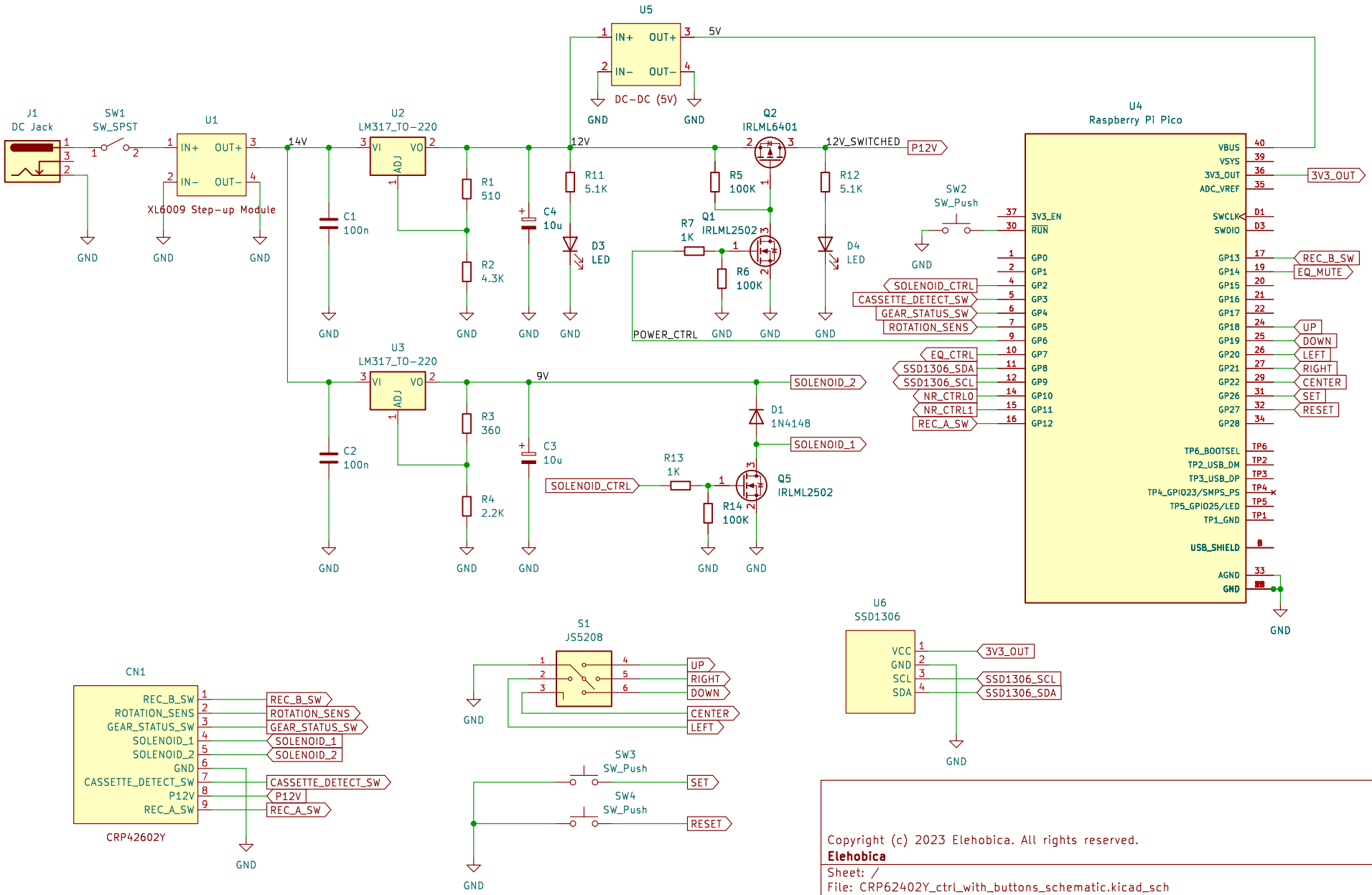

Copyright (c) 2023 Elehobica. All rights reserved.

Elehobica

Sheet: /

File: CRP62402Y_ctrl_with_buttons_schematic.kicad_sch

Title: CRP42602Y Control with buttons

Size: A4	Date: 2024-10-09	**Rev: 1.0.2**
KiCad E.D.A. eeschema 7.0.7		Id: 1/1