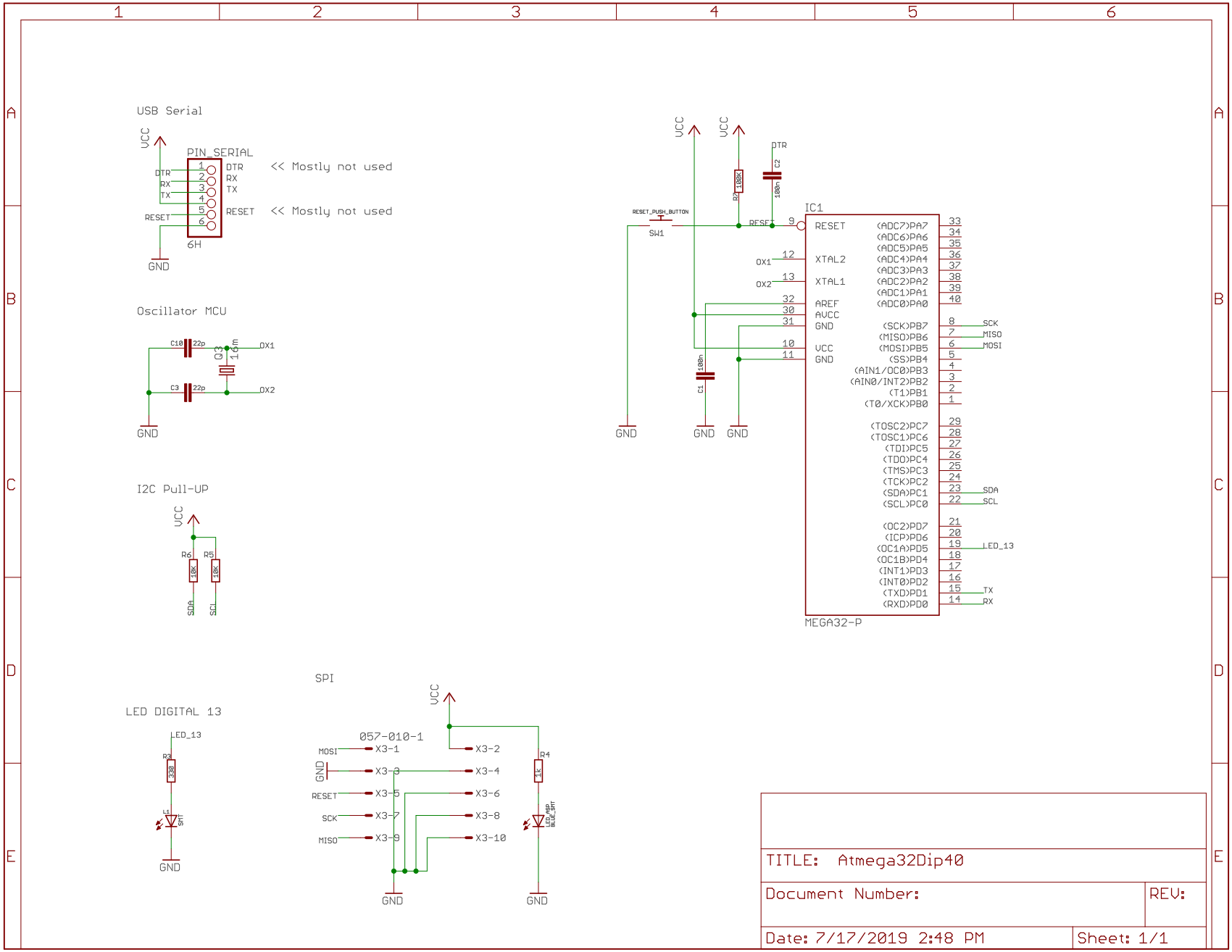

TITLE: Atmega32Dip40

Document Number:

REV:

Date: 7/17/2019 2:48 PM

Sheet: 1/1