Micron 7450 SSD Series Technical Product Specification

For additional technical and warranty information, contact your Micron sales representative.

Features

- Micron® 3D TLC NAND Flash
- PCI Express Gen4
  - M.2 single port (x4)
  - EDSFF E1.S single port (x4)
- NVM Express 1.4b
  - Number of name spaces supported: 132
  - Weighted round robin with urgent arbitration supported
- TCG Storage Security Subsystem Class: Opal Rev 2.01
- Capacity (unformatted)
  - 7450 PRO M.2 2280: 480GB, 960GB
  - 7450 PRO M.2 22110: 960GB, 1920GB, 3840GB
  - 7450 PRO E1.S: 960GB, 1920GB, 3840GB, 7680GB
  - 7450 MAX M.2 2280: 400GB, 800GB
  - 7450 MAX M.2 22110: 800GB, 1600GB, 3200GB
  - 7450 MAX E1.S: 800GB, 1600GB, 3200GB, 6400GB
- Endurance: Total bytes written (TBW)
  - 7450 PRO: Up to 28,000TB at 1 DWPD
  - 7450 MAX: Up to 70,000TB at 3 DWPD
- Enterprise sector size support = 512 and 4096-byte sector size (configurable)
- Security: Digitally signed firmware
- Surprise insertion/surprise removal (SISR) and hot-plug capable
- Self-monitoring, analysis, and reporting technology (SMART)
- Performance[1]
  - Sequential 128KB READ: Up to 6800 MB/s
  - Sequential 128KB WRITE: Up to 5600 MB/s
  - Random 4KB READ: Up to 1,000,000 IOPS
  - Random 4KB WRITE: Up to 400,000 IOPS
- Latency[2, 3]
  - READ (TYP): 80µs
  - WRITE (TYP): 15µs
- Reliability
  - MTTF: 2 million device hours[4]
  - Static and dynamic wear leveling
  - Uncorrectable bit error rate (UBER): <1 sector per 10^{17} bits read
  - End-to-end data protection
  - Full power-loss protection
- Operating temperature[5]
  - Commercial (0°C to +70°C)
- Field upgradeable firmware
- Form factor
  - EDSFF E1.S: 31.5 x 111.49 x 5.9mm
  - EDSFF E1.S: 31.5 x 111.49 x 15mm
  - EDSFF E1.S: 31.5 x 111.49 x 25mm
  - M.2: 22.00 x 80.00mm
  - M.2: 22.00 x 110.00mm
- Electrical specification
  - E1.S power supply: 12V ±10%
  - E1.S AUX supply: 3.3V ±5%
  - M.2 power supply: 3.3V ±5%

Notes:
1. Steady state as defined by SNIA Solid State Storage Performance Test Specification Enterprise v1.1.
2. 4KB, queue depth 1 transfers used for READ/WRITE latency values.
3. TYP: Median, 50th percentile
4. Product achieves MTTF based on population statistics not relevant to individual units.
5. Temperature measured by SMART.
6. Not all MAX configurations available in all markets. Contact your Micron sales representative for more information.

Micron Technology, Inc. reserves the right to change products or specifications without notice.
©2023 Micron Technology, Inc.. All rights reserved.

Products and specifications discussed herein are subject to change by Micron without notice.

Part Numbering Information

Micron 7450 SSDs are available in different configurations and capacities. The chart below is a comprehensive list of options; not all options listed can be combined to define an offered product. Visit https://www.micron.com for a list of valid part numbers.

Figure 1: Part Number Chart

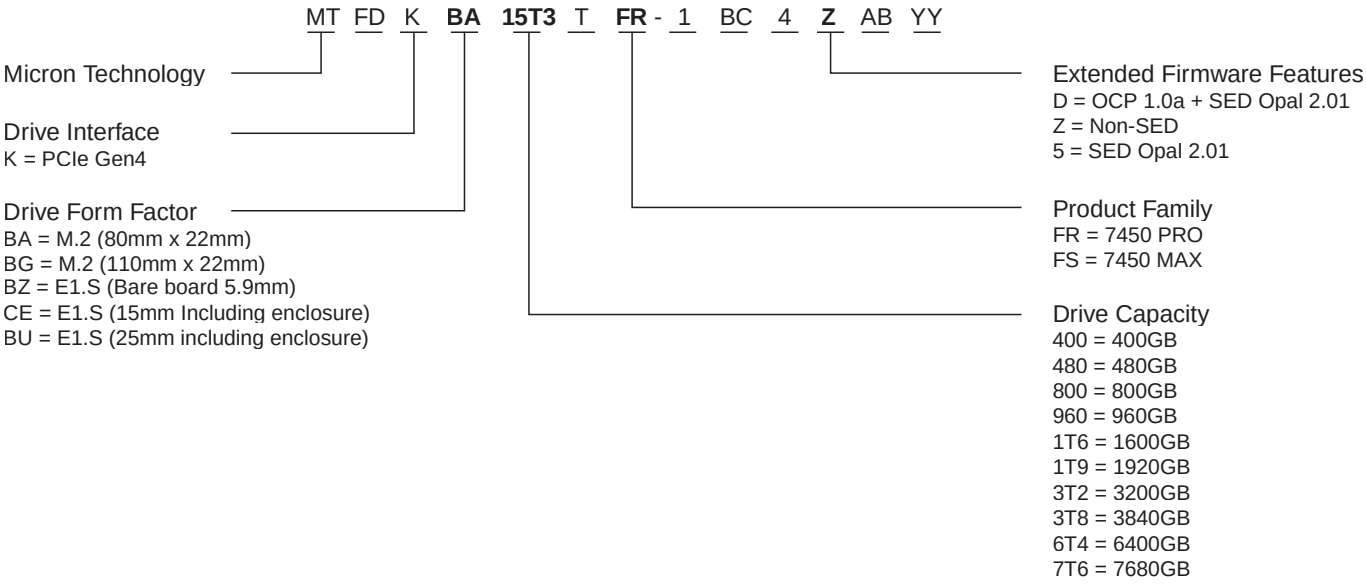

Micron Technology, Inc. reserves the right to change products or specifications without notice.
©2023 Micron Technology, Inc.. All rights reserved.

Important Notes and Warnings

Micron Technology, Inc. ("Micron") reserves the right to make changes to information published in this document, including without limitation specifications and product descriptions. This document supersedes and replaces all information supplied prior to the publication hereof. You may not rely on any information set forth in this document if you obtain the product described herein from any unauthorized distributor or other source not authorized by Micron.

Automotive Applications. Products are not designed or intended for use in automotive applications unless specifically designated by Micron as automotive-grade by their respective data sheets. Distributor and customer/distributor shall assume the sole risk and liability for and shall indemnify and hold Micron harmless against all claims, costs, damages, and expenses and reasonable attorneys' fees arising out of, directly or indirectly, any claim of product liability, personal injury, death, or property damage resulting directly or indirectly from any use of non-automotive-grade products in automotive applications. Customer/distributor shall ensure that the terms and conditions of sale between customer/distributor and any customer of distributor/customer (1) state that Micron products are not designed or intended for use in automotive applications unless specifically designated by Micron as automotive-grade by their respective data sheets and (2) require such customer of distributor/customer to indemnify and hold Micron harmless against all claims, costs, damages, and expenses and reasonable attorneys' fees arising out of, directly or indirectly, any claim of product liability, personal injury, death, or property damage resulting from any use of non-automotive-grade products in automotive applications.

Critical Applications. Products are not authorized for use in applications in which failure of the Micron component could result, directly or indirectly in death, personal injury, or severe property or environmental damage ("Critical Applications"). Customer must protect against death, personal injury, and severe property and environmental damage by incorporating safety design measures into customer's applications to ensure that failure of the Micron component will not result in such harms. Should customer or distributor purchase, use, or sell any Micron component for any critical application, customer and distributor shall indemnify and hold harmless Micron and its subsidiaries, subcontractors, and affiliates and the directors, officers, and employees of each against all claims, costs, damages, and expenses and reasonable attorneys' fees arising out of, directly or indirectly, any claim of product liability, personal injury, or death arising in any way out of such critical application, whether or not Micron or its subsidiaries, subcontractors, or affiliates were negligent in the design, manufacture, or warning of the Micron product.

Customer Responsibility. Customers are responsible for the design, manufacture, and operation of their systems, applications, and products using Micron products. ALL SEMICONDUCTOR PRODUCTS HAVE INHERENT FAILURE RATES AND LIMITED USEFUL LIVES. IT IS THE CUSTOMER'S SOLE RESPONSIBILITY TO DETERMINE WHETHER THE MICRON PRODUCT IS SUITABLE AND FIT FOR THE CUSTOMER'S SYSTEM, APPLICATION, OR PRODUCT. Customers must ensure that adequate design, manufacturing, and operating safeguards are included in customer's applications and products to eliminate the risk that personal injury, death, or severe property or environmental damages will result from failure of any semiconductor component.

Limited Warranty. In no event shall Micron be liable for any indirect, incidental, punitive, special or consequential damages (including without limitation lost profits, lost savings, business interruption, costs related to the removal or replacement of any products or rework charges) whether or not such damages are based on tort, warranty, breach of contract or other legal theory, unless explicitly stated in a written agreement executed by Micron's duly authorized representative.

Micron Technology, Inc. reserves the right to change products or specifications without notice.
©2023 Micron Technology, Inc.. All rights reserved.

Performance

Measured performance can vary for a number of reasons. The major factors affecting drive performance are the capacity of the drive and the interface of the host. Additionally, overall system performance can affect the measured drive performance. When comparing drives, it is recommended that all system variables are the same, and only the drive being tested varies.

Performance numbers will vary depending on the host system configuration.

Table 1: Drive Performance – PRO

Parameter Power State 0	Capacity (GB)							
	M.2 (2280)	M.2 (2280/ 22110)	M.2 (22110)		E1.S (25mm/15mm/5.9mm)[1]			
	480	960	1920	3840	960	1920	3840	7680
Sequential (128KB transfer) (MB/s)								
Read	5000	5000	5000	5000	6800	6800	6800	6800
Write	700	1400	2400	2500	1400	2600	5000/ 4000[2]	5600/ 4000[2]
Random (4KB transfer) (IOPS)								
Read	280K	520K	735K	735K	530K	800K	1M	1M
Write	40K	82K	120K	160K	85K	120K	180K	215K
70/30 random read/write	50K	110K	185K	300K	110K	190K	300K	415K
Latency (µs)								
READ (TYP)	80	80	80	80	80	80	80	80
WRITE (TYP)	30	15	15	15	15	15	15	15
READ (99%)	95	95	90	90	95	90	90	90
WRITE (99%)	65	65	65	65	65	65	65	65

Notes: 1. E1.S 25mm and E1.S 15mm performance measured at 25W, E1.S 5.9mm measured at 12W
2. Reduced performance at 12W.
3. Performance values measured under the following conditions:
- Steady state as defined by SNIA Solid State Storage Performance Test Specification Enterprise v1.1
- 4K sector size
- Drive write cache enabled
- NVMe power state 0
- Sequential workloads measured using FIO with a queue depth of 32
- Random READ workloads measured using FIO with a queue depth of 256
- Random WRITE workloads measured using FIO with a queue depth of 128

Micron Technology, Inc. reserves the right to change products or specifications without notice.
©2023 Micron Technology, Inc.. All rights reserved.

Table 2: Drive Performance – MAX

Parameter Power State 0	Capacity (GB)							
	M.2 (2280)	M.2 (2280/ 22110)	M.2 (22110)		E1.S (25mm/15mm/5.9mm)[1]			
	400	800	1600	3200	800	1600	3200	6400
Sequential (128KB transfer) (MB/s)								
Read	5000	5000	5000	5000	6800	6800	6800	6800
Write	700	1400	2400	2500	1400	2600	5000/ 4000[2]	5600/ 4000[2]
Random (4KB transfer) (IOPS)								
Read	280K	520K	735K	735K	530K	800K	1M	1M
Write	65K	156K	250K	300K	145K	250K	390K	400K
70/30 random read/ write	78K	165K	270K	450K	165K	290K	500K	645K
Latency (µs)								
READ (TYP)	80	80	80	80	80	80	80	80
WRITE (TYP)	15	15	15	15	15	15	15	15
READ (99%)	95	95	90	90	95	90	90	90
WRITE (99%)	65	65	65	65	65	65	65	65

Notes: 1. E1.S 25mm and E1.S 15mm performance measured at 25W, E1.S 5.9mm measured at 12W

2. Reduced performance at 12W.
3. Performance values measured under the following conditions:
   - Steady state as defined by SNIA Solid State Storage Performance Test Specification Enterprise v1.1
   - 4K sector size
   - Drive write cache enabled
   - NVMe power state 0
   - Sequential workloads measured using FIO with a queue depth of 32
   - Random READ workloads measured using FIO with a queue depth of 256
   - Random WRITE workloads measured using FIO with a queue depth of 128
4. Performance values measured with the following system configuration:
   - Generic X570 motherboard
   - AMD Ryzen 73700X 8-Core CPU @ 2.6 GHz
   - DDR4 16GB @ 3200 MHz
5. Latency values measured under the following configuration:
   - Random workloads using FIO with 4KB transfers and a queue depth of 1
   - TYP = median, 50th percentile
6. System variations will affect measured results.

Micron Technology, Inc. reserves the right to change products or specifications without notice.
©2023 Micron Technology, Inc.. All rights reserved.

Endurance

While actual endurance varies depending on conditions, the drive lifetime can be estimated based on capacity, assumed fixed-use models, ECC, and formatted sector size.

Lifetime estimates for the device are shown in the following tables in total bytes written.

Table 3: Total Bytes Written

Model	Capacity (GB)	4K Random Total Bytes Written (TB)	128K Sequential Total Bytes Written (TB)
PRO	480	800	3550
	960	1700	6400
	1920	3650	12,800
	3840	7300	24,400
	7680	14,000	48,800
MAX	400	2100	4000
	800	4300	7800
	1600	8700	15,900
	3200	17,500	30,900
	6400	35,000	61,800

Notes: 1. Values represent the theoretical maximum endurance for the given transfer size and type. Actual lifetime will vary by workload. Refer to Percentage Used in the SMART/Health Information (Log Identifier 02h) to check the device life used.

2. Total bytes written calculated assuming drive is 100% full (user capacity) with workload of 100% random aligned 4KB writes.

Micron Technology, Inc. reserves the right to change products or specifications without notice.
©2023 Micron Technology, Inc.. All rights reserved.

Electrical Characteristics

Table 4: Power Consumption – PRO

Parameter Power State 0	Capacity (GB)								Unit
	M.2				E1.S				
	480	960	1920	3840	960	1920	3840	7680	
Active read (maximum RMS)	7	7	7.3	8.2	9.5	12	12	12	W
Active write (maximum RMS)	4.5	5.7	7.5	8.2	7	12	12/ 13.5[1]	12/ 15[1]	W
128K sequential read (average RMS)	7	7	8	7.9	9	11.3	11.5	12	W
128K sequential write (average RMS)	4.3	5.6	7.5	7.9	7	9	12/ 13	12/ 14	W
4K random read (average RMS)	4.3	5.5	7	8.2	7	8	10	11	W
4K random write (average RMS)	4.5	5.5	8	8	7	8.3	11.5	12	W
Idle (average RMS)	2.9	2.9	2.9	2.9	5	5	5	5	W

Notes: 1. Split indicates 12W/20W.
2. Power limiting is configured through Set/Get Features Power Management.
3. Power consumption measurements are for reference only; actual workload power consumption will vary.

Table 5: Power Consumption – MAX

Parameter Power State 0	Capacity (GB)								Unit
	M.2				E1.S				
	400	800	1600	3200	800	1600	3200	6400	
Active read (maximum RMS)	7.1	7.1	7.3	8.2	9.5	12	12	12	W
Active write (maximum RMS)	4.5	5.7	8.2	7	12	12.0	12/ 13.5[1]	12/ 15[1]	W
128K sequential read (average RMS)	7	7	8	7.9	9	11.3	11.5	12	W
128K sequential write (average RMS)	4.3	5.6	7.5	7.9	7	9	12/ 13	12/ 14	W
4K random read (average RMS)	4.3	5.5	7	8.2	7	8	10	11	W
4K random write (average RMS)	4.5	5.5	8	8	7	8.3	11.5	12	W
Idle (average RMS)	2.9	2.9	2.9	2.9	5	5	5	5	W

Notes: 1. Split indicates 12W/20W.
2. Power limiting is configured through Set/Get Features Power Management.
3. Power consumption measurements are for reference only; actual workload power consumption will vary.

Table 6: Operating Voltage – EDSFF

Power Rail	Electrical Parameter	Value
12V	Operating voltage	12 Vdc (±10%)
	MIN/MAX rise time	10ms/100ms
	Fall time	<5s
	MIN power-off time	50ms
	Inrush current (typical peak)	2.0A
	MAX average current (RMS)	1.2A

Micron Technology, Inc. reserves the right to change products or specifications without notice.
©2023 Micron Technology, Inc.. All rights reserved.

Table 6: Operating Voltage – EDSFF (Continued)

Power Rail	Electrical Parameter	Value
3.3 V_{AUX}	Operating voltage	3.3 Vdc (±5%)
	MIN/MAX rise time	1ms/50ms
	MIN/MAX fall time	1ms/5s
	MAX average current	20mA

Table 7: Operating Voltage – M.2

Power Rail	Electrical Parameter	Value
3.3V	Operating voltage	3.3 Vdc (±5%)
	MIN/MAX rise time	1ms/50ms
	MIN/MAX fall time	1ms/5s
	MIN power-off time	1s
	Inrush current (typical peak)	2.5A
	MAX average current (RMS)	2.4A

Micron Technology, Inc. reserves the right to change products or specifications without notice.
©2023 Micron Technology, Inc.. All rights reserved.

Physical Configuration

M.2 Type 2280 and 22110

M.2 Type 2280 product mass: less than 11 grams

M.2 Type 22110 product mass: less than 14 grams

Figure 2: M.2 Type 2280 Nominal Dimensions

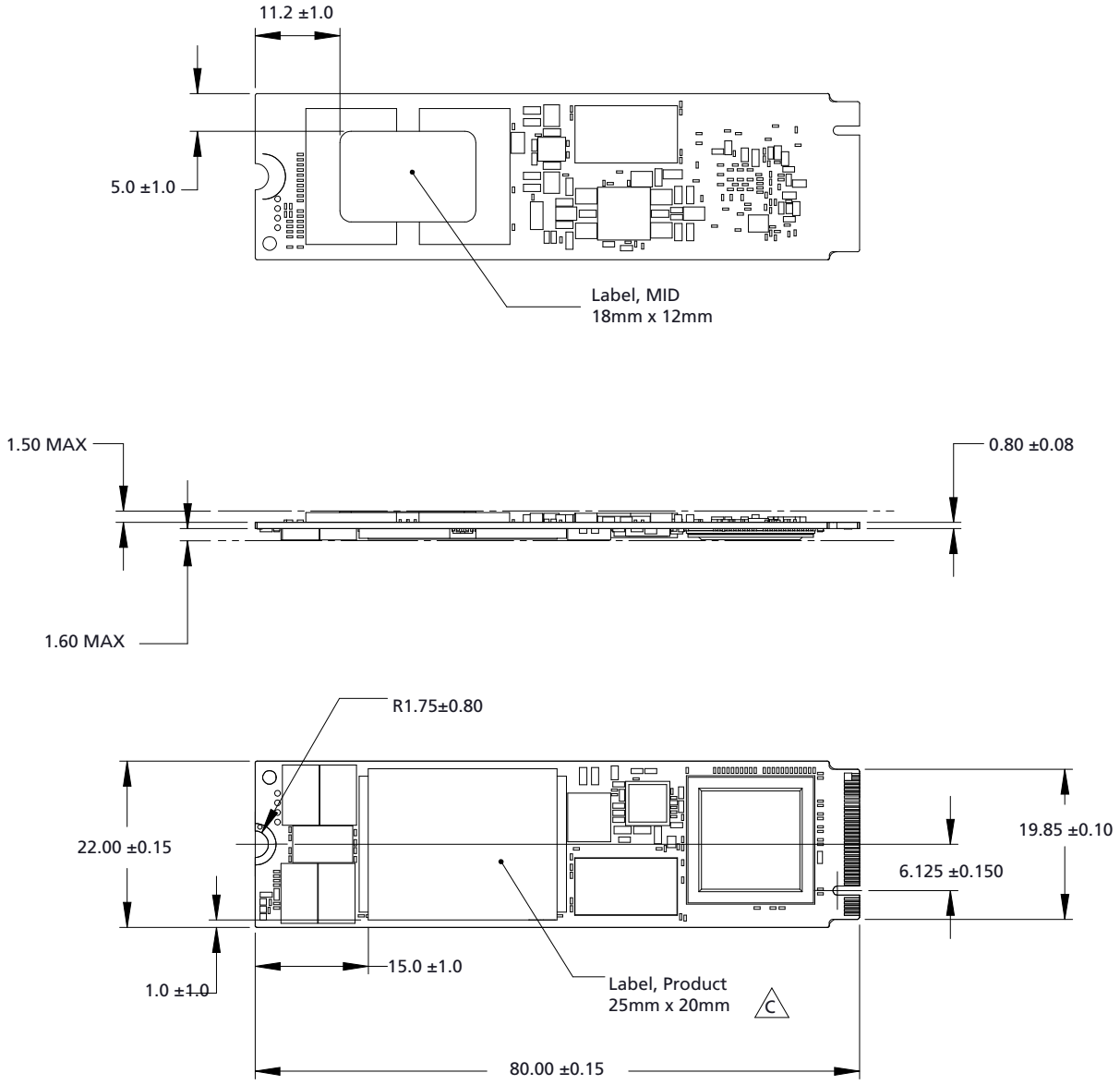

Note: 1. All dimensions are in millimeters.

Micron Technology, Inc. reserves the right to change products or specifications without notice.
©2023 Micron Technology, Inc.. All rights reserved.

Figure 3: M.2 Type 22110 Nominal Dimensions

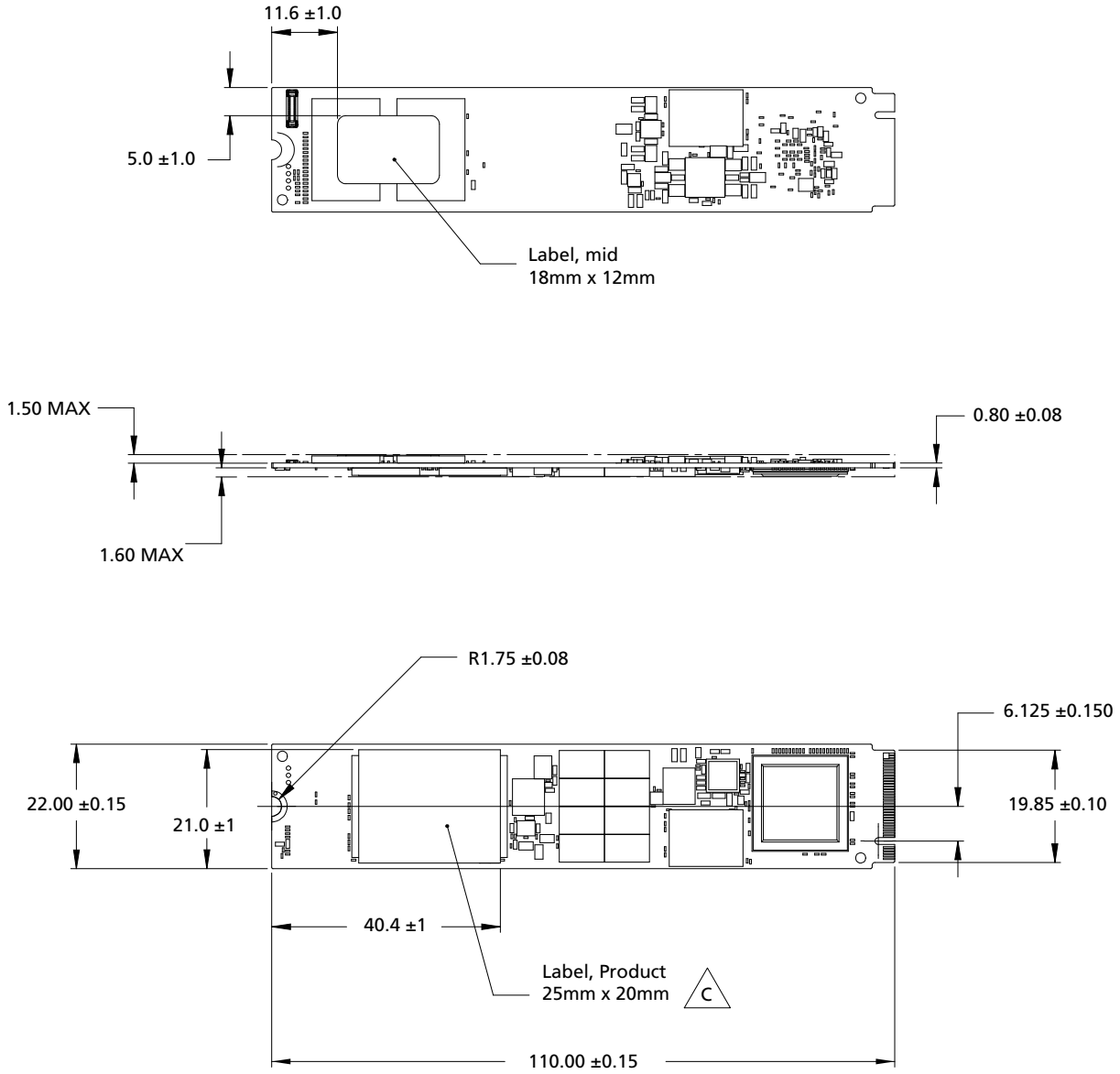

Note: 1. All dimensions are in millimeters.

Table 8: M.2 Type 2280 and 22110 Maximum Dimensions

Form Factor	Width	Length	Height	Unit
M.2 2280	22.00	80.00	3.9	mm
M.2 22110	22.00	110.00	3.9	mm

Table 9: M.2 Type 2280 and 22110 Minimum Gold Finger Dimensions

Form Factor	Height	Unit
M.2 2280	0.76	µm
M.2 22110	0.76	µm

Micron Technology, Inc. reserves the right to change products or specifications without notice.
©2023 Micron Technology, Inc.. All rights reserved.

E1.S Enterprise PCIe x4

Product mass: less than 110g/85g/30 grams for E1.S 25mm/15mm/5.9mm.

Figure 4: E1.S 25mm Nominal Dimensions

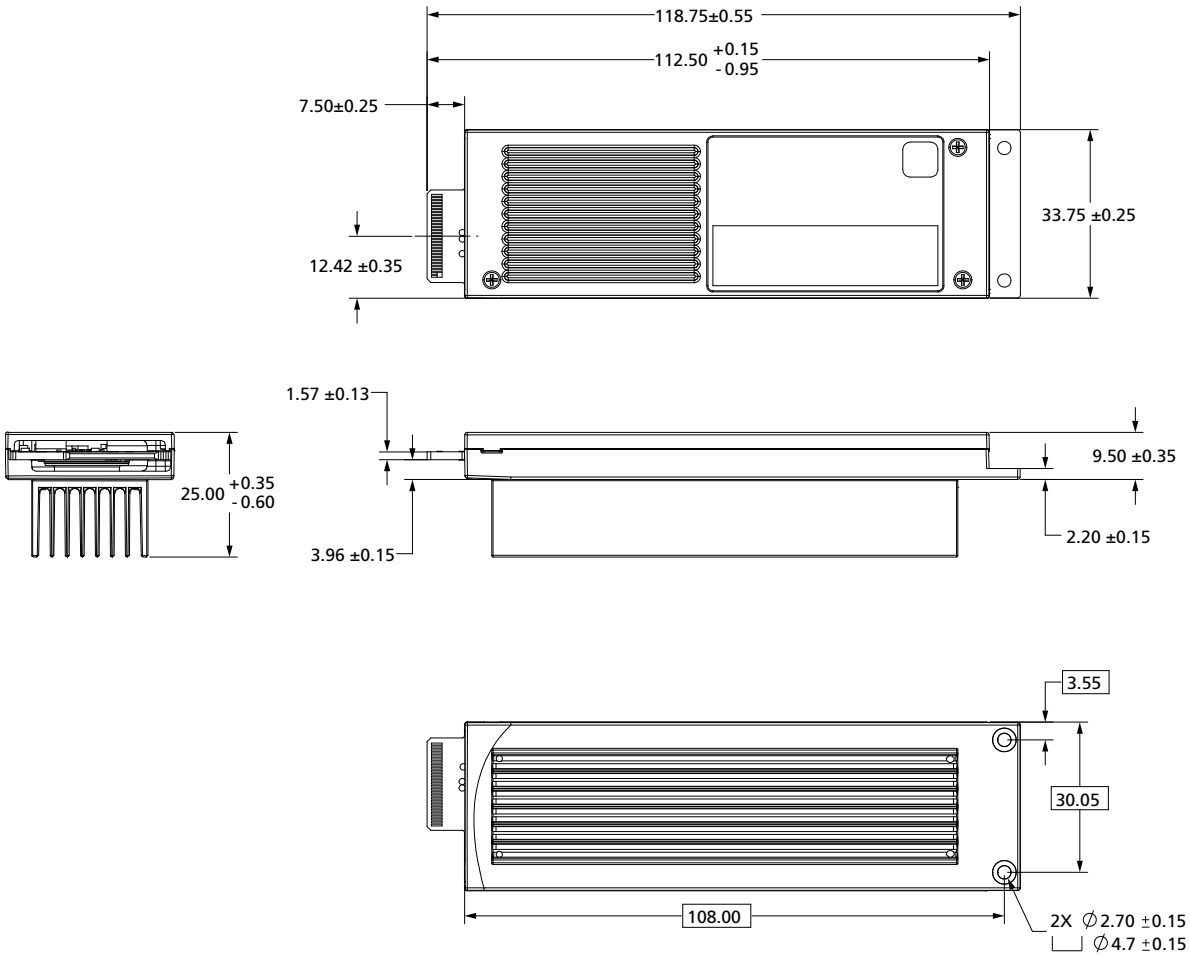

Note: 1. All dimensions are in millimeters.

Micron Technology, Inc. reserves the right to change products or specifications without notice.
©2023 Micron Technology, Inc.. All rights reserved.

Figure 5: E1.S 15mm Nominal Dimensions

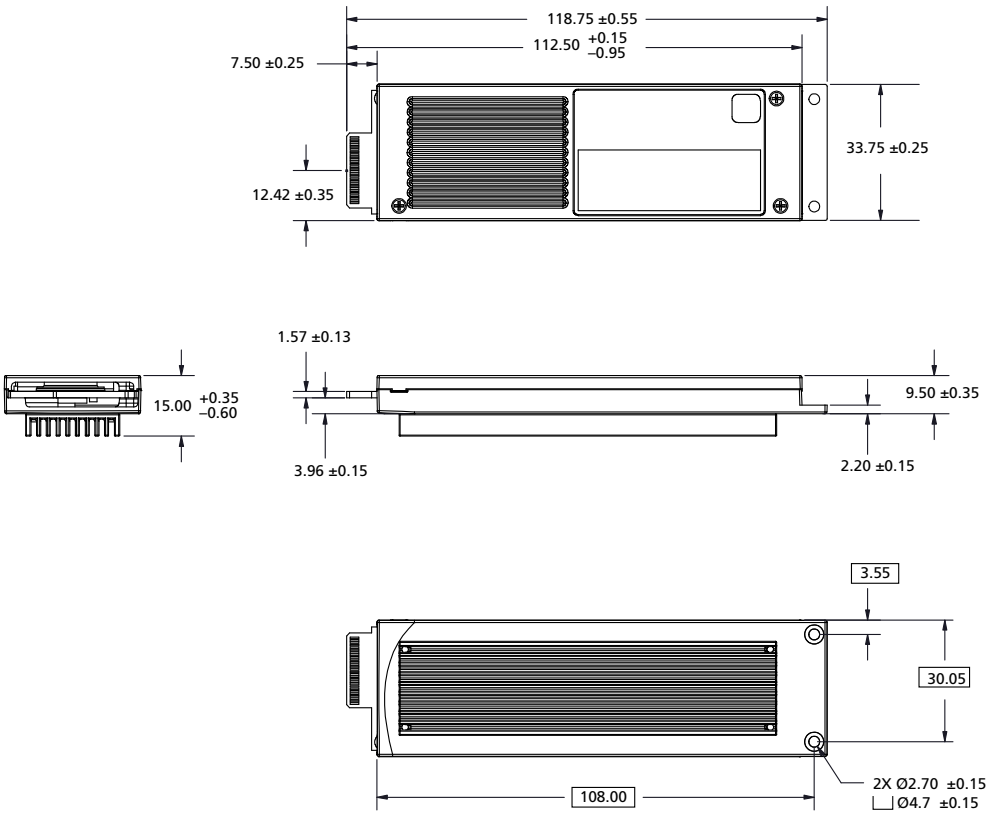

Note: 1. All dimensions are in millimeters.

Micron Technology, Inc. reserves the right to change products or specifications without notice.
©2023 Micron Technology, Inc.. All rights reserved.

Figure 6: E1.S 5.9mm Nominal Dimensions

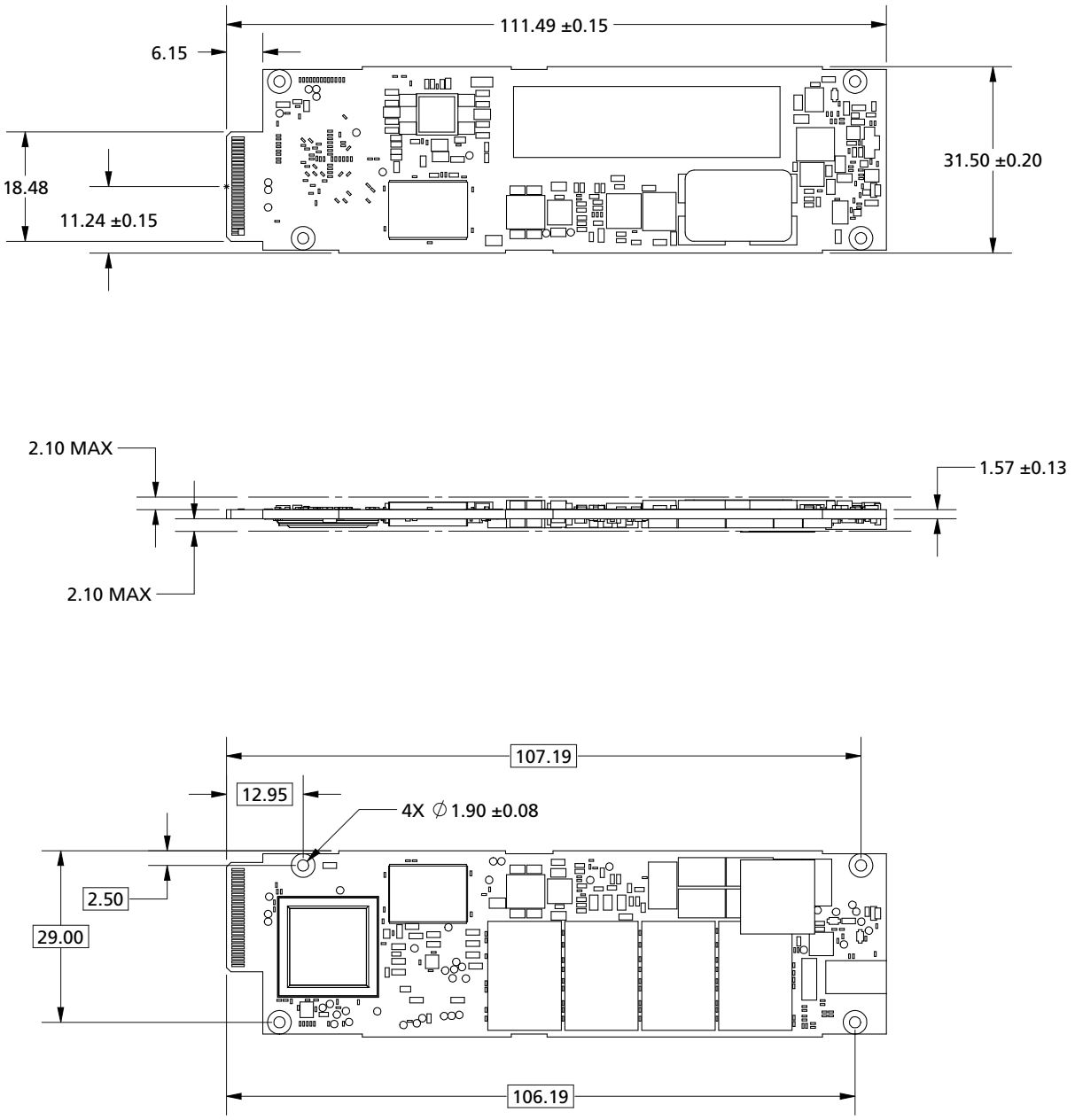

Note: 1. All dimensions are in millimeters.

Table 10: E1.S Enterprise PCIe x4 Maximum Dimensions

Form Factor	Width	Length	Height	Unit
E1.S	33.75	118.75	15/25	mm
E1.S	31.50	111.50	5.90	mm

Note: 1. Dimension values per SFF-TA-1006 Revision 1.4.

Micron Technology, Inc. reserves the right to change products or specifications without notice.
©2023 Micron Technology, Inc.. All rights reserved.

Compliance

Micron SSDs comply with the following:

- Micron Green Standard
- Built with sulfur-resistant resistors
- CE (Europe): EN55032, EN55035 Class B, RoHS
- FCC: CFR Title 47, Part 15, Class B
- UL/cUL: approval to UL 62368-1, IEC 62368-1
- BSMI (Taiwan): approval to CNS 13438, Class B, CNS 15663
- RCM (Australia, New Zealand): AS/NZS CISPR32 Class B
- KC RRL (Korea): approval to KS C 9835, KS C 9832
  B 급 기기 (가정용 정보통신기기) 이 기기는 가정용으로 전자파적합등록을한 기기로서 주거 지역에서는 물론 모든지역에서 사용할 수 있습니다.
- W.E.E.E.: Compliance with EU WEEE directive 2012/19/EC. Additional obligations may apply to customers who place these products in the markets where WEEE is enforced.
- TUV (Germany): approval to EN 62368-1
- V_{CCI} (Japan): CRISPR 32 Class B
  この装置は、クラス B 情報技術装置です。この装置は、家庭環境で使用することを目的としていますが、この装置がラジオやテレビジョン受信機に近接して使用されると、受信障害を引き起こすことがあります。
  取扱説明書に従って正しい取り扱いをして下さい。
  VCCI－B
- IC (Canada): ICES-003 Class B
  - This Class B digital apparatus complies with Canadian ICES-003.
  - Cet appareil numérique de la classe B est conforme à la norme NMB-003 du Canada.
- Morocco: EN55032, EN55035 Class B
- UkrSEPRO (Ukraine): EN55032 Class B, EN 62368, RoHS (Resolution 2017 No. 139)
- UKCA (UK): SI 2016/1091 Class B and SI 2012/3032 RoHS

Micron Technology, Inc. reserves the right to change products or specifications without notice.
©2023 Micron Technology, Inc.. All rights reserved.

Revision History

Rev. C – 02/2026

- Removed U.3 form factors.

Rev. B – 03/2024

- Added 128K Sequential Total Bytes Written (TB) column to Endurance section.

Rev. A – 07/2023

- First Production release.

8000 S. Federal Way, P.O. Box 6, Boise, ID 83707-0006
208-368-4000, micron.com/support
Micron and the Micron logo are trademarks of Micron Technology, Inc.
All other trademarks are the property of their respective owners.
This data sheet contains minimum and maximum limits specified over the power supply and temperature range set forth herein. Although considered final, these specifications are subject to change, as further product development and data characterization sometimes occur.

Micron Technology, Inc. reserves the right to change products or specifications without notice.
©2023 Micron Technology, Inc.. All rights reserved.