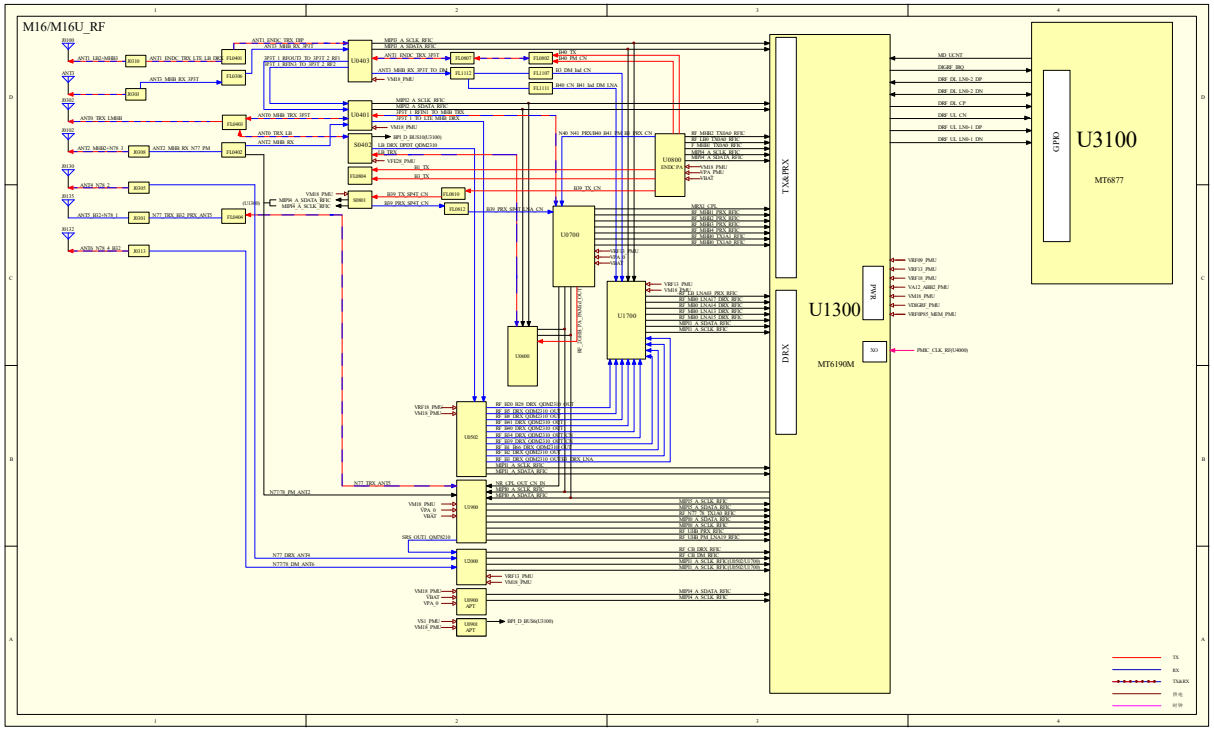
M16/M16U_RF
U3100
MT6877
GPIO
U1300
MT6190M
TX&PRX
DRX
RxMd
U0403
U0401
S0402
S0801
U0700
U1700
U0800
U0502
U0900
U2000
U0900
APT
U0901
APT
U0100
ENDC PA
FL0402
FL0403
FL0404
FL0405
FL0406
FL0407
FL0408
FL0409
FL0410
FL0411
FL0412
FL0413
R0110
R0111
R0112
R0113
R0108
R0109
R0101
R0102
R0103
R0104
R0105
R0106
R0107
R0108
R0109
R0110
R0111
R0112
R0113
R0114
R0115
R0116
R0117
R0118
R0119
R0120
R0121
R0122
R0123
R0124
R0125
R0126
R0127
R0128
R0129
R0130
R0131
R0132
R0133
R0134
R0135
R0136
R0137
R0138
R0139
R0140

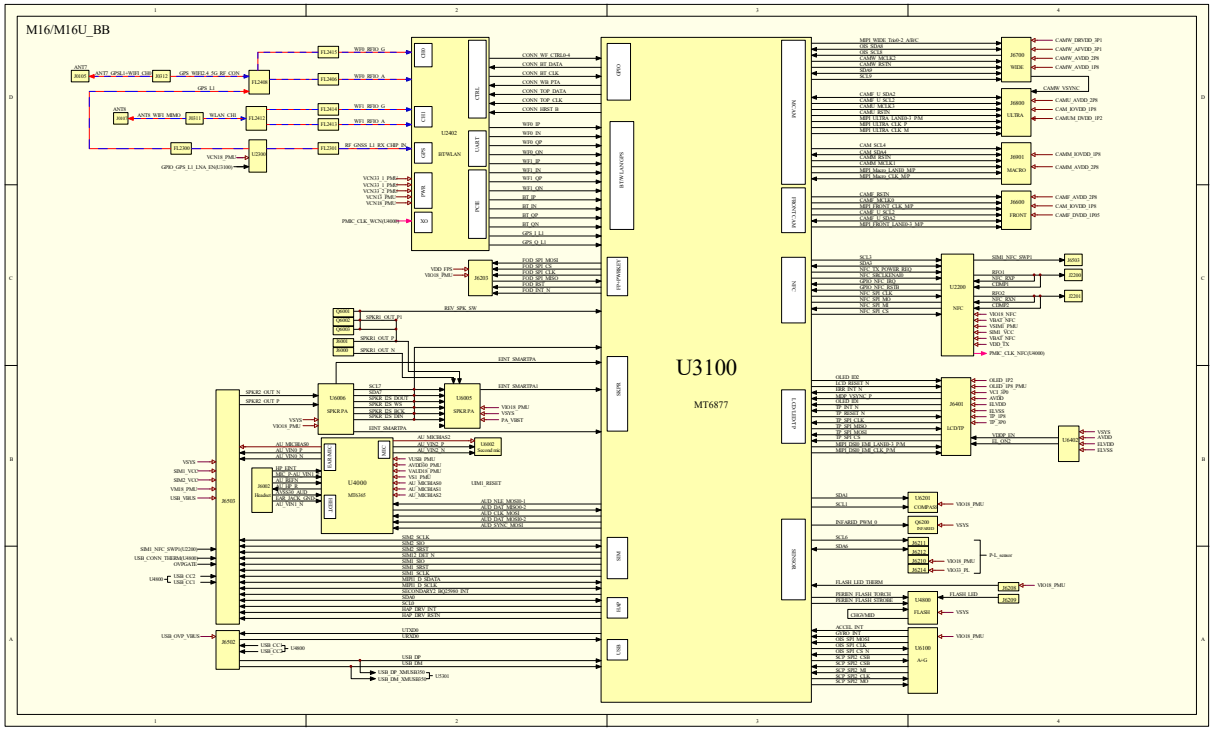
M16/M16U_BB
U3100
MT6877
U2402
RF/WLAN
U3000
MT6365
U6006
SPKR.PA
U6005
SPKR.PA
U6002
Second sub
U2300
NFC
U6400
U6100
A-G
U4000
FLASH
U4000
Header
J6500
J6500
J6500

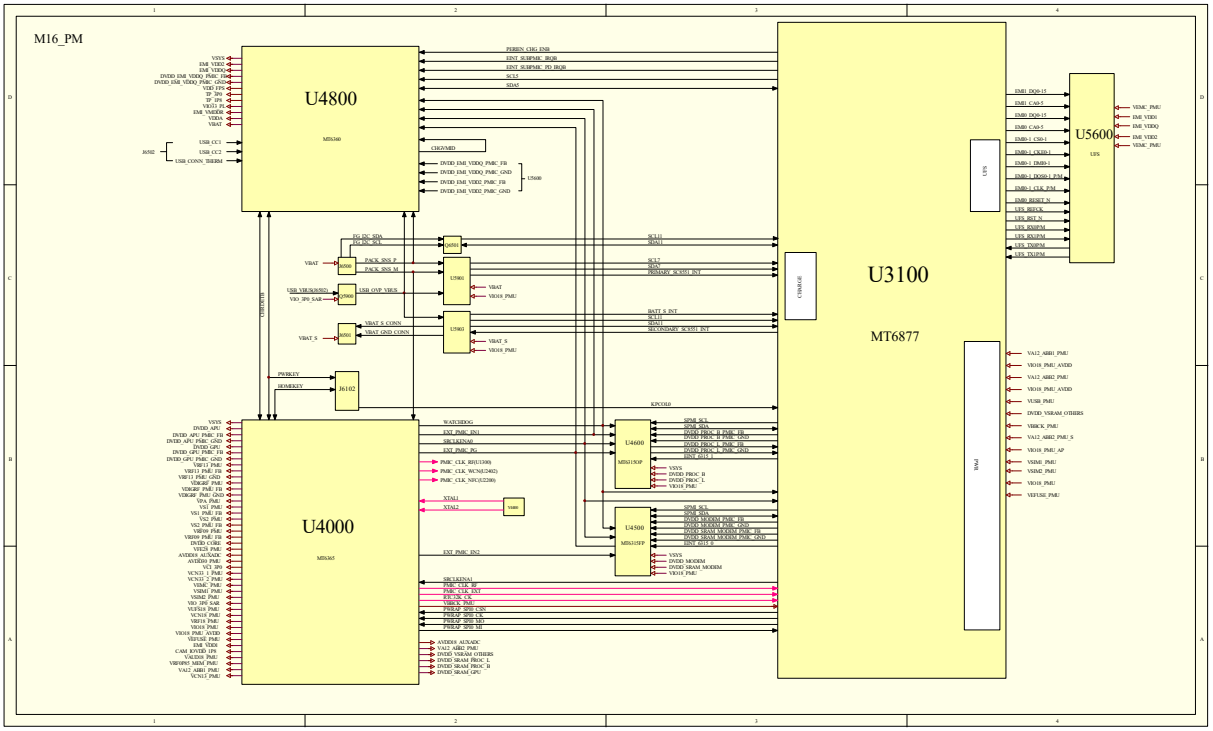
M16_PM
U4800
MT6360
U3100
MT6877
U5600
UFS
U4000
MT6365
U4600
MT6315OP
U4500
MT6315FP
U5001
U5900
U5901
U5903
J6102
CHRAGE
POWI
DIGITAL
PERIEN_CHG_ENB
EINT_SUBPMIC_IRQR
EINT_SUBPMIC_PD_IRQR
SCL5
SDA5
CHGVMID
DVDD_EMI_VDDQ_PMIC_FB
DVDD_EMI_VDDQ_PMIC_GND
DVDD_EMI_VDD2_PMIC_FB
DVDD_EMI_VDD2_PMIC_GND
FG_INT_SDA
FG_INT_SCL
PACK_INS_P
PACK_INS_M
USB_VBUS(6382)
VIO_IPS_SAR
USB_OVP_VBUS
VBAT_S_CONN
VBAT_GND_CONN
VBAT
VIO18_PMU
VBAT_S
PWRKEY
HOMEKEY
KPCOL0
SCL11
SDA11
SCL7
SDA7
PRIMARY_SC5351_INT
BATT_S_INT
SCL11
SDA11
SECONDARY_SC5351_INT
WATCHDOG
EXT_PMIC_IN1
SRCLKENA0
EXT_PMIC_PG
PMIC_CLK_RTC(13306)
PMIC_CLK_WCN(32402)
PMIC_CLK_NFC(32200)
XTAL1
XTAL2
SPMI_SCL
SPMI_SDA
DVDD_PROC_B_PMIC_FB
DVDD_PROC_B_PMIC_GND
DVDD_PROC_L_PMIC_FB
DVDD_PROC_L_PMIC_GND
INT_5315_0
VSYS
DVDD_PROC_B
DVDD_PROC_L
VIO18_PMIC
DVDD_MODEM_PMIC_FB
DVDD_MODEM_PMIC_GND
DVDD_SRAM_MODEM_PMIC_FB
DVDD_SRAM_MODEM_PMIC_GND
INT_5315_8
DVDD_MODEM
DVDD_SRAM_MODEM
EXT_PMIC_IN2
SRCLKENA1
PMIC_CLK_BT
PMIC_CLK_EXT
VRTC_PMIC
VBRCK_PMIC
PMIC_SPMI_CSN
PMIC_SPMI_CLK
PMIC_SPMI_MO
PMIC_SPMI_MI
AVDD18_AUXADC
VA12_ABB2_PMIC
DVDD_SRAM_PMIC_OTHERS
DVDD_SRAM_PROC_L
DVDD_SRAM_PROC_B
DVDD_SRAM_GPU
EMI_DQ0-15
EMI_CA0-5
EMB0_DQ0-15
EMB0_CA0-5
EMB0-1_CS0-1
EMB0-1_CKE0-1
EMB0-1_DMB0-1
EMB0-1_DQSB0-1_P/M
EMB0-1_CLK_P/M
EMB0_RESET_N
UFS_REFCLK
UFS_RST_N
UFS_RXIP/M
UFS_TXIP/M
VEMC_PMU
EMI_VDD1
EMI_VDDQ
EMI_VDD2
VEMC_PMU
VA12_ABB1_PMU
VIO18_PMU_AVDD
VA12_ABB2_PMU
VIO18_PMU_AVDD
VUSB_PMU
DVDD_VSRAM_OTHERS
VBRCK_PMU
VA12_ABB2_PMU_S
VIO18_PMU_AP
VSIM1_PMU
VSIM2_PMU
VIO18_PMU
VEFUSE_PMU
VSYS
EMI_VDD1
EMI_VDDQ
DVDD_EMI_VDDQ_PMIC_FB
DVDD_EMI_VDDQ_PMIC_GND
VDD_FP5
VDD_FP6
SP_IPS
VRF13_PL
EMI_VMEDI
VDDA
VBAT
USB_CC1
USB_CC2
USB_CONN_THERM
JSNE
DVDD_APU
DVDD_APU_PMIC_FB
DVDD_APU_PMIC_GND
DVDD_GPU
DVDD_GPU_PMIC_FB
DVDD_GPU_PMIC_GND
VRF18_PMIC
VRF11_PMIC_FB
VRF11_PMIC_GND
VDIG18_PMIC
VDIG18_PMIC_FB
VDIG18_PMIC_GND
VPA_PMIC
VS1_PMIC
VS1_PMIC_FB
VS2_PMIC
VS2_PMIC_FB
VRFIO_PMIC
VRFIO_PMIC_FB
DVDD_CORE
VM_AUXADC
AVDD18_PMIC
VC1_IPS
VCN33_1_PMIC
VCN33_2_PMIC
VEMC_PMIC
VSIM1_PMIC
VSIM2_PMIC
VIO_IPS_SAR
VUFS18_PMIC
VCN18_PMIC
VRF18_PMIC
VIO18_PMIC
VIO18_PMIC_AVDD
VIO18_PMIC_AP
EMI_VDD1
CAM_IOVDD_1PS
VAUD18_PMIC
VRFIPFE5_MEM_PMIC
VA12_ABB1_PMIC
VCN13_PMIC

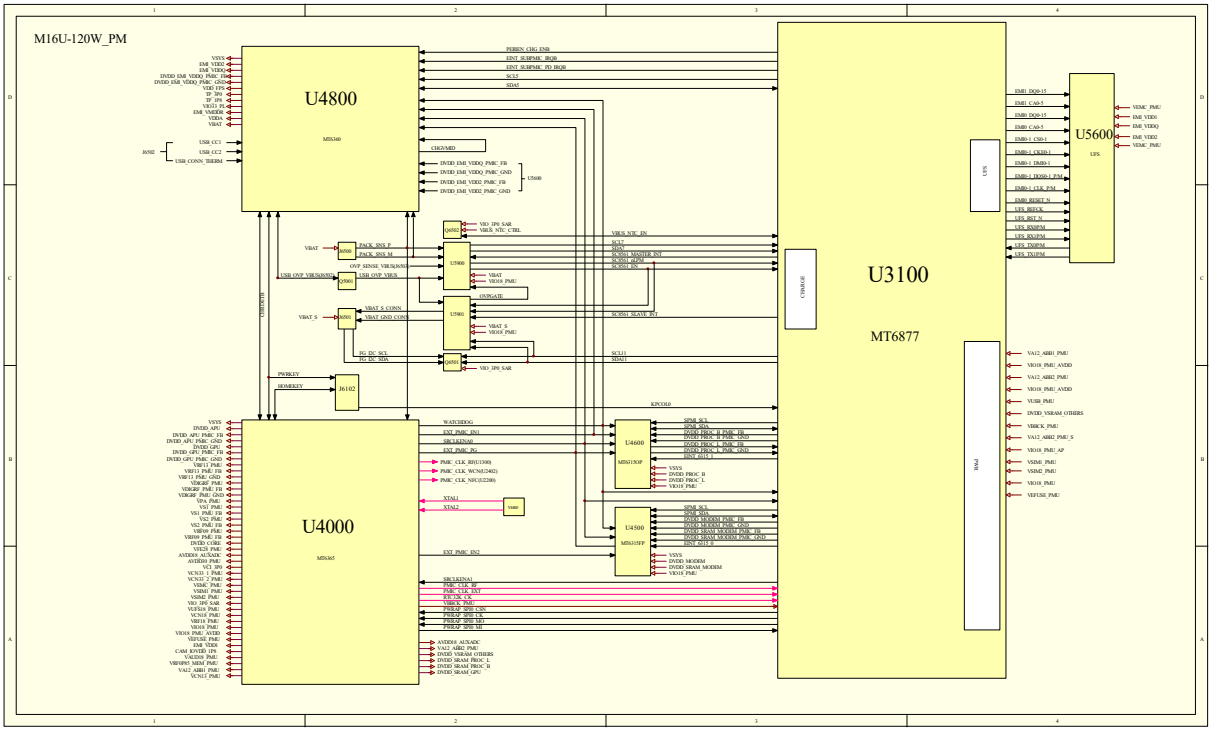
M16U-120W_PM
U4800
MT6360
U4000
MT6365
U3100
MT6877
U5600
UFS
U7000
U7001
U7002
U7003
U4600
MT6315OP
U4500
MT6315FP
CHARGE
PMIC
PERIEN_CHG_ENB
EINT_SUBPMIC_IRQR
EINT_SUBPMIC_PD_IRQR
SCL5
SDA5
CHGVMID
DVDD_EMI_VDDQ_PMIC_FB
DVDD_EMI_VDDQ_PMIC_GND
DVDD_EMI_VDD2_PMIC_FB
DVDD_EMI_VDD2_PMIC_GND
VIO_2P0_SAR
VBUS_NTC_CTRL
VBUS_NTC_IN
SCL7
SDA7
SCSS1_MASTER_INT
SCSS1_MOSI
SCSS1_SS
VBAT
VIO18_PMU
GNPGATE
SCSS1_SLAVE_INT
VBAT_S
SCL11
SDA11
PWRKEY
HOMEKEY
KPCOLD
WATCHDOG
EXT_PMIC_IN1
SRCLKENA0
EXT_PMIC_PG
PMIC_CLK_RTC(U3300)
PMIC_CLK_WCN(U2402)
PMIC_CLK_NFC(U2200)
XTAL1
XTAL2
EXT_PMIC_IN2
SRCLKENA1
PMIC_CLK_BT
PMIC_CLK_EXT
VBUS_PMU
VBRCK_PMU
PMIC_CLK_GPS
PMIC_CLK_MD
PMIC_CLK_MD2
PMIC_CLK_MD3
AVDDS18_AUXADC
VA12_ABB1_PMU
DVDD_SRAM_OTHERS
DVDD_SRAM_PROC_L
DVDD_SRAM_PROC_B
DVDD_SRAM_GPU
EMI_DQ0-15
EMI_CA0-5
EMB0-DQ0-15
EMB0-CA0-5
EMB0-1_CS0-1
EMB0-1_CKE0-1
EMB0-1_DMB0-1
EMB0-1_DQSB0-1_P/M
EMB0-1_CLK_P/M
EMB0_RESET_N
UFS_REFCLK
UFS_RST_N
UFS_RXSP/M
UFS_TXSP/M
VEMC_PMU
EMI_VDD1
EMI_VDDQ
EMI_VDD2
VA12_ABB1_PMU
VIO18_PMU_AVDD
VA12_ABB2_PMU
VIO18_PMU_AVDD
VUSB_PMU
DVDD_VSRAM_OTHERS
VBRCK_PMU
VA12_ABB2_PMU_S
VIO18_PMU_AP
VSIM1_PMU
VSIM2_PMU
VIO18_PMU
VEFUSE_PMU

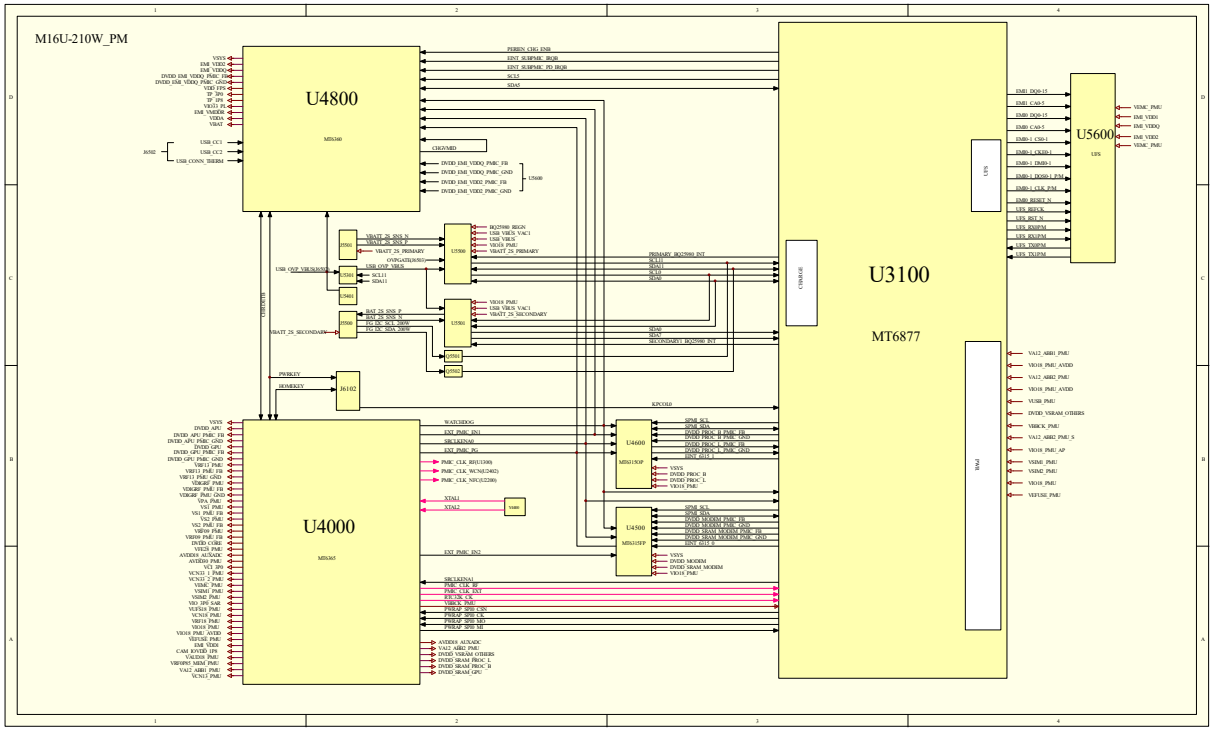
M16U-210W_PM
U4800
MT6360
U3100
MT6877
U5600
UFS
U4000
MT6365
U4600
MT6315OP
U4500
MT6315FP
J6102
PWRKEY
HOMEKEY
KPCOL0
CHGVMID
PERIEN_CHG_ENB
EINT_SUBPMIC_IRQR
EINT_SUBPMIC_PD_IRQR
SCL5
SDA5
WATCHDOG
EXT_PMIC_IN1
SRCLKENA0
EXT_PMIC_IN2
XTAL1
XTAL2
VSYS
DVDD_APU
DVDD_GPU
DVDD_MODEM
DVDD_SRAM_OTHERS
DVDD_SRAM_PROC_B
DVDD_SRAM_GPU
DVDD_SRAM_MODEM
VBRICK_PMU
VA12_ABB1_PMU_S
VIO18_PMU_AP
VSIM1_PMU
VSIM2_PMU
VIO18_PMU
VEFUSE_PMU
VDMC_PMU
EMI_VIDO
EMI_VIDIQ
EMI_VIDI2
EMI_DQ0-15
EMI_CA0-5
EMI_CS0-1
EMI_CKE0-1
EMI_DM0-1
EMI_DQS0-1_P/M
EMI_CLK_P/M
EMI_RESET_N
UFS_REFCLK
UFS_RST_N
UFS_RXSP/M
UFS_RXSN/M
UFS_TXSP/M
UFS_TXSN/M
USB_CC1
USB_CC2
USB_CONN_THERM
JS502
JS501
JS503
JS504
JS505
JS506
U5501
U5502
U5503
U5504
U5505
U5506
U5507
U5508
U5509
U5510
U5600
VBATT_2S_SNS_N
VBATT_2S_SNS_P
VBATT_2S_PRIMARY
OVPGATE(0.9/0.5)
USB_OVP_VBUS(0.9/0.5)
SCL11
SDA11
BQ25980_IRQN
USB_VBUS_VAC1
USB_VBUS
VIO18_PMU
VBATT_2S_SECONDARY
BAT_2S_SNS_P
BAT_2S_SNS_N
FG_ISC_SCL_2S9W
FG_ISC_SDA_2S9W
VBATT_2S_SECONDARY
PRIMARY_BQ25980_INT
SCL12
SDA12
SCL10
SDA10
SECONDARY1_BQ25980_INT
SPMI_SCL
SPMI_SDA
DVDD_PROC_B_PMIC_FB
DVDD_PROC_B_PMIC_GND
DVDD_PROC_L_PMIC_FB
DVDD_PROC_L_PMIC_GND
DVDD_SRAM_MODEM_PMIC_FB
DVDD_SRAM_MODEM_PMIC_GND
DVDD_PROC_B
DVDD_PROC_L
DVDD_MODEM
DVDD_SRAM_MODEM
VIO18_PMIC
SRCLKENA0
PMIC_CLK_BT
PMIC_CLK_EXT
VBRICK_PMU
VBRICK_PMIC
PMIC_CLK_BT(13MHz)
PMIC_CLK_WCN(32.2402)
PMIC_CLK_NFC(32.2268)
PMIC_CLK_EXT
PMIC_CLK_CPU
PMIC_CLK_MD
PMIC_CLK_MD2
PMIC_CLK_MD3
PMIC_CLK_MD4
PMIC_CLK_CPU
PMIC_CLK_GPU
PMIC_CLK_MM
PMIC_CLK_MM2
PMIC_CLK_MM3
PMIC_CLK_MM4
PMIC_CLK_MM5
PMIC_CLK_MM6
PMIC_CLK_MM7
PMIC_CLK_MM8
PMIC_CLK_MM9
PMIC_CLK_MM10
PMIC_CLK_MM11
PMIC_CLK_MM12
PMIC_CLK_MM13
PMIC_CLK_MM14
PMIC_CLK_MM15
PMIC_CLK_MM16
PMIC_CLK_MM17
PMIC_CLK_MM18
PMIC_CLK_MM19
PMIC_CLK_MM20
PMIC_CLK_MM21
PMIC_CLK_MM22
PMIC_CLK_MM23
PMIC_CLK_MM24
PMIC_CLK_MM25
PMIC_CLK_MM26
PMIC_CLK_MM27
PMIC_CLK_MM28
PMIC_CLK_MM29
PMIC_CLK_MM30
PMIC_CLK_MM31
PMIC_CLK_MM32
PMIC_CLK_MM33
PMIC_CLK_MM34
PMIC_CLK_MM35
PMIC_CLK_MM36
PMIC_CLK_MM37
PMIC_CLK_MM38
PMIC_CLK_MM39
PMIC_CLK_MM40
PMIC_CLK_MM41