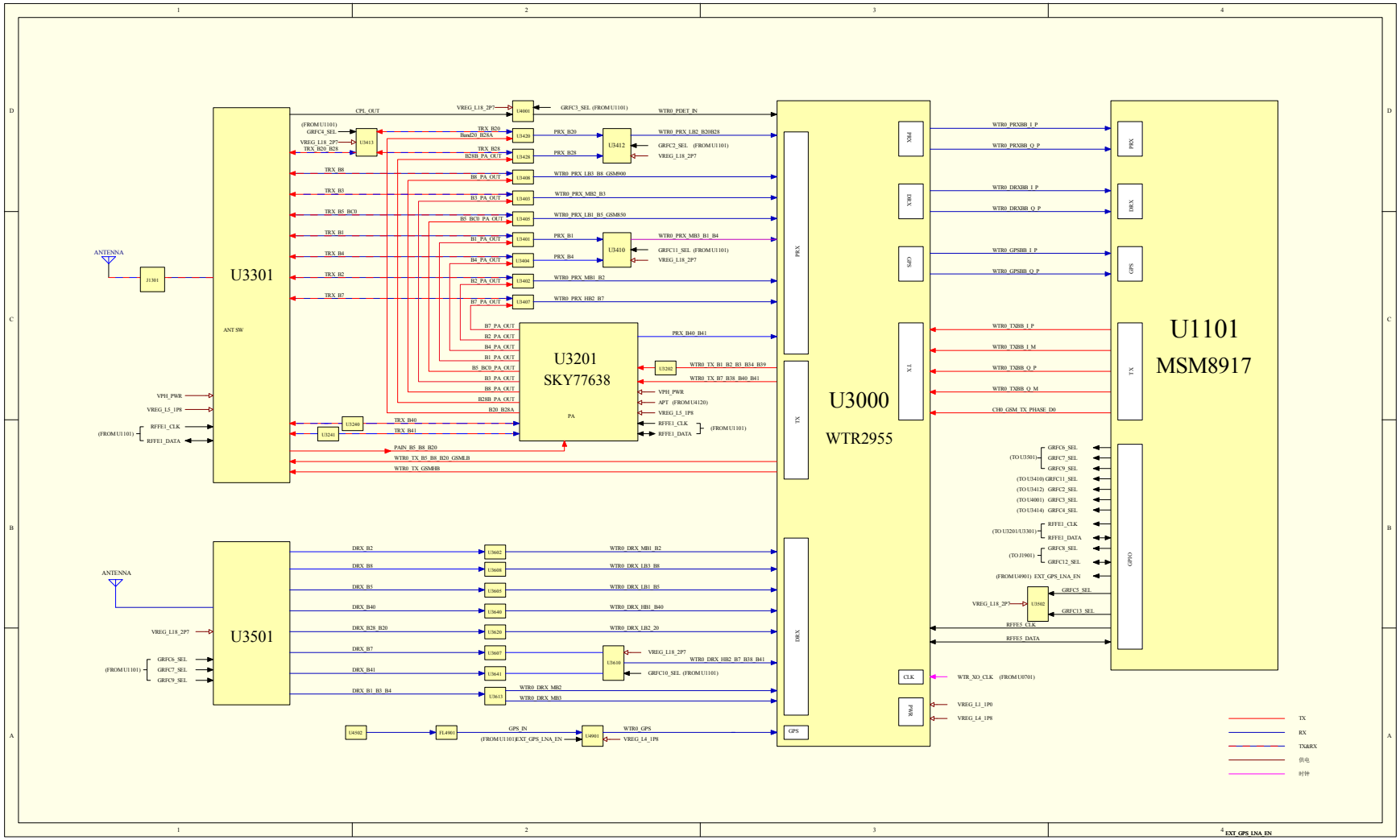
U3301
ANT SW
U3201
SKY77638
PA
U3000
WTR2955
U1101
MSM8917
U3501
ANTENNA
J1301
PRX
DRX
TX
GPS
XO&4
TCXO
SBI
XO&8
CLK
GPIO
CPL_OUT
VREG_L18_2P7
GRFC3_SEL (FROM U1101)
WTR0_PDET_IN
(FROM U1101)
GRFC4_SEL
TRX_B20
TRX_B28
PRX_B20
PRX_B28
WTR0_PRX_LB2_B20B28
GRFC2_SEL (FROM U1101)
TRX_B8
TRX_B3
TRX_B5_BC0
TRX_B1
TRX_B4
TRX_B2
TRX_B7
WTR0_PRX_LB3_B8_GSM900
WTR0_PRX_MB2_B3
WTR0_PRX_LB1_B5_GSM850
WTR0_PRX_MB3_B1_B4
GRFC11_SEL (FROM U1101)
WTR0_PRX_MB1_B2
WTR0_PRX_HB2_B7
PRX_B40_B41
WTR0_TX_B1_B2_B3_B34_B39
WTR0_TX_B7_B38_B40_B41
VPH_PWR
APT (FROM U4120)
VREG_L5_1P8
RFFE1_CLK
RFFE1_DATA
(FROM U1101)
TRX_B40
TRX_B41
PAIN_B5_B8_B20
WTR0_TX_B5_B8_B20_GSMLB
WTR0_TX_GSMHB
WTR0_PRXBB_I_P
WTR0_PRXBB_Q_P
WTR0_DRXBB_I_P
WTR0_DRXBB_Q_P
WTR0_GPSBB_I_P
WTR0_GPSBB_Q_P
WTR0_TXBB_I_P
WTR0_TXBB_I_M
WTR0_TXBB_Q_P
WTR0_TXBB_Q_M
CH0_GSM_TX_PHASE_D0
(TO U3501) GRFC6_SEL
GRFC7_SEL
GRFC9_SEL
(TO U3410) GRFC11_SEL
(TO U3412) GRFC2_SEL
(TO U4001) GRFC3_SEL
(TO U3414) GRFC4_SEL
(TO U3201/U3301) RFFE1_CLK
RFFE1_DATA
(TO J1901) GRFC8_SEL
GRFC12_SEL
(FROM U4901) EXT_GPS_LNA_EN
GRFC5_SEL
GRFC13_SEL
RFFE5_CLK
RFFE5_DATA
WTR_XO_CLK (FROM U0701)
VREG_L1_1P0
VREG_L4_1P8
DRX_B2
DRX_B8
DRX_B5
DRX_B40
DRX_B28_B20
DRX_B7
DRX_B41
DRX_B1_B3_B4
WTR0_DRX_MB1_B2
WTR0_DRX_LB3_B8
WTR0_DRX_LB1_B5
WTR0_DRX_HB1_B40
WTR0_DRX_LB2_20
WTR0_DRX_HB2_B7_B38_B41
GRFC10_SEL (FROM U1101)
WTR0_DRX_MB2
WTR0_DRX_MB3
GPS_IN
(FROM U1101)EXT_GPS_LNA_EN
WTR0_GPS
VREG_L4_1P8
TX
RX
TX&RX
供电
时钟
EXT_GPS_LNA_EN

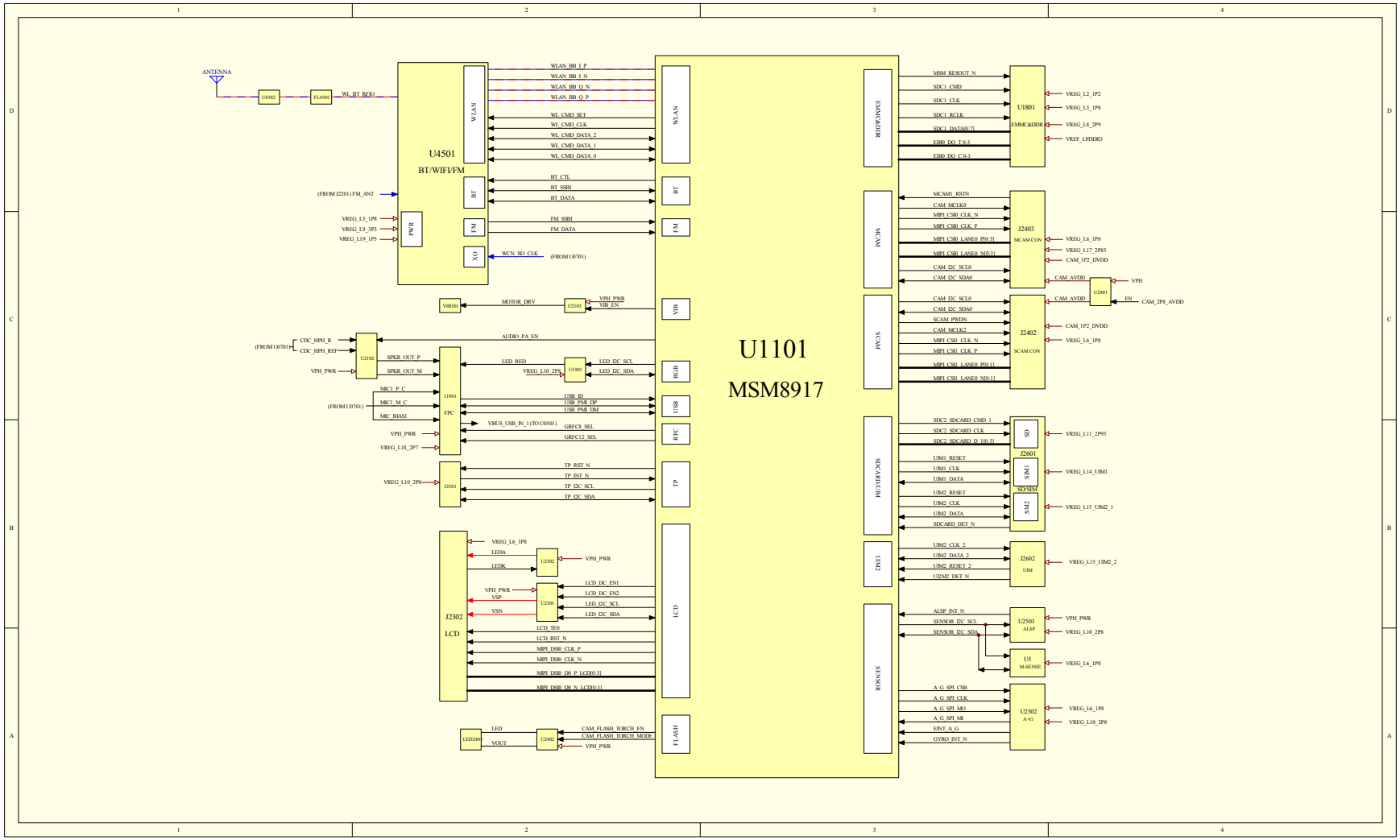
ANTENNA
U4502
FL4501
WL_BT_RFIO
U4501
BT/WIFI/FM
WLAN
BT
FM
XO
PWR
WLAN_BB_I_P
WLAN_BB_I_N
WLAN_BB_Q_N
WLAN_BB_Q_P
WL_CMD_SET
WL_CMD_CLK
WL_CMD_DATA_2
WL_CMD_DATA_1
WL_CMD_DATA_0
BT_CTL
BT_SSBI
BT_DATA
FM_SSBI
FM_DATA
WCN_XO_CLK
(FROM U0701)
(FROM J2201) FM_ANT
VREG_L5_1P8
VREG_L9_3P3
VREG_L19_1P3
VIB301
MOTOR_DRV
U2103
VPH_PWR
VIB_EN
U2102
AUDIO_PA_EN
CDC_HPH_R
CDC_HPH_REF
(FROM U0701)
SPKR_OUT_P
SPKR_OUT_M
VPH_PWR
J1901
FPC
MIC1_P_C
MIC1_M_C
MIC_BIAS1
(FROM U0701)
VPH_PWR
VREG_L18_2P7
LED_RED
U1901
VREG_L10_2P8
LED_I2C_SCL
LED_I2C_SDA
USB_ID
USB_PMI_DP
USB_PMI_DM
VBUS_USB_IN_1 (TO U0501)
GRFC9_SEL
GRFC12_SEL
J2301
VREG_L10_2P8
TP_RST_N
TP_INT_N
TP_I2C_SCL
TP_I2C_SDA
J2302
LCD
VREG_L6_1P8
LEDA
LEDK
U2302
VPH_PWR
VPH_PWR
VSP
VSN
U2301
LCD_DC_EN1
LCD_DC_EN2
LED_I2C_SCL
LED_I2C_SDA
LCD_TE0
LCD_RST_N
MIPI_DSI0_CLK_P
MIPI_DSI0_CLK_N
MIPI_DSI0_D0_P_LCD[0:3]
MIPI_DSI0_D0_N_LCD[0:3]
LED2401
LED
VOUT
U2402
CAM_FLASH_TORCH_EN
CAM_FLASH_TORCH_MODE
VPH_PWR
U1101
MSM8917
WLAN
BT
FM
VIB
RGB
USB
RFC
TP
LCD
FLASH
EMMC/DDR
MCAM
SCAM
SD/CARD/UIM
UIM2
SENSOR
MSM_RESOUT_N
SDC1_CMD
SDC1_CLK
SDC1_RCLK
SDC1_DATA[0:7]
EBI0_DQ_T_0-3
EBI0_DQ_C_0-3
U1801
EMMC&DDR
VREG_L2_1P2
VREG_L5_1P8
VREG_L8_2P9
VREF_LPDDR3
MCAM1_RSTN
CAM_MCLK0
MIPI_CSI0_CLK_N
MIPI_CSI0_CLK_P
MIPI_CSI0_LANE0_P[0:3]
MIPI_CSI0_LANE0_N[0:3]
CAM_I2C_SCL0
CAM_I2C_SDA0
J2403
MCAM CON
VREG_L6_1P8
VREG_L17_2P85
CAM_1P2_DVDD
CAM_AVDD
U2401
VPH
EN
CAM_2P8_AVDD
CAM_I2C_SCL0
CAM_I2C_SDA0
SCAM_PWDN
CAM_MCLK2
MIPI_CSI1_CLK_N
MIPI_CSI1_CLK_P
MIPI_CSI1_LANE0_P[0:1]
MIPI_CSI1_LANE0_N[0:1]
J2402
SCAM CON
CAM_1P2_DVDD
VREG_L6_1P8
SDC2_SDCARD_CMD_1
SDC2_SDCARD_CLK
SDC2_SDCARD_D_1[0:3]
SD
J2601
VREG_L11_2P95
UIM1_RESET
UIM1_CLK
UIM1_DATA
SIM1
SD/SIM
VREG_L14_UIM1
UIM2_RESET
UIM2_CLK
UIM2_DATA
SDCARD_DET_N
SIM2
VREG_L15_UIM2_1
UIM2_CLK_2
UIM2_DATA_2
UIM2_RESET_2
UIM2_DET_N
J2602
UIM
VREG_L15_UIM2_2
ALSP_INT_N
SENSOR_I2C_SCL
SENSOR_I2C_SDA
U2503
ALSP
VPH_PWR
VREG_L10_2P8
U5
M-SENSE
VREG_L6_1P8
A_G_SPI_CSB
A_G_SPI_CLK
A_G_SPI_MO
A_G_SPI_MI
EINT_A_G
GYRO_INT_N
U2502
A+G
VREG_L6_1P8
VREG_L10_2P8

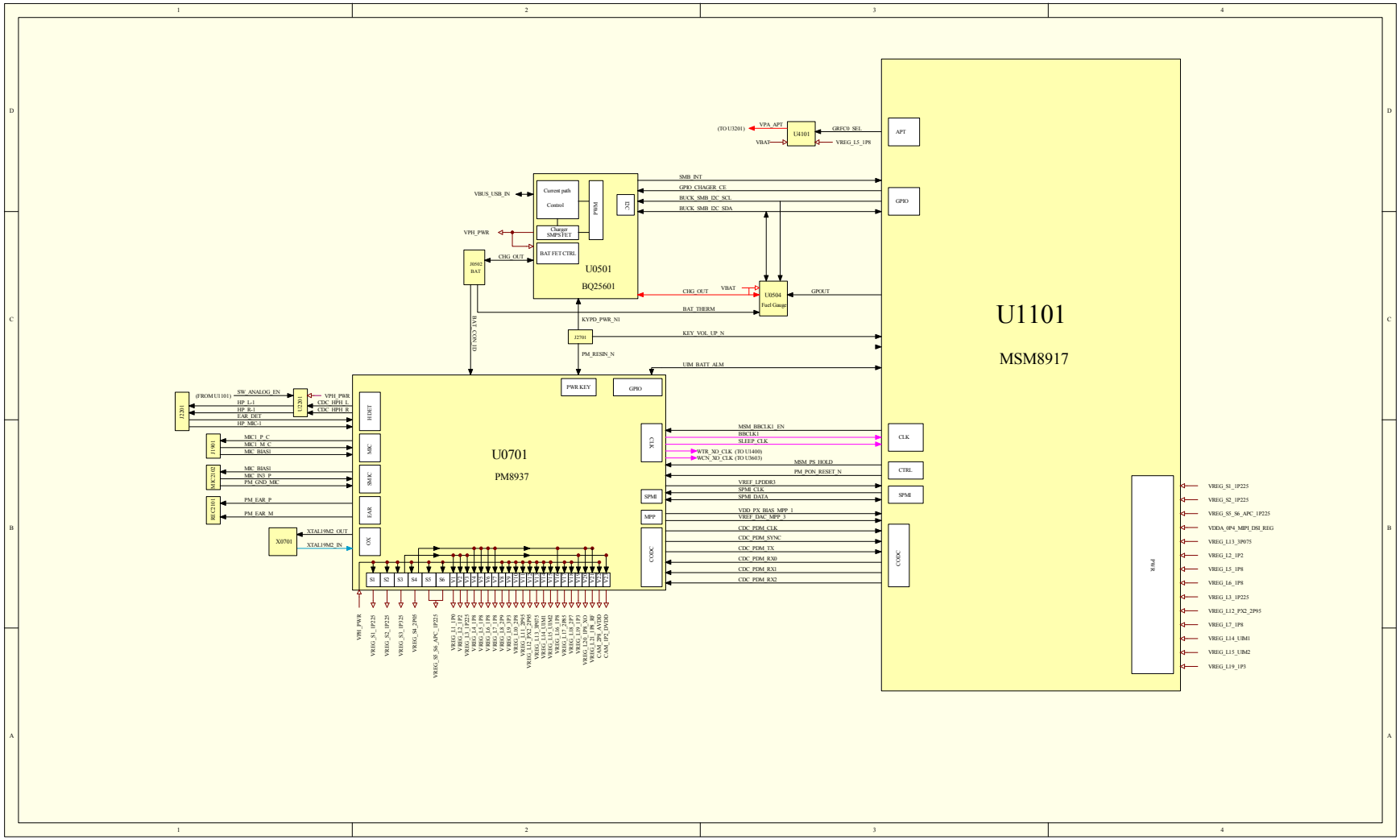
U1101
MSM8917
APT
GPIO
CLK
CTRL
SPMI
CODC
PMIC
U0701
PM8937
HTDET
MIC
SMIC
EAR
OX
PWR KEY
GPIO
CLK
SPMI
MPP
CODC
U0501
BQ25601
Current path Control
PWM
I2C
Charger SMPS FET
BAT FET CTRL
U4101
U0504
Fuel Gauge
J0502 BAT
J2701
J2201
U2201
J1901
MIC2102
HS C2101
X0701
(TO U3201)
VPA_APT
VBAT
GRFC0_SEL
VREG_L5_1P8
VBUS_USB_IN
VPH_PWR
CHG_OUT
SMB_INT
GPIO_CHAGER_CE
BUCK_SMB_I2C_SCL
BUCK_SMB_I2C_SDA
GPOUT
BAT_THERM
KYPD_PWR_N1
KEY_VOL_UP_N
PM_RESIN_N
UIM_BATT_ALM
BAT_CON_ID
(FROM U1101)
SW_ANALOG_EN
HP_L-1
HP_R-1
EAR_DET
HP_MIC-1
CDC_HPH_L
CDC_HPH_R
MIC1_P_C
MIC1_M_C
MIC_BIAS1
MIC_BIAS3
MIC_IN3_P
PM_GND_MIC
PM_EAR_P
PM_EAR_M
XTAL19M2_OUT
XTAL19M2_IN
MSM_BBCLK1_EN
BBCLK1
SLEEP_CLK
WTR_XO_CLK (TO U1400)
WCN_XO_CLK (TO U3603)
MSM_PS_HOLD
PM_PON_RESET_N
VREF_LPDDR3
SPMI_CLK
SPMI_DATA
VDD_PX_BIAS_MPP_1
VREF_DAC_MPP_3
CDC_PDM_CLK
CDC_PDM_SYNC
CDC_PDM_TX
CDC_PDM_RX0
CDC_PDM_RX1
CDC_PDM_RX2
VREG_S1_1P225
VREG_S2_1P225
VREG_S5_S6_APC_1P225
VDDA_0P4_MIPI_DSI_REG
VREG_L13_3P075
VREG_L2_1P2
VREG_L5_1P8
VREG_L6_1P8
VREG_L3_1P225
VREG_L12_PX2_2P95
VREG_L7_1P8
VREG_L14_UIM1
VREG_L15_UIM2
VREG_L19_1P3
VPH_PWR
VREG_S1_1P225
VREG_S2_1P225
VREG_S3_1P125
VREG_S4_2P05
VREG_S5_S6_APC_1P225
VREG_L1_1P0
VREG_L2_1P2
VREG_L3_1P225
VREG_L4_1P8
VREG_L5_1P8
VREG_L6_1P8
VREG_L7_1P8
VREG_L8_2P05
VREG_L9_1P8
VREG_L10_2P95
VREG_L11_2P95
VREG_L12_PX2_2P95
VREG_L13_3P075
VREG_L14_UIM1
VREG_L15_UIM2
VREG_L16_1P8
VREG_L17_2P85
VREG_L18_1P8
VREG_L19_1P3
VREG_L20_PR_XO
VREG_L21_1P8
CAM2_2P8_AVDD
CAM1_PZ_DVDD