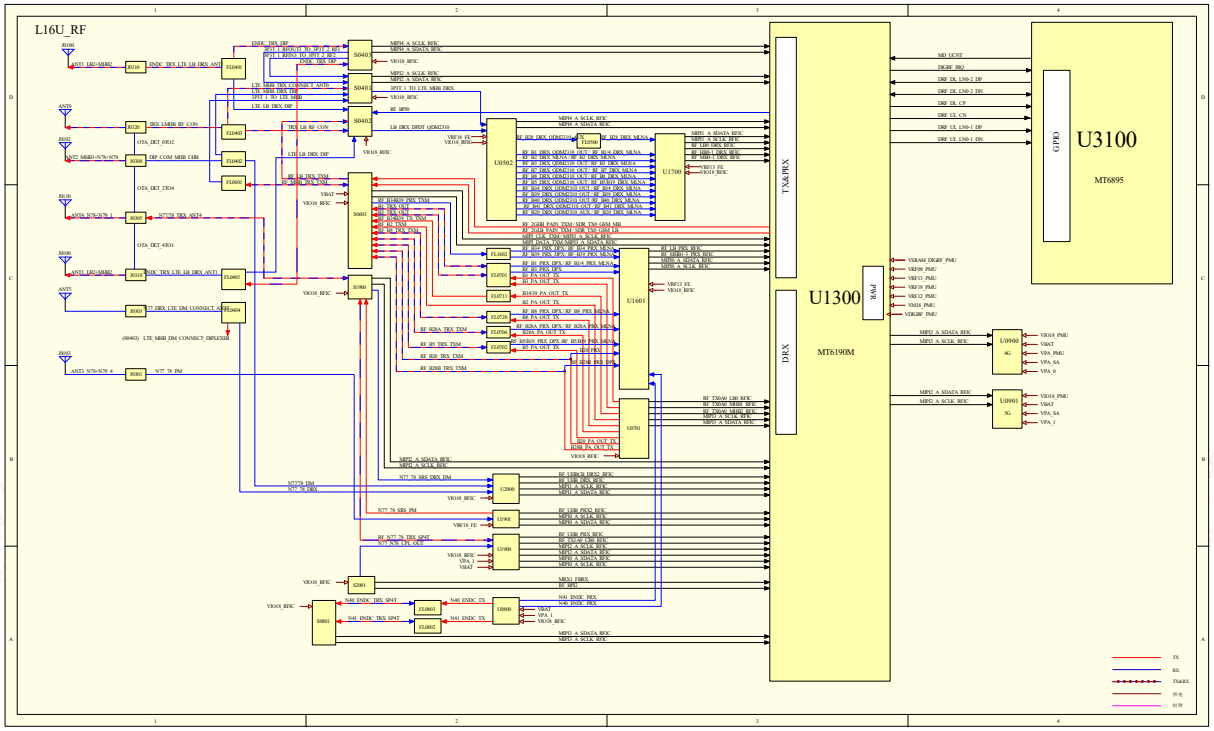
L16U_RF
U3100
MT6895
U1300
MT6190M
U1700
U1601
U0502
U0701
U0900
U0901
U3000
U1001
U1000
U0800
S0401
S0402
S0403
S0900
S2001
S0801
FL0400
FL0402
FL0403
FL0405
FL0406
FL0407
FL0408
FL0409
FL0410
FL0411
FL0412
FL0413
FL0414
FL0415
FL0416
FL0417
FL0418
FL0419
FL0420
FL0421
FL0422
FL0423
FL0424
FL0425
FL0426
FL0427
FL0428
FL0429
FL0430
FL0431
FL0432
FL0433
FL0434
FL0435
FL0436
FL0437
FL0438
FL0439
FL0440
FL0441
FL0442
FL0443
FL0444

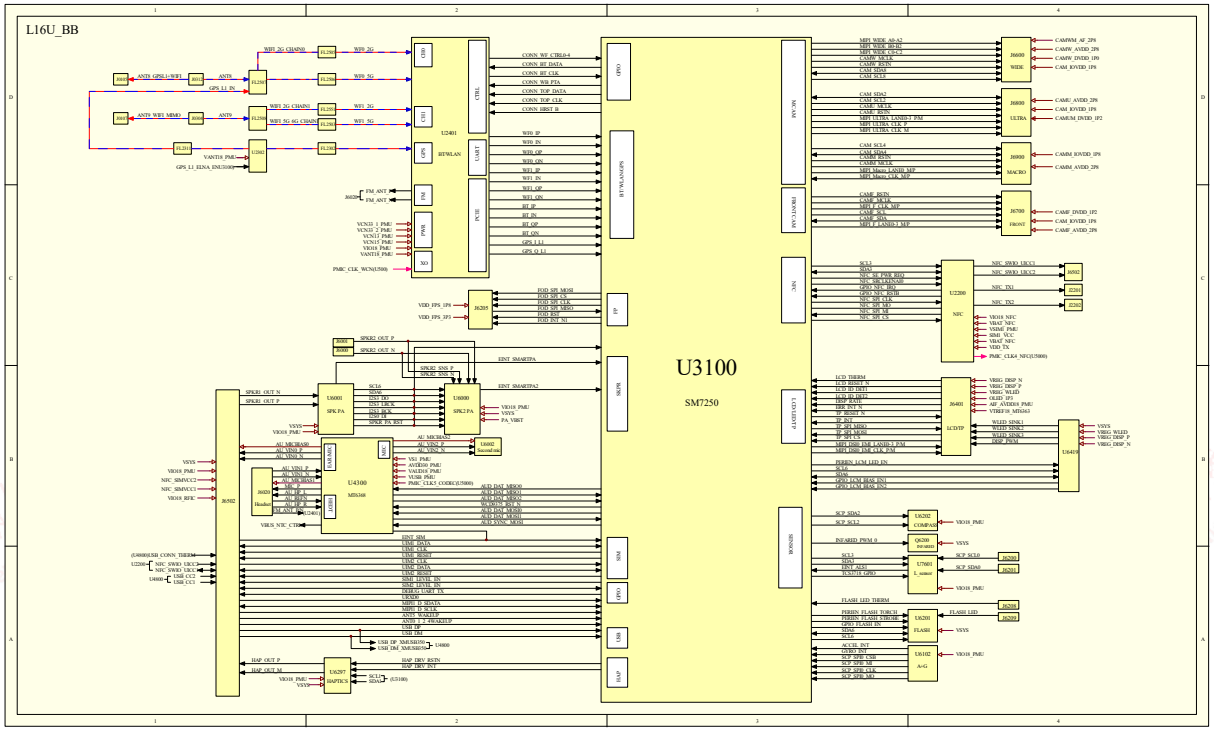
L16U_BB
U3100
SM7250
U2401
RFWLAN
U3000
MS368
U4300
U3000
SPK.PA
U3000
SPK2.PA
U2200
NFC
J6400
LCD/TP
J6600
WIDE
J6800
ULTRA
J8000
MACRO
J6700
FRONT
J6200
J6502
J6502
J6502

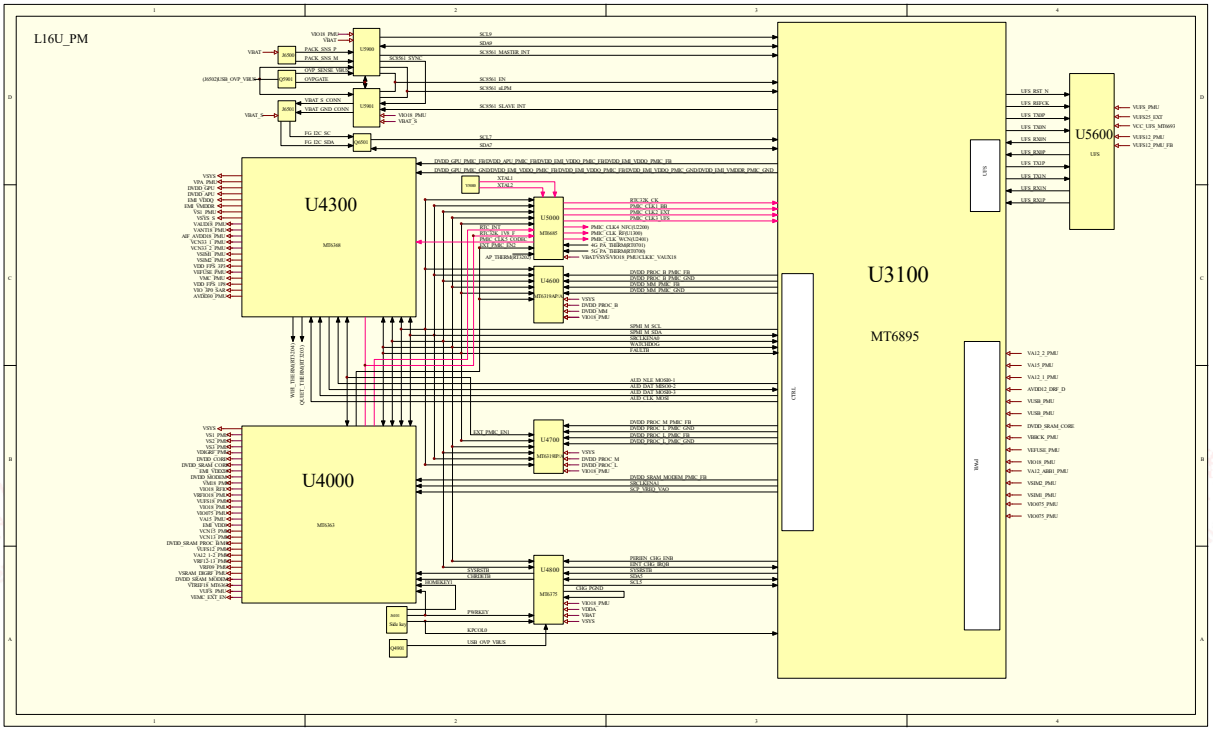
L16U_PM
U3100
MT6895
U4300
MT6368
U4000
MT6363
U5600
UFS
U5900
U5900
U5900
U5900
U5900
U5000
MT6685
U4600
MT6316PD
U4700
MT6319PD
U4800
MT6373
CTRL
PMU
VBAT
VIO18_PMU
PACK_SNS_P
PACK_SNS_M
(16S92)USB_OVP_VBUS
OVP_SENSE_VBUS
OVPGATE
VBAT_S_CONN
VBAT_GND_CONN
VBAT_S
FG I2C_SCL
FG I2C_SDA
SCL0
SDA0
SC5561_MASTER_INT
SC5561_SYNC
SC5561_EN
SC5561_nEPM
SC5561_SLAVE_INT
SCL7
SDA7
DVDD_GPU_PMIC_FB/DVDD_APU_PMIC_FB/DVDD_EMI_VIDEO_PMIC_FB/DVDD_EMI_VIDEO_PMIC_FB
DVDD_GPU_PMIC_GND/DVDD_EMI_VIDEO_PMIC_FB/DVDD_EMI_VIDEO_PMIC_FB/DVDD_EMI_VIDEO_PMIC_GND/DVDD_EMI_VMDDR_PMIC_GND
VSYS
VPA_PMU
DVDD_GPU
DVDD_APU
EMI_VIDEO
DVDD_EMI
VSI_PMU
VIO_S
VAUD18_PMU
VANT18_PMU
AIF AVDD18_PMU
VCN33_1_PMU
VBIF28_PMU
VSIM2_PMU
VSIM1_PMU
VIBR_PMU
VIO_FPS_PMU
VIO_FPS_PMU
AVDD50_PMU
VSIM_EXT_PMU
VSRAM_DRAM_PMU
DVDD_SRAM_MODEM
VTBBFE_MT6368
VSIM_EXT_PMU
VSYS
DVDD_PROC_B
DVDD_MM
VIO18_PMU
DVDD_PROC_M
DVDD_PROC_L
VIO18_PMU
DVDD_SRAM_MODEM_PMIC_FB
SRAM_MODEM
SCP_VBBV_VGO
PSREN_CHG_EN0
EINT_CHG_IRQ0
VSYS
SCL5
SDA5
CHG_PGND
VIO18_PMU
VDDA
VBAT
VSYS
PWRKEY
KPCOL0
USB_OVP_VBUS
VUFS_PMU
VUFS25_EXT
VCC_UFS_MT6663
VUFS12_PMU
VUFS12_PMU_FB
VA12_2_PMU
VA12_PMU
VA12_1_PMU
AVDD12_DRF_D
VUSB_PMU
VUSB_PMU
DVDD_SRAM_CORE
VBBCK_PMU
VEFUSE_PMU
VIO18_PMU
VA12_ABB1_PMU
VSIM2_PMU
VSIM1_PMU
VIO075_PMU
VIO075_PMU