鑫智造智能终端设备维修查询系统
XinZhiZao Maintenance Inquiry System

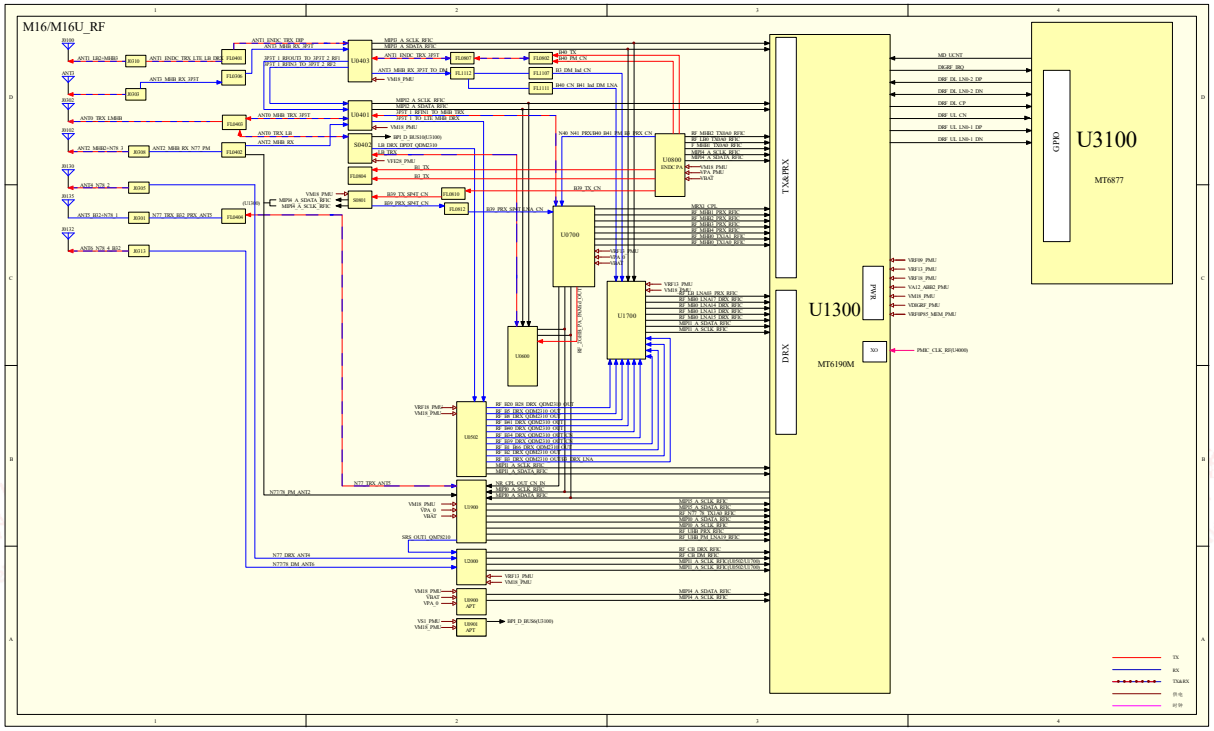

鑫智造智能终端设备维修查询系统
XinZhiZao Maintenance Inquiry System

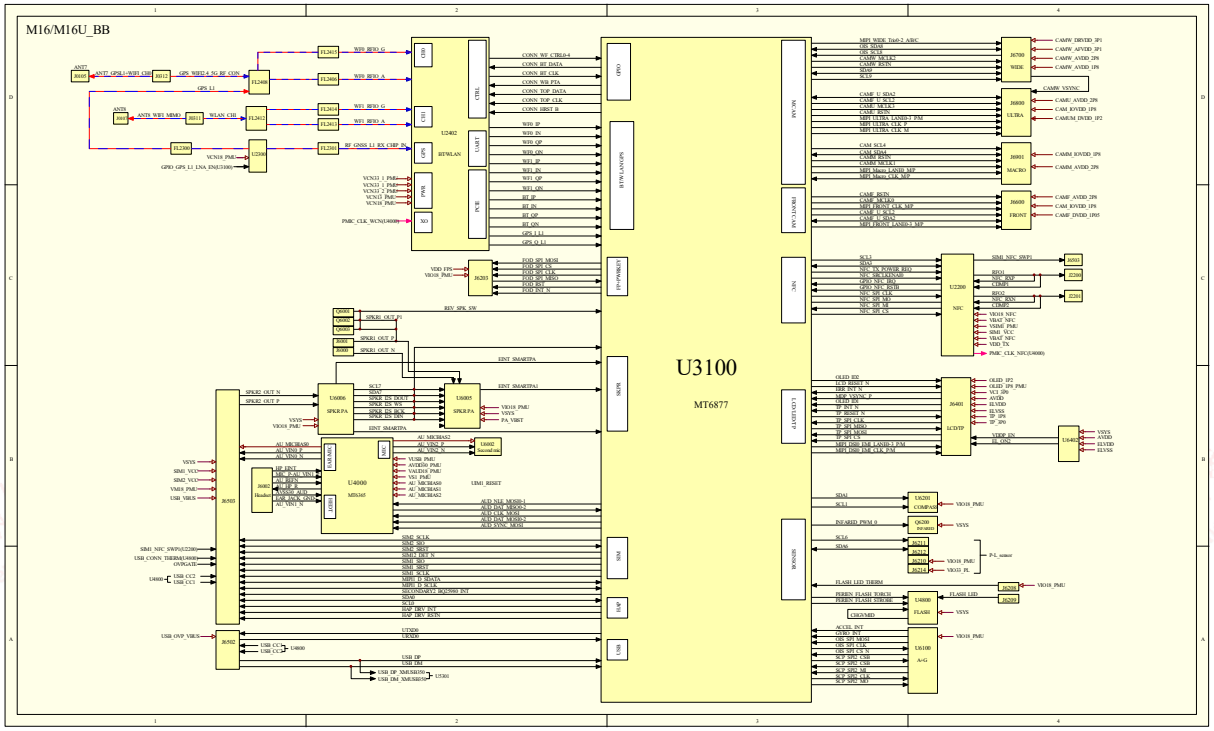

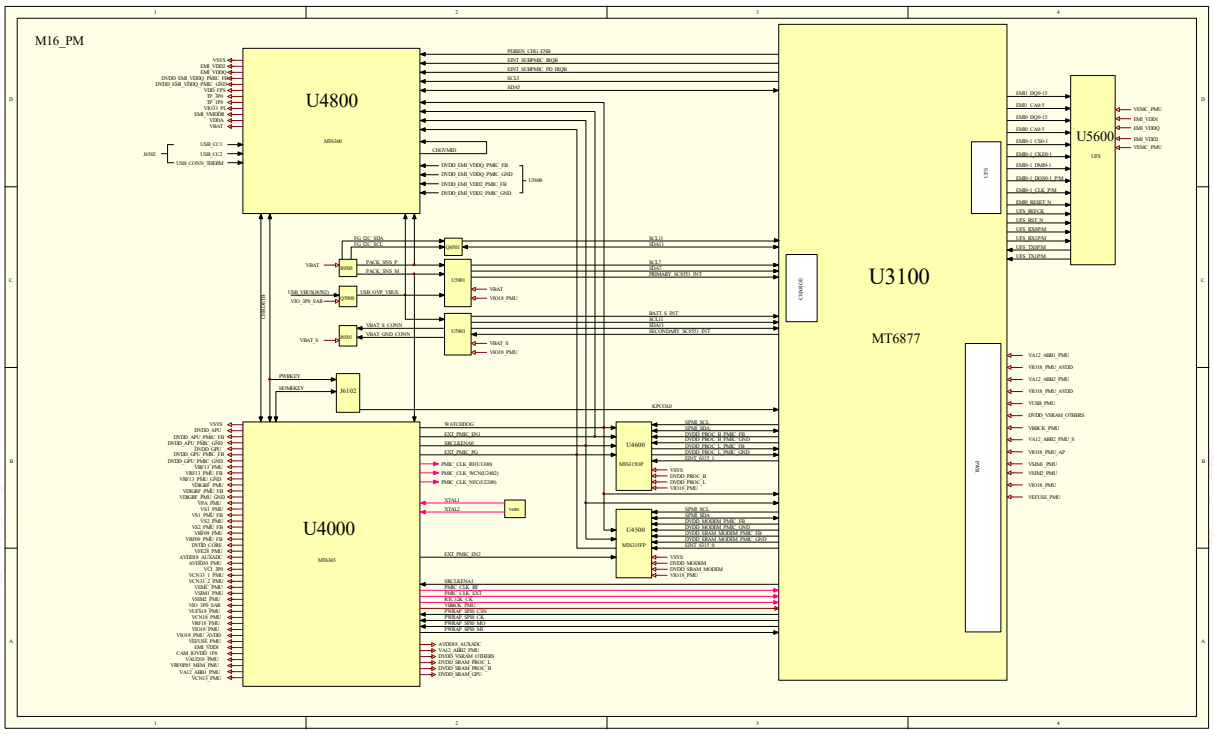
M16_PM
U4800
MT6360
U3100
MT6877
U5600
UFS
U4000
MT6365
U4600
MT6315OP
U4500
MT6315FP
U5601
U5602
U5603
U5604
U5605
U5606
U5607
U5608
J6102
CHRAGE
PMIC
DIGRFUTB

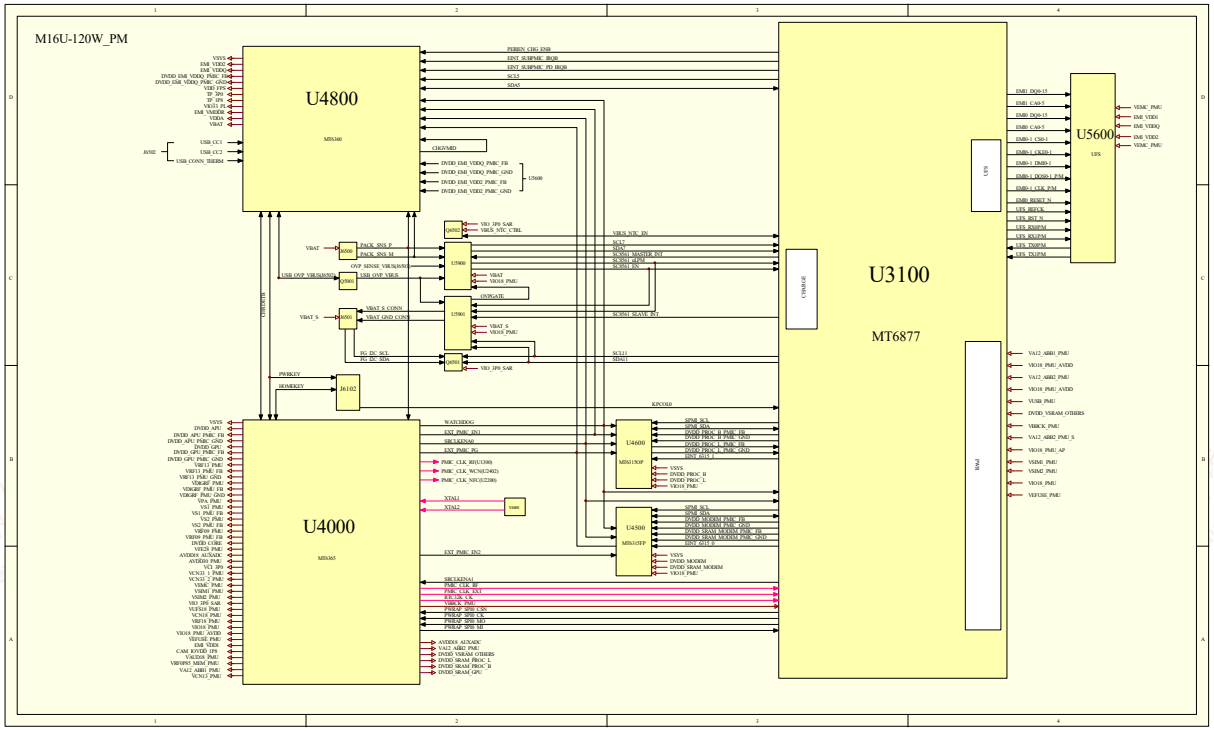
M16U-120W_PM
U4800
MT6360
U4000
MT6365
U3100
MT6877
U5600
UFS
U4600
MT6315OP
U4500
MT6315FP
CHARGE
PMIC
PERIEN_CHG_ENB
EINT_SUBPMIC_IRQR
EINT_SUBPMIC_PD_IRQR
SCL5
SDA5
CHGVMID
DVDD_EMI_VDDQ_PMIC_FB
DVDD_EMI_VDDQ_PMIC_GND
DVDD_EMI_VDD2_PMIC_FB
DVDD_EMI_VDD2_PMIC_GND
VIO_2P9_SAR
VBUS_NTC_CTRL
VBUS_NTC_IN
SCL7
SDA7
SCSN1_MASTER_INT
SCSN1_HOST
SCSN1_IN
VBAT
VIO18_PMU
CHPGATE
SCSN1_SLAVE_INT
VBAT_S
SCL11
SDA11
PWRKEY
HOMEKEY
KPCOL0
WATCHDOG
EXT_PMIC_IN1
SRCLKENA0
EXT_PMIC_IN2
PMIC_CLK_RF(U3100)
PMIC_CLK_WCN(U2402)
PMIC_CLK_NFC(U2200)
XTAL1
XTAL2
SPMI_SCL
SPMI_SDA
DVDD_PROC_B_PMIC_FB
DVDD_PROC_B_PMIC_GND
DVDD_PROC_L_PMIC_FB
DVDD_PROC_L_PMIC_GND
DVDD_SRAM_MODEM_PMIC_FB
DVDD_SRAM_MODEM_PMIC_GND
EMI1_DQ0-15
EMI1_CA0-5
EMI0_DQ0-15
EMI0_CA0-5
EMI0-1_CS0-1
EMI0-1_CKE0-1
EMI0-1_DM0-1
EMI0-1_DQS0-1_P/M
EMI0-1_CLK_P/M
EMI0_RESET_N
UFS_REFCLK
UFS_RST_N
UFS_RX0P/M
UFS_RX1P/M
UFS_TX0P/M
UFS_TX1P/M
VA12_ABB1_PMU
VIO18_PMU_AVDD
VA12_ABB2_PMU
VIO18_PMU_AVDD
VUSB_PMU
DVDD_VSRAM_OTHERS
VBRCK_PMU
VA12_ABB2_PMU_S
VIO18_PMU_AP
VSIM1_PMU
VSIM2_PMU
VIO18_PMU
VEFUSE_PMU
VSYS
EMI_VDD1
EMI_VDD2
DVDD_EMI_VDDQ_PMIC_FB
DVDD_EMI_VDDQ_PMIC_GND
VDD_FP5
VDD_FP6
SP_FP9
VRF13_PU
EMI_VMEM
VDDA
VBA1
USB_CC1
USB_CC2
USB_CONN_THERM
JS102
DVDD_APU
DVDD_APU_PMIC_FB
DVDD_APU_PMIC_GND
DVDD_GPU
DVDD_GPU_PMIC_FB
DVDD_GPU_PMIC_GND
VRF11_PMU
VRF11_PMIC_FB
VRF11_PMIC_GND
VDIG18_PMU
VDIG18_PMIC_FB
VDIG18_PMIC_GND
VPA_PMU
VS1_PMU
VS1_PMIC_FB
VS2_PMU
VS2_PMIC_FB
VRF09_PMU
VRF09_PMIC_FB
DVDD_CORE
VCN33_1_PMU
AVDD18_AUXADC
AVDD18_PMU
VCI_2P8
VCN33_1_PMU
VCN33_2_PMU
VSIM1_PMU
VSIM2_PMU
VIO_2P9_SAR
VUFS18_PMU
VCN18_PMU
VRF18_PMU
VIO18_PMU
VIO18_PMIC_AVDD
VTCXO_PMU
EMI_VDD1
CAM_AVDD_1P8
VAUD18_PMU
VRFIO18_MEM_PMU
VA12_ABB1_PMU
VCN13_PMU
AVDD18_AUXADC
VA12_ABB2_PMU
DVDD_VSRAM_OTHERS
DVDD_SRAM_PROC_L
DVDD_SRAM_PROC_B
DVDD_SRAM_GPU

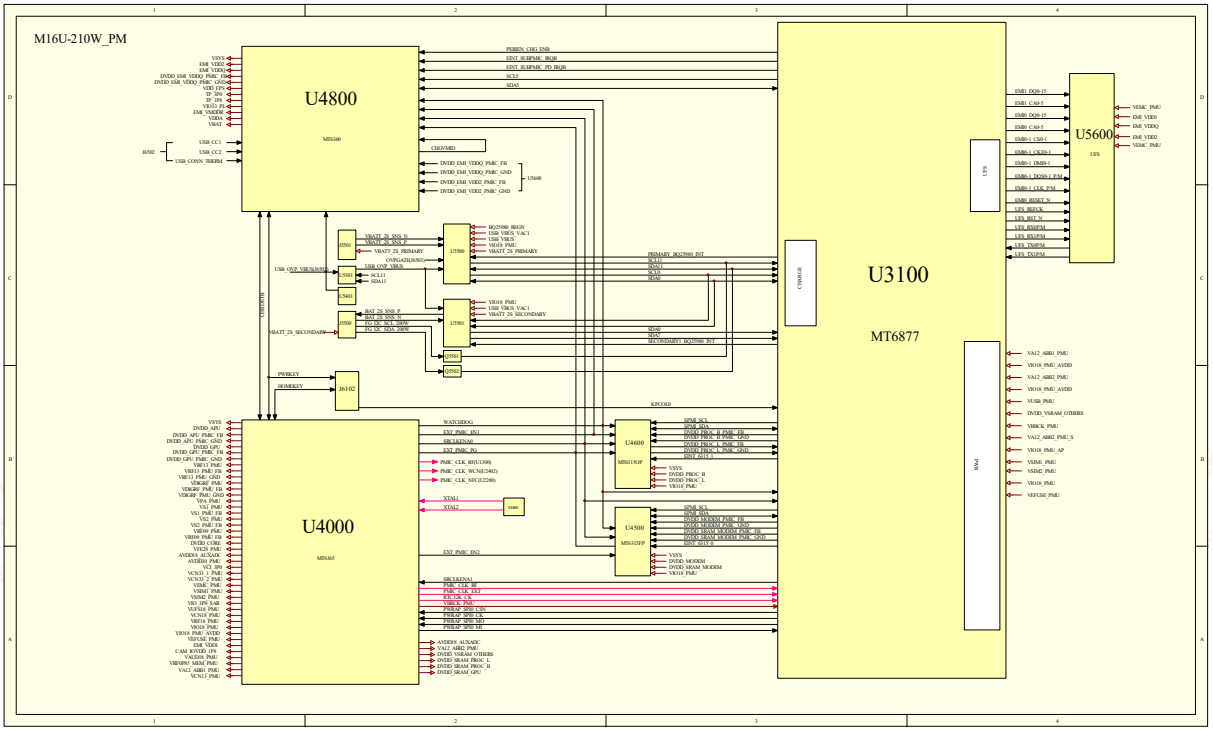
M16U-210W_PM
U4800
MT6360
U3100
MT6877
U5600
UFS
U4000
MT6365
U4600
MT6315OP
U4500
MT6315FP
J6102
U5000
U5001
U5002
U5003
U5004
U5005
U5006
U5007
U5008
U5009
U5010
U5011
U5012
U5013
U5014
U5015
U5016
U5017
U5018
U5019
U5020
U5021
U5022
U5023
U5024
U5025
U5026
U5027
U5028
U5029
U5030
U5031
U5032
U5033
U5034
U5035
U5036
U5037
U5038
U5039