PRIMARY MIC

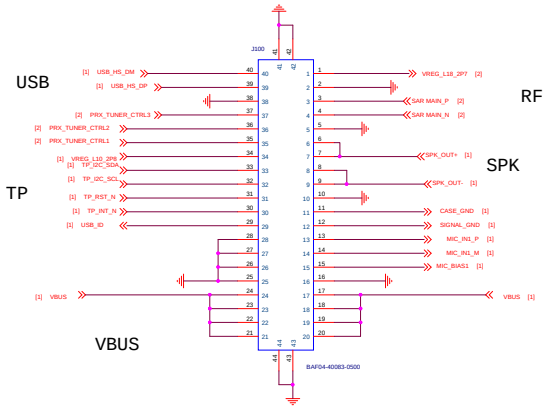

SPK

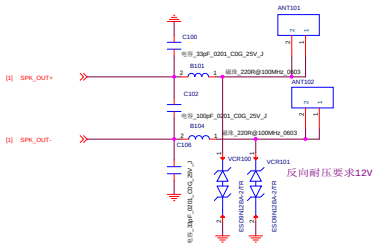

TP

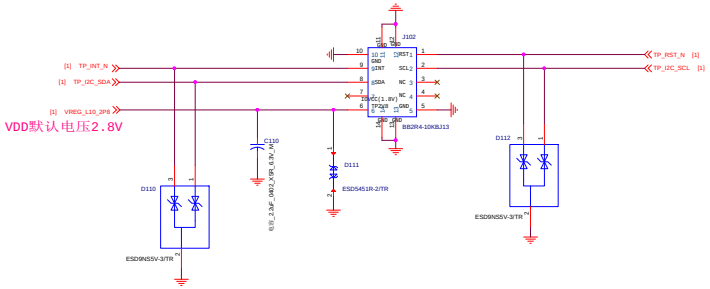

5 PIN IO Connection

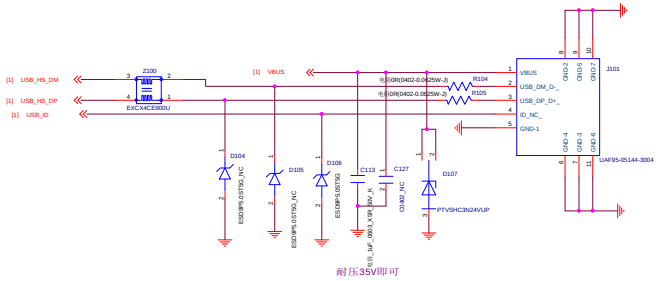

MAIN MIC

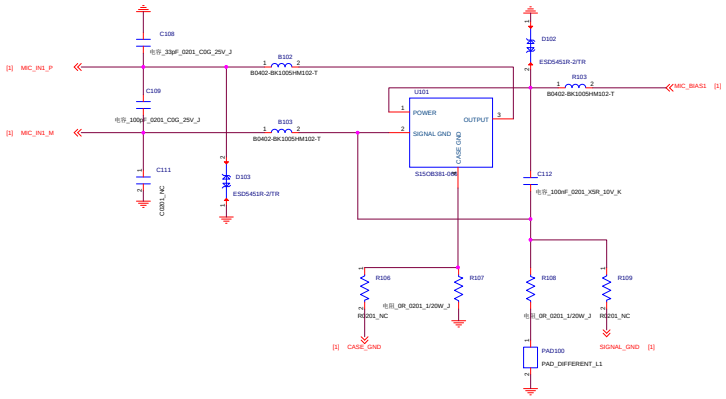

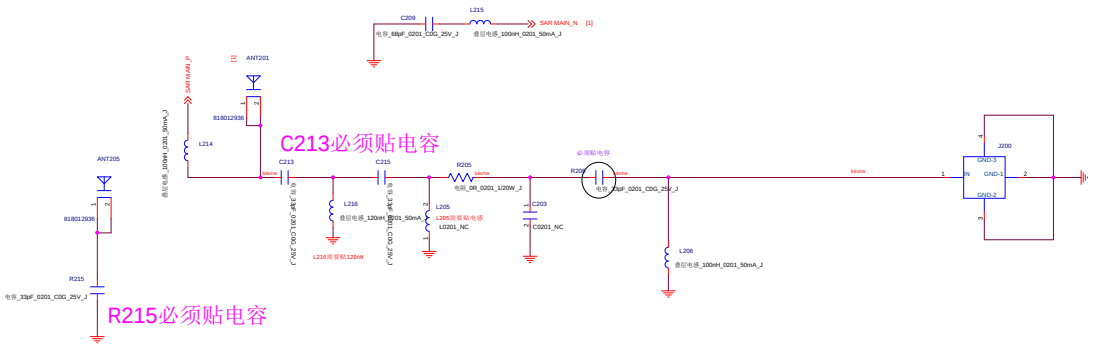
C209
电容_68pF_0201_C0G_25V_J
L215
叠层电感_100nH_0201_50mA_J
SAR MAIN_N [1]
ANT201
818012936
SAR MAIN_P
L214
叠层电感_100nH_0201_50mA_J
C213必须贴电容
ANT205
818012936
R215
电容_33pF_0201_C0G_25V_J
R215必须贴电容
C213
电容_8pF_0201_C0G_25V_J
L216
叠层电感_120nH_0201_50mA_J
L216需要贴120nH
C215
电容_8pF_0201_C0G_25V_J
R205
电阻_0R_0201_1/20W_J
L205
L205需要贴电感
L0201_NC
C203
C0201_NC
必须贴电容
R207
电容_33pF_0201_C0G_25V_J
L206
叠层电感_100nH_0201_50mA_J
J200
GND-3
GND-1
GND-2
IN

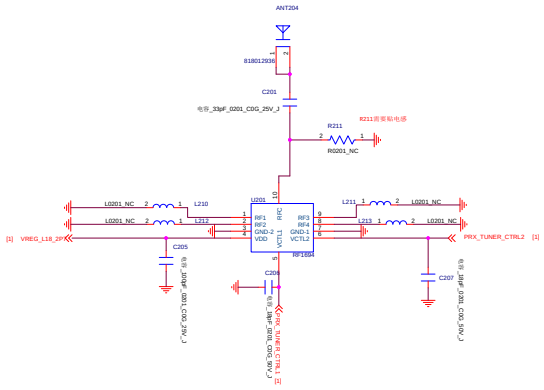
ANT204
818012936
C201
电容_33pF_0201_C0G_25V_J
R211
R211需要贴电感
R0201_NC
U201
RF1
RF2
GND-2
VDD
FRC
RF3
RF4
GND-1
VCTL1
VCTL2
RF1884
L0201_NC
L210
L212
L211
L213
[1] VREG_L18_2P
PRX_TUNER_CTRL2 [1]
C205
电容_8pF_0201_C0G_25V_J
C204
电容_8pF_0201_C0G_25V_J
C207
电容_8pF_0201_C0G_25V_J
PRX_TUNER_CTRL1 [1]