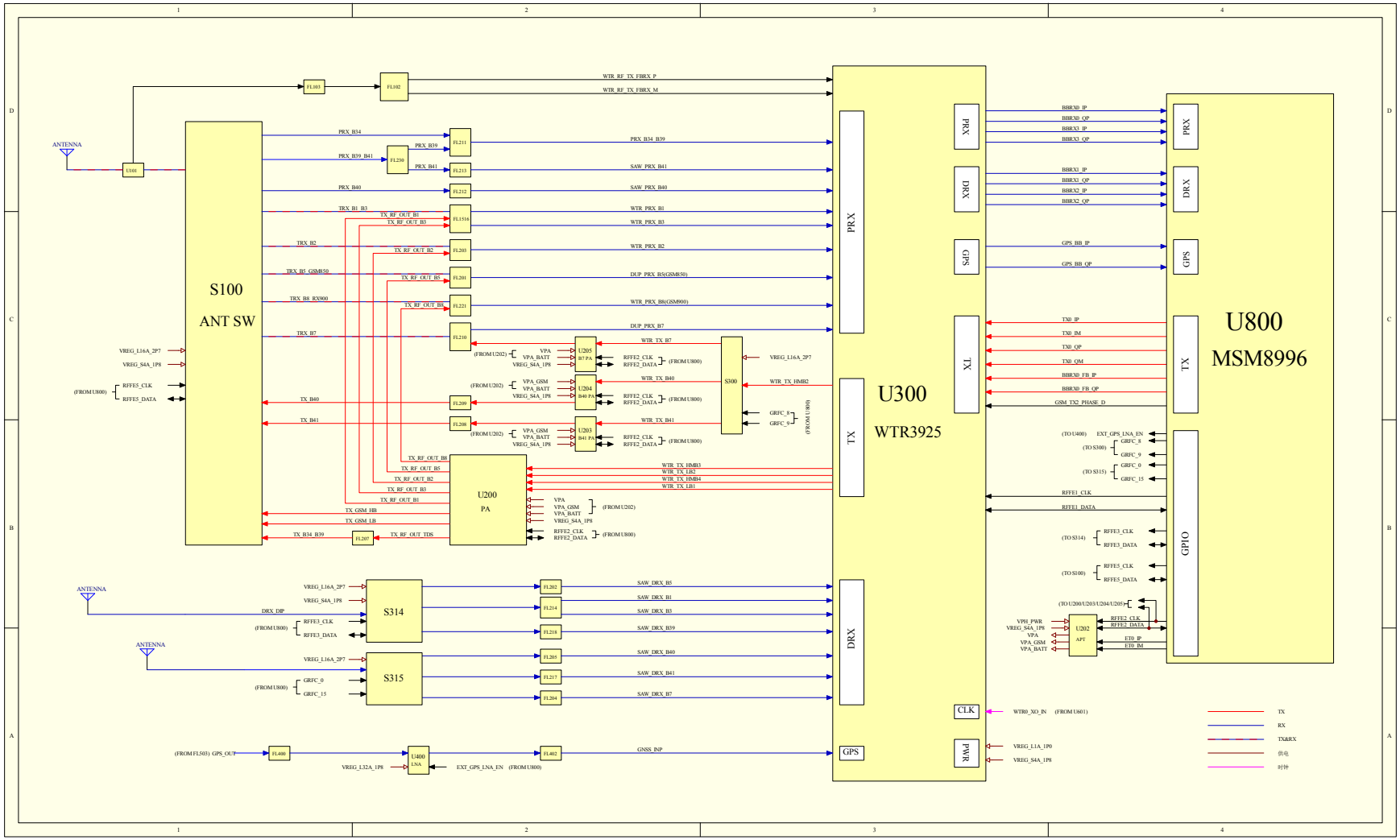
S100
ANT SW
U300
WTR3925
U800
MSM8996
U200
PA
S314
S315
U400
LNA
U202
APT
U205
B7 PA
U204
B40 PA
U203
B41 PA
S300
ANTENNA
U101
FL103
FL102
FL211
FL213
FL212
FL1516
FL203
FL201
FL221
FL210
FL209
FL208
FL207
FL230
FL202
FL214
FL218
FL205
FL217
FL204
FL400
FL402
PRX
DRX
GPS
TX
CLK
PWR
GPIO
WTR_RF_TX_FBRX_P
WTR_RF_TX_FBRX_M
PRX_B34
PRX_B39
PRX_B39_B41
PRX_B41
PRX_B40
TRX_B1_B3
TRX_B2
TRX_B5_GSM850
TRX_B8_RX900
TRX_B7
TX_B40
TX_B41
TX_RF_OUT_B1
TX_RF_OUT_B3
TX_RF_OUT_B2
TX_RF_OUT_B5
TX_RF_OUT_B8
TX_GSM_HB
TX_GSM_LB
TX_B34_B39
TX_RF_OUT_TDS
PRX_B34_B39
SAW_PRX_B41
SAW_PRX_B40
WTR_PRX_B1
WTR_PRX_B3
WTR_PRX_B2
DUP_PRX_B5(GSM850)
WTR_PRX_B8(GSM900)
DUP_PRX_B7
WTR_TX_B7
WTR_TX_B40
WTR_TX_B41
WTR_TX_HMB3
WTR_TX_LB2
WTR_TX_HMB4
WTR_TX_LB1
WTR_TX_HMB2
VREG_L16A_2P7
VREG_S4A_1P8
RFFE5_CLK
RFFE5_DATA
(FROM U800)
(FROM U202)
VPA
VPA_BATT
VPA_GSM
RFFE2_CLK
RFFE2_DATA
GRFC_8
GRFC_9
DRX_DIP
RFFE3_CLK
RFFE3_DATA
GRFC_0
GRFC_15
SAW_DRX_B5
SAW_DRX_B1
SAW_DRX_B3
SAW_DRX_B39
SAW_DRX_B40
SAW_DRX_B41
SAW_DRX_B7
(FROM FL503) GPS_OUT
VREG_L32A_1P8
EXT_GPS_LNA_EN
GNSS_INP
BBRX0_IP
BBRX0_QP
BBRX3_IP
BBRX3_QP
BBRX1_IP
BBRX1_QP
BBRX2_IP
BBRX2_QP
GPS_BB_IP
GPS_BB_QP
TX0_IP
TX0_IM
TX0_QP
TX0_QM
BBRX0_FB_IP
BBRX0_FB_QP
GSM_TX2_PHASE_D
(TO U400)
(TO S300)
(TO S315)
RFFE1_CLK
RFFE1_DATA
(TO S314)
(TO S100)
(TO U200/U203/U204/U205)
VPH_PWR
ET0_IP
ET0_IM
WTR0_XO_IN
(FROM U601)
VREG_L1A_1P0
TX
RX
TX&RX
供电
时钟

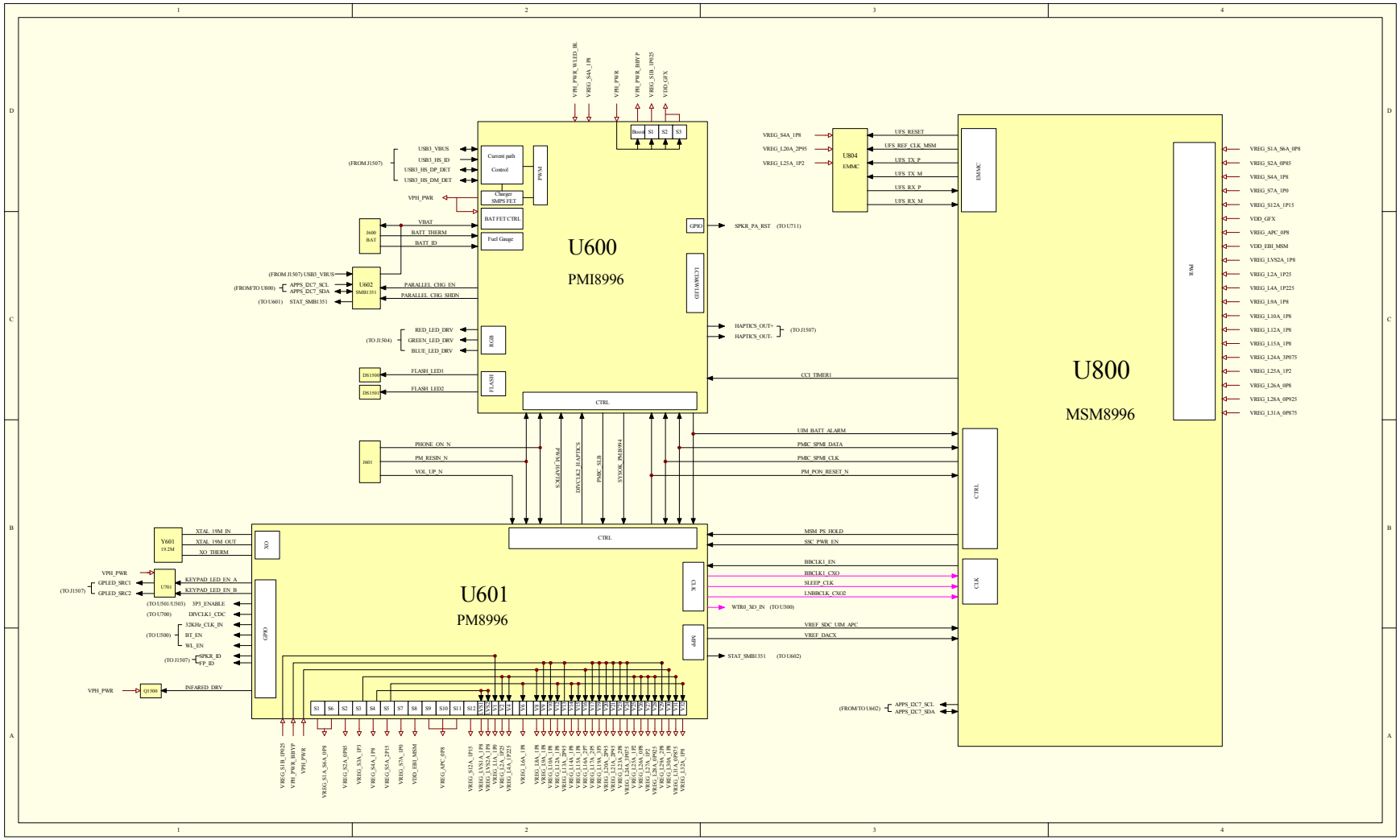
U600
PMI8996
U800
MSM8996
U601
PM8996
U604
EMMC
J600
BAT
U602
SMB1351
J601
V601
19.2M
U701
Q1500
Current path
Control
Charger
SMPS FET
BAT FET CTRL
Fuel Gauge
PWM
RGB
FLASH
GPIO
CTRL
XO
CLK
APP
EMMC
PWR
VPH_PWR_WLED_BL
VREG_S4A_1P8
VPH_PWR
VPH_PWR_BBVP
VREG_S1B_1P025
VDD_GFX
USB3_VBUS
USB3_HS_ID
USB3_HS_DP_DET
USB3_HS_DM_DET
(FROM J1507)
VBAT
BATT_THERM
BATT_ID
(FROM J1507) USB3_VBUS
(FROM/TO U800)
APPS_I2C7_SCL
APPS_I2C7_SDA
(TO U601)
STAT_SMB1351
PARALLEL_CHG_EN
PARALLEL_CHG_SHDN
(TO J1504)
RED_LED_DRV
GREEN_LED_DRV
BLUE_LED_DRV
FLASH_LED1
FLASH_LED2
PHONE_ON_N
PM_RESIN_N
VOL_UP_N
SCALPVIT POM
DIVCLK2 HAPTICS
PMIC_S1B
SYSON_PG1B904
XTAL_19M_IN
XTAL_19M_OUT
XO_THERM
VPH_PWR
GPLED_SRC1
GPLED_SRC2
(TO J1507)
KEYPAD_LED_EN_A
KEYPAD_LED_EN_B
(TO U501/U503)
3P3_ENABLE
(TO U700)
DIVCLK1_CDC
32KHz_CLK_IN
(TO U500)
BT_EN
WI_EN
SPKR_ID
(TO J1507)
FP_ID
INFARED_DRV
VREG_S4A_1P8
VREG_L20A_2P95
VREG_L25A_1P2
UFS_RESET
UFS_REF_CLK_MSM
UFS_TX_P
UFS_TX_M
UFS_RX_P
UFS_RX_M
SPKR_PA_RST (TO U711)
HAPTICS_OUT+
HAPTICS_OUT-
(TO J1507)
CCI_TIMER1
UIM_BATT_ALARM
PMIC_SPMI_DATA
PMIC_SPMI_CLK
PM_PON_RESET_N
MSM_PS_HOLD
SSC_PWR_EN
BBCLK1_EN
BBCLK1_CXO
SLEEP_CLK
LNBBCLK_CXO2
WTR0_XO_IN (TO U300)
VREF_SDC_UIM_APC
VREF_DACX
STAT_SMB1351 (TO U602)
(FROM/TO U602)
APPS_I2C7_SCL
APPS_I2C7_SDA
VREG_S1A_S6A_0P8
VREG_S2A_0P85
VREG_S4A_1P8
VREG_S7A_1P0
VREG_S12A_1P15
VDD_GFX
VREG_APC_0P8
VDD_EBI_MSM
VREG_LVS2A_1P8
VREG_L2A_1P25
VREG_L4A_1P225
VREG_L9A_1P8
VREG_L10A_1P8
VREG_L12A_1P8
VREG_L15A_1P8
VREG_L24A_3P075
VREG_L25A_1P2
VREG_L26A_0P8
VREG_L28A_0P925
VREG_L31A_0P875

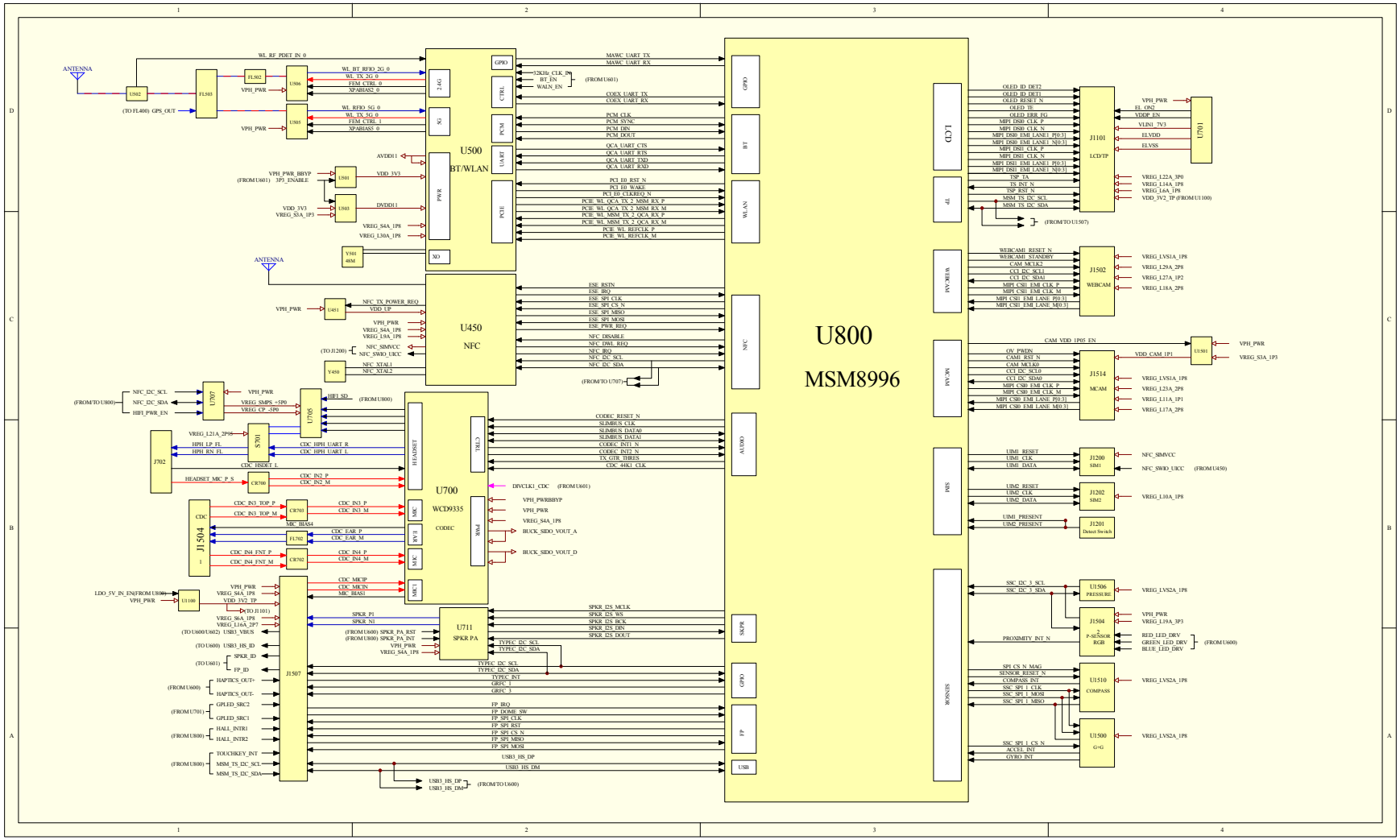
U800
MSM8996
U500
BT/WLAN
U450
NFC
U700
WCD9335
CODEC
U711
SPKR PA
LCD
TP
WEBCAM
MCAM
SIM
SENSOR
J1101
LCD/TP
J1502
WEBCAM
J1514
MCAM
J1200
SIM1
J1202
SIM2
J1201
Detect Switch
U1506
PRESSURE
J1504
P-SENSOR RGB
U1510
COMPASS
U1500
G+G
J1507
J1504
ANTENNA
(TO FL400) GPS_OUT
(FROM/TO U1507)
(FROM/TO U800)
(FROM/TO U600)
(FROM U601)
(FROM U450)
(FROM U600)
(FROM U701)
(FROM U800)
(TO U600/U602)
(TO U600)
(TO U601)
(TO J1101)
(TO J1200)
(FROM/TO U707)