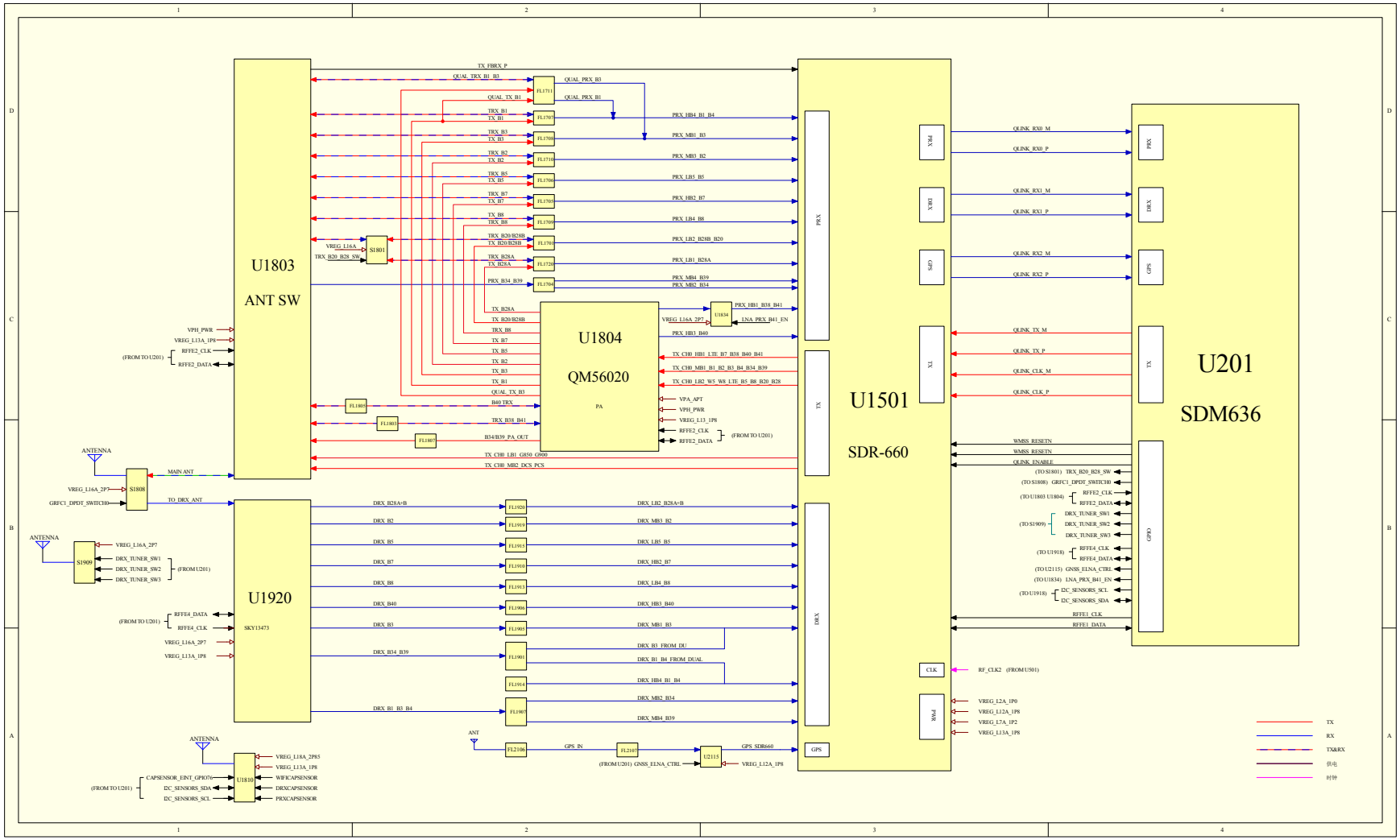
U1803
ANT SW
U1804
QM56020
PA
U1501
SDR-660
U201
SDM636
U1920
SKY13473
U1810
S1801
S1808
S1909
U1834
U2115
FL1711
FL1707
FL1708
FL1710
FL1706
FL1705
FL1709
FL1703
FL1720
FL1704
FL1805
FL1803
FL1807
FL1928
FL1919
FL1915
FL1916
FL1913
FL1906
FL1905
FL1901
FL1914
FL1907
FL2106
FL2107
PRX
TX
DRX
GPS
X304
X301
SAP3
XL
CLK
RWd
PRX
DRX
GPS
TX
GPIO
TX_FBRX_P
QUAL_TRX_B1_B3
QUAL_PRX_B3
QUAL_TX_B1
QUAL_PRX_B1
TRX_B1
TX_B1
TRX_B3
TX_B3
TRX_B2
TX_B2
TRX_B5
TX_B5
TRX_B7
TX_B7
TX_B8
TRX_B8
TRX_B20/B28B
TX_B20/B28B
TRX_B28A
TX_B28A
PRX_B34_B39
PRX_HB4_B1_B4
PRX_MB1_B3
PRX_MB3_B2
PRX_LB5_B5
PRX_HB2_B7
PRX_LB4_B8
PRX_LB2_B28B_B20
PRX_LB1_B28A
PRX_MB4_B39
PRX_MB2_B34
VREG_L16A
TRX_B20_B28_SW
VPH_PWR
VREG_L13A_1P8
RFFE2_CLK
RFFE2_DATA
(FROM TO U201)
TX_B28A
TX_B20/B28B
TRX_B8
TX_B7
TX_B5
TX_B2
TX_B3
TX_B1
QUAL_TX_B3
B40 TRX
TRX_B38_B41
B34/B39_PA_OUT
TX_CH0_LB1_GB50_G900
TX_CH0_MB2_DCS_PCS
PRX_HB1_B38_B41
VREG_L16A_2P7
LNA_PRX_B41_EN
PRX_HB3_B40
TX_CH0_HB1_LTE_B7_B38_B40_B41
TX_CH0_MB1_B1_B2_B3_B4_B34_B39
TX_CH0_LB2_W5_W8_LTE_B5_B8_B20_B28
VPA_APT
VPH_PWR
VREG_L13_1P8
RFFE2_CLK
RFFE2_DATA
(FROM TO U201)
ANTENNA
MAIN ANT
VREG_L16A_2P7
GRFC1_DPDT_SWITCH0
TO_DRX_ANT
ANTENNA
VREG_L16A_2P7
DRX_TUNER_SW1
DRX_TUNER_SW2
DRX_TUNER_SW3
(FROM U201)
(FROM TO U201)
RFFE4_DATA
RFFE4_CLK
VREG_L16A_2P7
VREG_L13A_1P8
DRX_B28A+B
DRX_B2
DRX_B5
DRX_B7
DRX_B8
DRX_B40
DRX_B3
DRX_B34_B39
DRX_B1_B3_B4
DRX_LB2_B28A+B
DRX_MB3_B2
DRX_LB5_B5
DRX_HB2_B7
DRX_LB4_B8
DRX_HB3_B40
DRX_MB1_B3
DRX_B3_FROM_DU
DRX_B1_B4_FROM_DUAL
DRX_HB4_B1_B4
DRX_MB2_B34
DRX_MB4_B39
ANTENNA
VREG_L18A_2P85
VREG_L13A_1P8
WIFICAPSENSOR
DRXCAPSENSOR
PRXCAPSENSOR
(FROM TO U201)
CAPSENSOR_EINT_GPIO76
I2C_SENSORS_SDA
I2C_SENSORS_SCL
ANT
GPS_IN
(FROM U201) GNSS_ELNA_CTRL
GPS_SDR660
VREG_L12A_1P8
QLINK_RX0_M
QLINK_RX0_P
QLINK_RX1_M
QLINK_RX1_P
QLINK_RX2_M
QLINK_RX2_P
QLINK_TX_M
QLINK_TX_P
QLINK_CLK_M
QLINK_CLK_P
WMSS_RESETN
WMSS_RESETN
QLINK_ENABLE
(TO S1801) TRX_B20_B28_SW
(TO S1808) GRFC1_DPDT_SWITCH0
(TO U1803 U1804) RFFE2_CLK
RFFE2_DATA
(TO S1909) DRX_TUNER_SW1
DRX_TUNER_SW2
DRX_TUNER_SW3
(TO U1918) RFFE4_CLK
RFFE4_DATA
(TO U2115) GNSS_ELNA_CTRL
(TO U1834) LNA_PRX_B41_EN
(TO U1918) I2C_SENSORS_SCL
I2C_SENSORS_SDA
RFFE1_CLK
RFFE1_DATA
RF_CLK2 (FROM US01)
VREG_L2A_1P0
VREG_L12A_1P8
VREG_L7A_1P2
VREG_L13A_1P8
TX
RX
TX&RX
供电
时钟

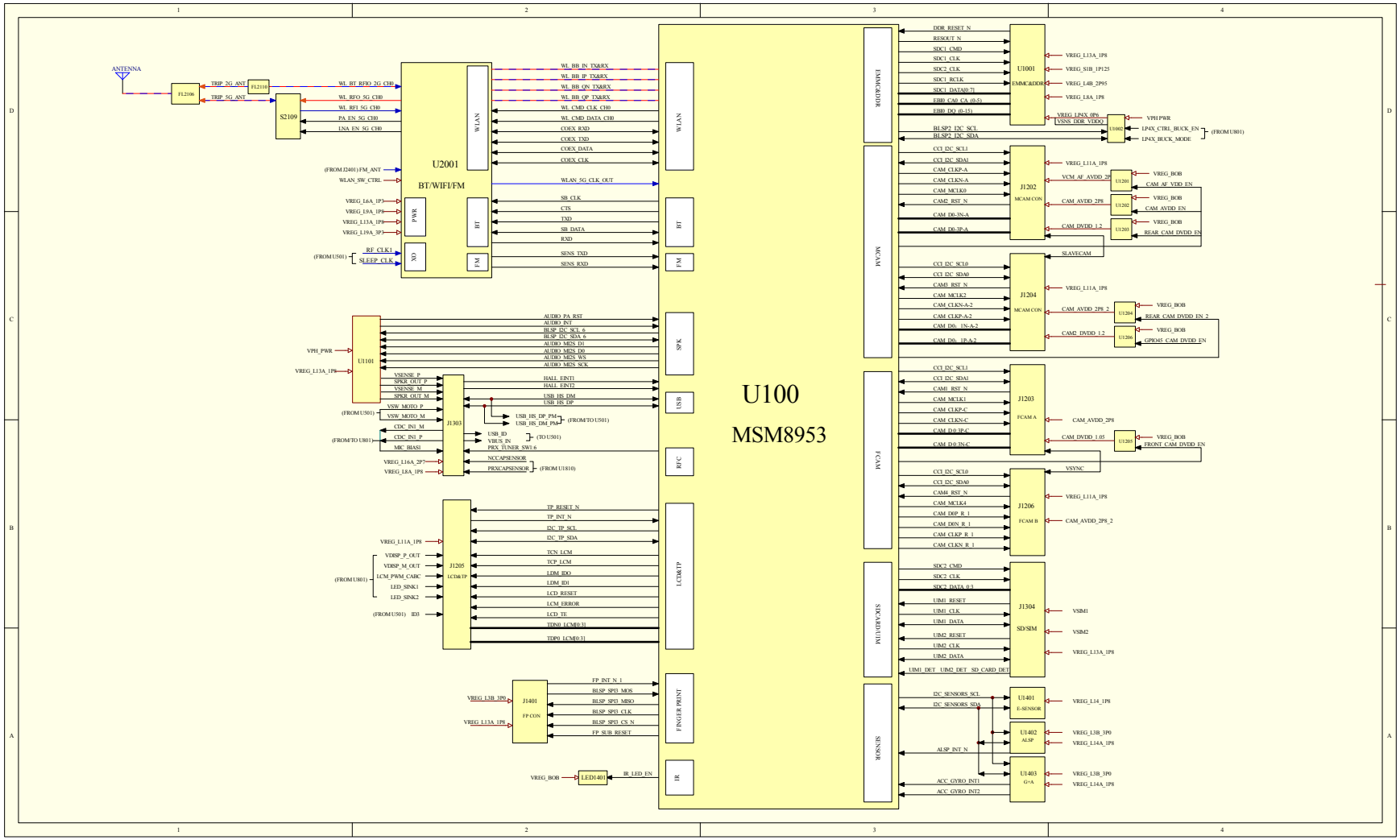
ANTENNA
FL2106
TRIP_2G_ANT
TRIP_5G_ANT
FL2110
S2109
WL_BT_RFIO_2G_CH0
WL_RFO_5G_CH0
WL_RFI_5G_CH0
PA_EN_5G_CH0
LNA_EN_5G_CH0
U2001
BT/WIFI/FM
WLAN
PWR
XO
BT
FM
(FROM J2401) FM_ANT
WLAN_SW_CTRL
VREG_L6A_1P3
VREG_L9A_1P3
VREG_L13A_1P3
VREG_L19A_3P3
(FROM U501)
RF_CLK1
SLEEP_CLK
WL_BB_IN_TX&RX
WL_BB_IP_TX&RX
WL_BB_QN_TX&RX
WL_BB_QP_TX&RX
WL_CMD_CLK_CH0
WL_CMD_DATA_CH0
COEX_RXD
COEX_TXD
COEX_DATA
COEX_CLK
WLAN_5G_CLK_OUT
SB_CLK
CTS
TXD
SB_DATA
RXD
SENS_TXD
SENS_RXD
U100
MSM8953
EMMC&DDR
WLAN
BT
FM
SPK
USB
RFC
LCD&TP
FINGER PRINT
IR
U1001
EMMC&DDR
DDR_RESET_N
RESOUT_N
SDC1_CMD
SDC1_CLK
SDC2_CLK
SDC1_RCLK
SDC1_DATA[0:7]
EBI0_CA0_CA (0-5)
EBI0_DQ (0-15)
VREG_L13A_1P8
VREG_S1B_1P125
VREG_L4B_2P95
VREG_L8A_1P8
VREG_LP4X_0P6
VSNS_DDR_VDDQ
U1002
VPH PWR
LP4X_CTRL_BUCK_EN
LP4X_BUCK_MODE
(FROM U801)
BLSP2_I2C_SCL
BLSP2_I2C_SDA
VCAM
J1202
MCAM CON
CCI_I2C_SCL1
CCI_I2C_SDA1
CAM_CLKP-A
CAM_CLKN-A
CAM_MCLK0
CAM2_RST_N
CAM_D0-3N-A
CAM_D0-3P-A
VREG_L11A_1P8
VCM_AF_AVDD_2P8
U1201
VREG_BOB
CAM_AF_VDD_EN
CAM_AVDD_2P8
U1202
CAM_AVDD_EN
CAM_DVDD_1.2
U1203
REAR_CAM_DVDD_EN
SLAVECAM
J1204
MCAM CON
CCI_I2C_SCL0
CCI_I2C_SDA0
CAM3_RST_N
CAM_MCLK2
CAM_CLKN-A-2
CAM_CLKP-A-2
CAM_D0_1N-A-2
CAM_D0_1P-A-2
CAM_AVDD_2P8_2
U1204
REAR_CAM_DVDD_EN_2
CAM2_DVDD_1.2
U1206
GPIO45_CAM_DVDD_EN
FCAM
J1203
FCAM A
CCI_I2C_SCL1
CCI_I2C_SDA1
CAM1_RST_N
CAM_MCLK1
CAM_CLKP-C
CAM_CLKN-C
CAM_D0-2P-C
CAM_D0-2N-C
CAM_AVDD_2P8
CAM_DVDD_1.05
U1205
FRONT_CAM_DVDD_EN
VSYNC
J1206
FCAM B
CCI_I2C_SCL0
CCI_I2C_SDA0
CAM4_RST_N
CAM_MCLK4
CAM_D0P_R_1
CAM_D0N_R_1
CAM_CLKP_R_1
CAM_CLKN_R_1
VREG_L11A_1P8
CAM_AVDD_2P8_2
STORAGE/DTM
J1304
SD/SIM
SDC2_CMD
SDC2_CLK
SDC2_DATA_0/3
UIM1_RESET
UIM1_CLK
UIM1_DATA
UIM2_RESET
UIM2_CLK
UIM2_DATA
UIM1_DET
UIM2_DET
SD_CARD_DET
VSIM1
VSIM2
VREG_L13A_1P8
SENSOR
U1401
E-SENSOR
I2C_SENSORS_SCL
I2C_SENSORS_SDA
VREG_L14_1P8
U1402
ALSP
ALSP_INT_N
VREG_L3B_3P0
VREG_L14A_1P8
U1403
G+A
ACC_GYRO_INT1
ACC_GYRO_INT2
U101
VPH_PWR
VREG_L13A_1P8
VSENSE_P
SPKR_OUT_P
VSENSE_M
SPKR_OUT_M
AUDIO_PA_RST
AUDIO_INT
BLSP_I2C_SCL_6
BLSP_I2C_SDA_6
AUDIO_M2S_D1
AUDIO_M2S_D0
AUDIO_M2S_WS
AUDIO_M2S_SCK
J1303
VSW_MOTO_P
VSW_MOTO_M
(FROM U501)
CDC_IN1_M
CDC_IN1_P
MIC_BIAS1
(FROM/TO U801)
VREG_L16A_2P7
VREG_L8A_1P8
HALL_EINT1
HALL_EINT2
USB_HS_DM
USB_HS_DP
USB_HS_DP_PM
USB_HS_DM_PM
(FROM/TO U501)
USB_ID
VBUS_IN
PRX_TUNER_SW1.6
(TO U501)
NCCAPSENSOR
PRXCAPSENSOR
(FROM U1810)
J1205
LCD&TP
TP_RESET_N
TP_INT_N
I2C_TP_SCL
I2C_TP_SDA
VREG_L11A_1P8
VDISP_P_OUT
VDISP_M_OUT
LCM_PWM_CABC
LED_SINK1
LED_SINK2
(FROM U801)
(FROM U501) ID3
TCN_LCM
TCP_LCM
LDM_IDO
LDM_ID1
LCD_RESET
LCM_ERROR
LCD_TE
TDN0_LCM[0:3]
TDP0_LCM[0:3]
J1401
FP CON
VREG_L3B_3P0
VREG_L13A_1P8
FP_INT_N_1
BLSP_SPI3_MOS
BLSP_SPI3_MISO
BLSP_SPI3_CLK
BLSP_SPI3_CS_N
FP_SUB_RESET
VREG_BOB
LED1401
BR_LED_EN

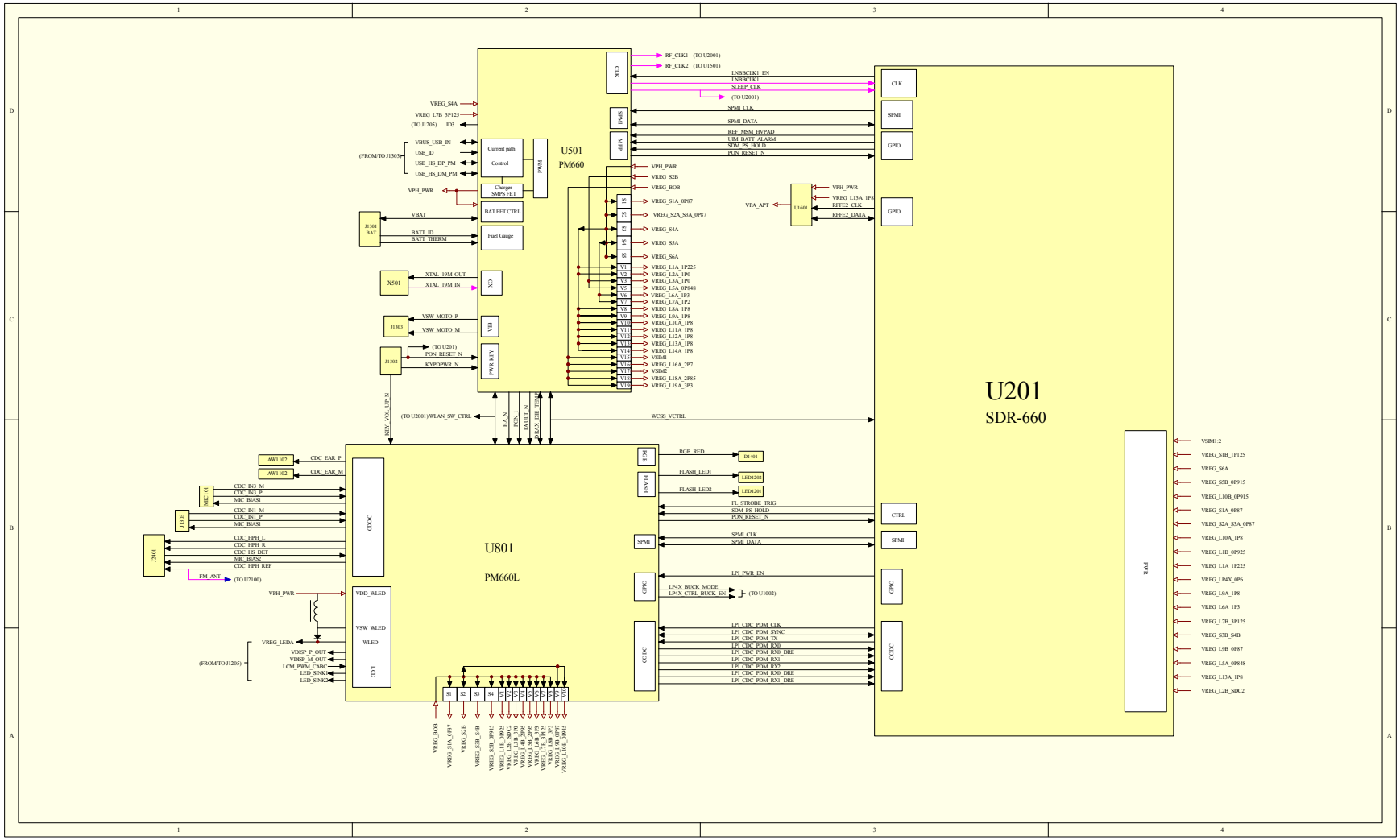
U501
PM660
U201
SDR-660
U801
PM660L
CLK
SPMI
GPIO
CTRL
CODEC
PWR
LDO
PWM
Current path Control
Charger SMPS FET
BAT FET CTRL
Fuel Gauge
XO
VIB
PWR KEY
RGB
FLASH
LCD
J301 BAT
X501
J1303
J1302
U1601
AW1102
MIC 1B
J1303
J2001
D1401
LED1202
LED1201
RF_CLK1 (TO U2001)
RF_CLK2 (TO U1501)
LNBBCLK1_EN
LNBBCLK1
SLEEP_CLK
(TO U2001)
SPMI_CLK
SPMI_DATA
REF_MSM_1PVPAD
UIM_BATT_ALARM
SDM_PS_HOLD
PON_RESET_N
VPH_PWR
VREG_S2B
VREG_BOB
VREG_S1A_0P87
VREG_S2A_S3A_0P87
VREG_S4A
VREG_S5A
VREG_S6A
VREG_L1A_1P225
VREG_L2A_1P0
VREG_L3A_1P0
VREG_L5A_0P848
VREG_L6A_1P3
VREG_L7A_1P2
VREG_L8A_1P8
VREG_L9A_1P8
VREG_L10A_1P8
VREG_L11A_1P8
VREG_L12A_1P8
VREG_L13A_1P8
VREG_L14A_1P8
VSIM1
VREG_L16A_2P7
VSIM2
VREG_L18A_2P85
VREG_L19A_3P3
VPA_APT
VREG_L13A_1P8
RFFE2_CLK
RFFE2_DATA
VREG_S4A
VREG_L7B_3P125
(TO J1205) ID3
VBUS_USB_IN
USB_ID
USB_HS_DP_PM
USB_HS_DM_PM
(FROM/TO J1303)
VBAT
BATT_ID
BATT_THERM
XTAL_19M_OUT
XTAL_19M_IN
VSW_MOTO_P
VSW_MOTO_M
(TO U201) PON_RESET_N
KYPDPWR_N
KEY_VOL_UP_N
(TO U2001) WLAN_SW_CTRL
BIA_N
VSW_LT_N
VSW_BB_N
WCSS_VCTRL
CDC_EAR_P
CDC_EAR_M
CDC_IN3_M
CDC_IN3_P
MIC_BIAS1
CDC_IN1_M
CDC_IN1_P
MIC_BIAS1
CDC_HPH_L
CDC_HPH_R
CDC_HS_DET
MIC_BIAS2
CDC_HPH_REF
FM_ANT
(TO U2100)
VPH_PWR
VDD_WLED
VSW_WLED
WLED
VREG_LEDA
VDISP_P_OUT
VDISP_M_OUT
LCM_PWM_CABC
LED_SINK1
LED_SINK2
(FROM/TO J1205)
RGB_RED
FLASH_LED1
FLASH_LED2
FL_STROBE_TRIG
SDM_PS_HOLD
PON_RESET_N
SPMI_CLK
SPMI_DATA
LPI_PWR_EN
LP4X_BUCK_MODE
LP4X_CTRL_BUCK_EN
(TO U1002)
LPI_CDC_PDM_CLK
LPI_CDC_PDM_SYNC
LPI_CDC_PDM_TX
LPI_CDC_PDM_RX0
LPI_CDC_PDM_RX0_DRE
LPI_CDC_PDM_RX1
LPI_CDC_PDM_RX2
LPI_CDC_PDM_RX0_DRE
LPI_CDC_PDM_RX1_DRE
VSIM1:2
VREG_S1B_1P125
VREG_S6A
VREG_S5B_0P915
VREG_L10B_0P915
VREG_S1A_0P87
VREG_S2A_S3A_0P87
VREG_L10A_1P8
VREG_L1B_0P925
VREG_L1A_1P225
VREG_LP4X_0P6
VREG_L9A_1P8
VREG_L6A_1P3
VREG_L7B_3P125
VREG_S3B_S4B
VREG_L9B_0P87
VREG_L5A_0P848
VREG_L13A_1P8
VREG_L2B_SDC2
VREG_BOB
VREG_S1A_0P87
VREG_S1B
VREG_S2A
VREG_S3B
VREG_S4B
VREG_L1B_0P925
VREG_L2B_SDC2
VREG_L3B_1P2
VREG_L4B_1P2
VREG_L5B_0P848
VREG_L6B_1P3
VREG_L7B_3P125
VREG_L8B_1P8
VREG_L9B_0P87
VREG_L10B_0P915
VREG_L11B_1P8
VREG_L12B_1P8
VREG_L13B_1P8
VREG_L14B_1P8
VREG_L15B_1P8
VREG_L16B_1P8
VREG_L17B_1P8
VREG_L18B_1P8
VREG_L19B_1P8
VREG_L20B_1P8
VREG_L21B_1P8
VREG_L22B_1P8
VREG_L23B_1P8
VREG_L24B_1P8
VREG_L25B_1P8
VREG_L26B_1P8
VREG_L27B_1P8
VREG_L28B_1P8
VREG_L29B_1P8
VREG_L30B_1P8
VREG_L31B_1P8
VREG_L32B_1P8
VREG_L33B_1P8
VREG_L34B_1P8
VREG_L35B_1P8
VREG_L36B_1P8
VREG_L37B_1P8
VREG_L38B_1P8
VREG_L39B_1P8
VREG_L40B_1P8
VREG_L41B_1P8
VREG_L42B_1P8
VREG_L43B_1P8
VREG_L44B_1P8
VREG_L45B_1P8
VREG_L46B_1P8
VREG_L47B_1P8
VREG_L48B_1P8
VREG_L49B_1P8
VREG_L50B_1P8