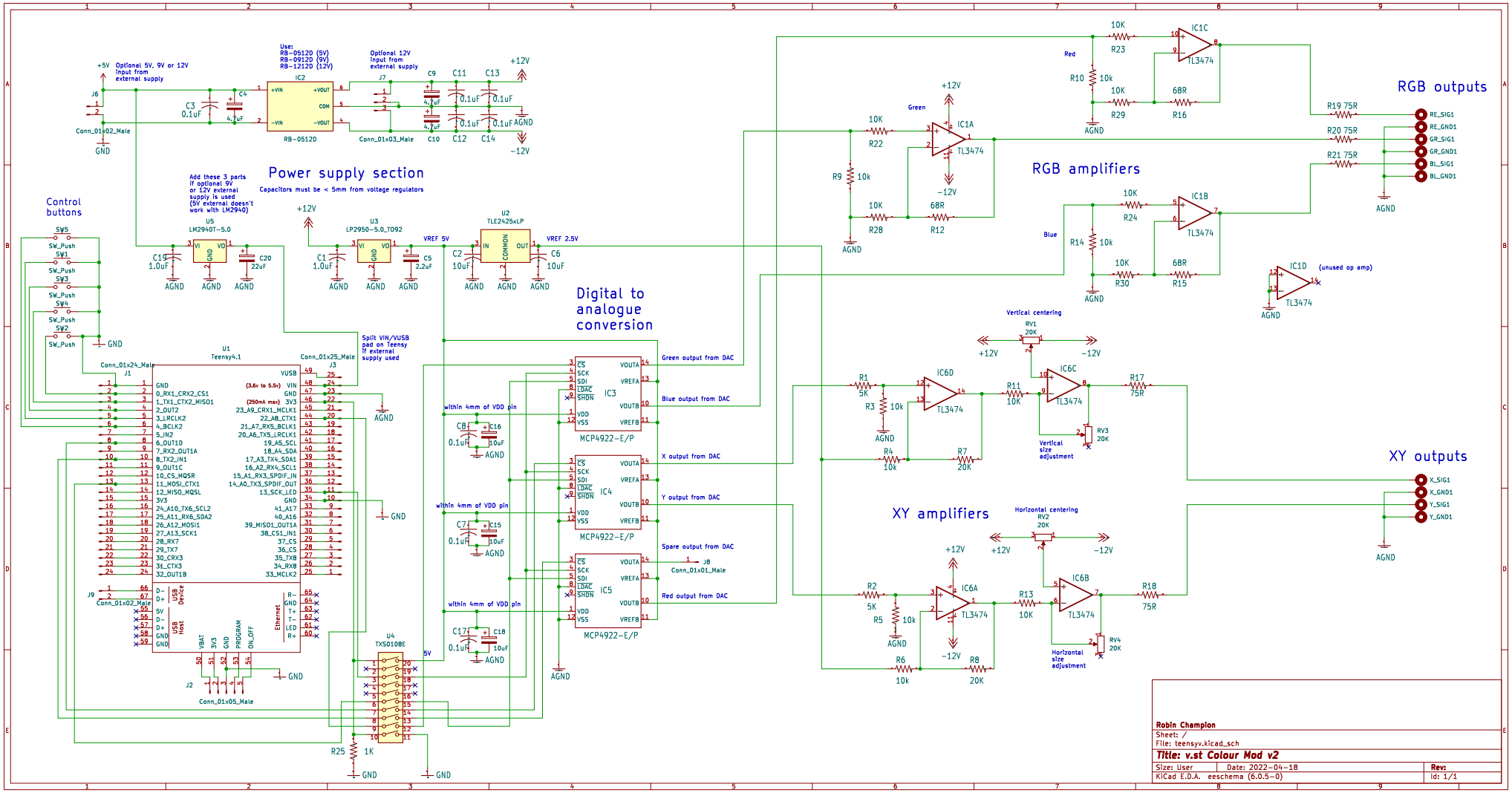
Power supply section
Capacitors must be < 5mm from voltage regulators
Control buttons
Digital to analogue conversion
RGB amplifiers
RGB outputs
XY amplifiers
XY outputs
Optional 5V, 9V or 12V input from external supply
Use: RB-0512D (5V) RB-0912D (9V) RB-1212D (12V)
Optional 12V input from external supply
Add these 3 parts if optional 9V or 12V external supply is used (5V external doesn't work with LM2940)
Spilt VIN/VUSB pad on Teensy if external supply used
VREF 5V
VREF 2.5V
within 4mm of VDD pin
Green output from DAC
Blue output from DAC
X output from DAC
Y output from DAC
Spare output from DAC
Red output from DAC
Vertical centering
Vertical size adjustment
Horizontal centering
Horizontal size adjustment
(unused op amp)
Robin Champion
Sheet: /
File: teensyv.kicad_sch
Title: v.st Colour Mod v2
Size: User
Date: 2022-04-18
Rev:
KiCad E.D.A. eeschema (6.0.5-0)
Id: 1/1