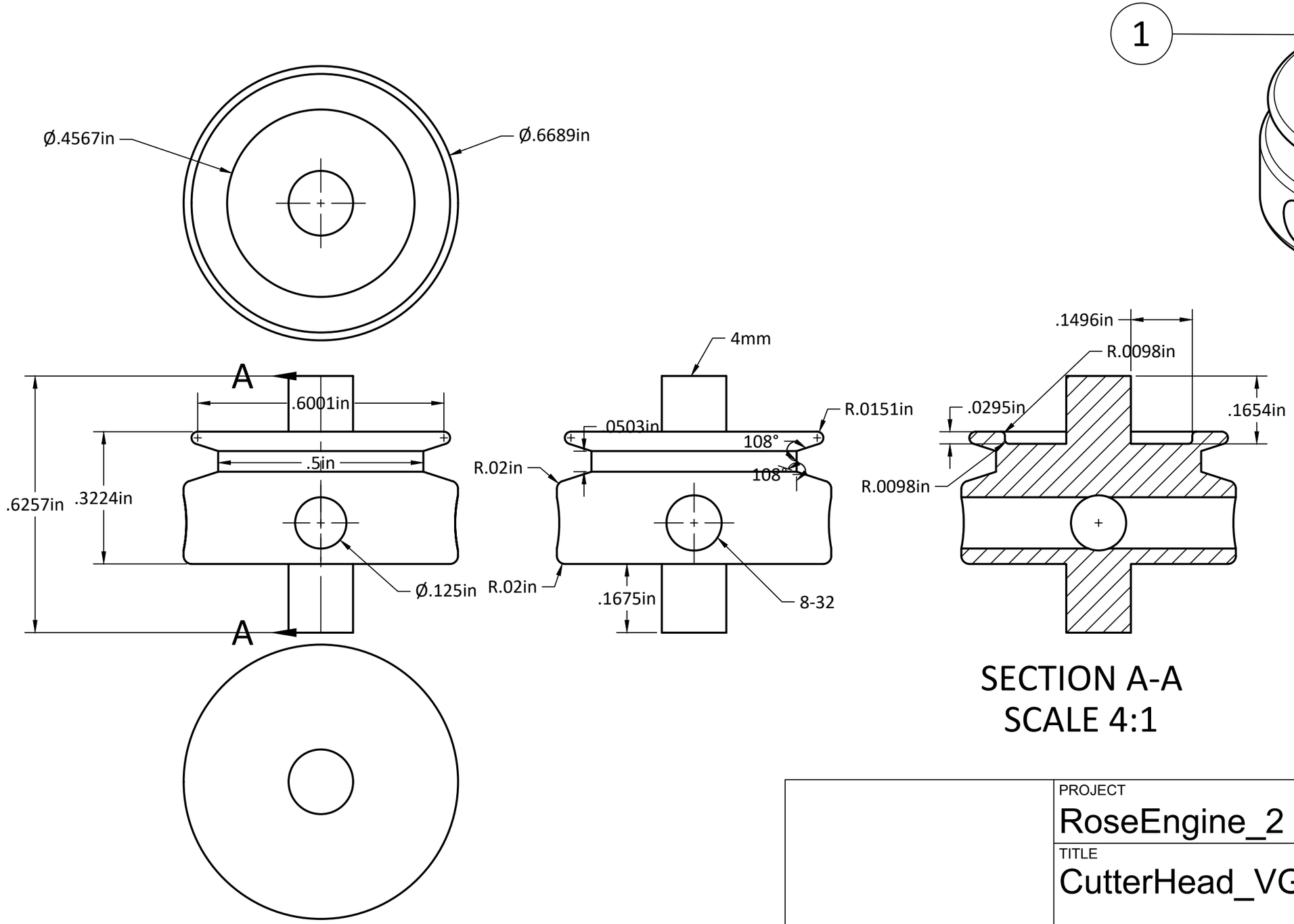

ITEM	QTY	PART NUMBER	DESCRIPTION	MATERIAL
1	1	CUTTERHEAD_VGROOVE	.125" CUTTERS MF104ZZ BEARINGS 2MM BELT	STEEL

PARTS LIST

PROJECT
RoseEngine_2

TITLE
CutterHead_VGrooveH

APPROVED	SIZE	CODE	DWG NO	REV
CHECKED	B			
DRAWN Ed French 9/15/2020	SCALE 4:1	WEIGHT	SHEET 1/1	