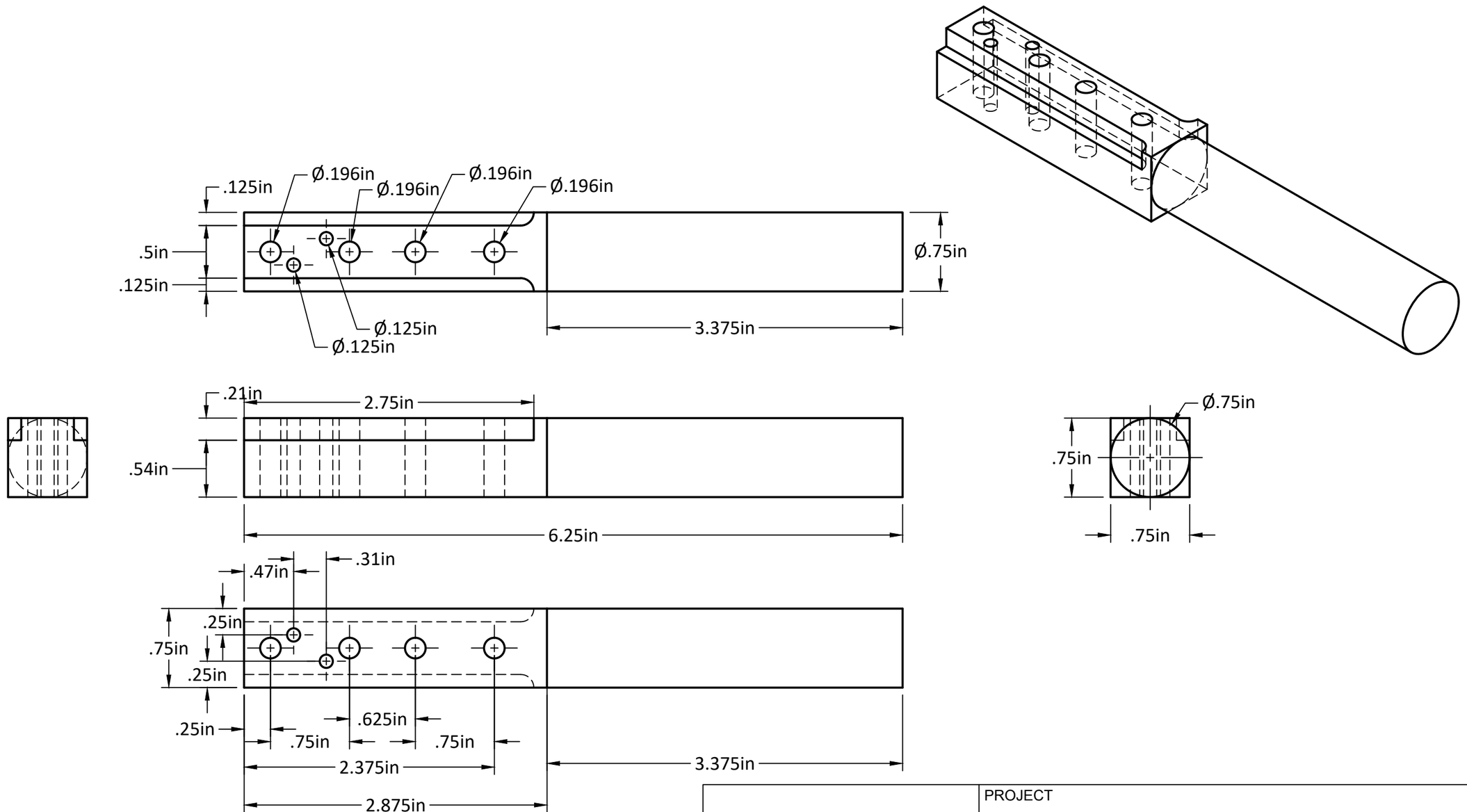

	PROJECT UCF-6mm-U			
	TITLE Main Arm			
APPROVED	SIZE	CODE	DWG NO	REV
CHECKED	B			
DRAWN Ed French 9/23/2021	SCALE 1:1	WEIGHT		SHEET 1/1