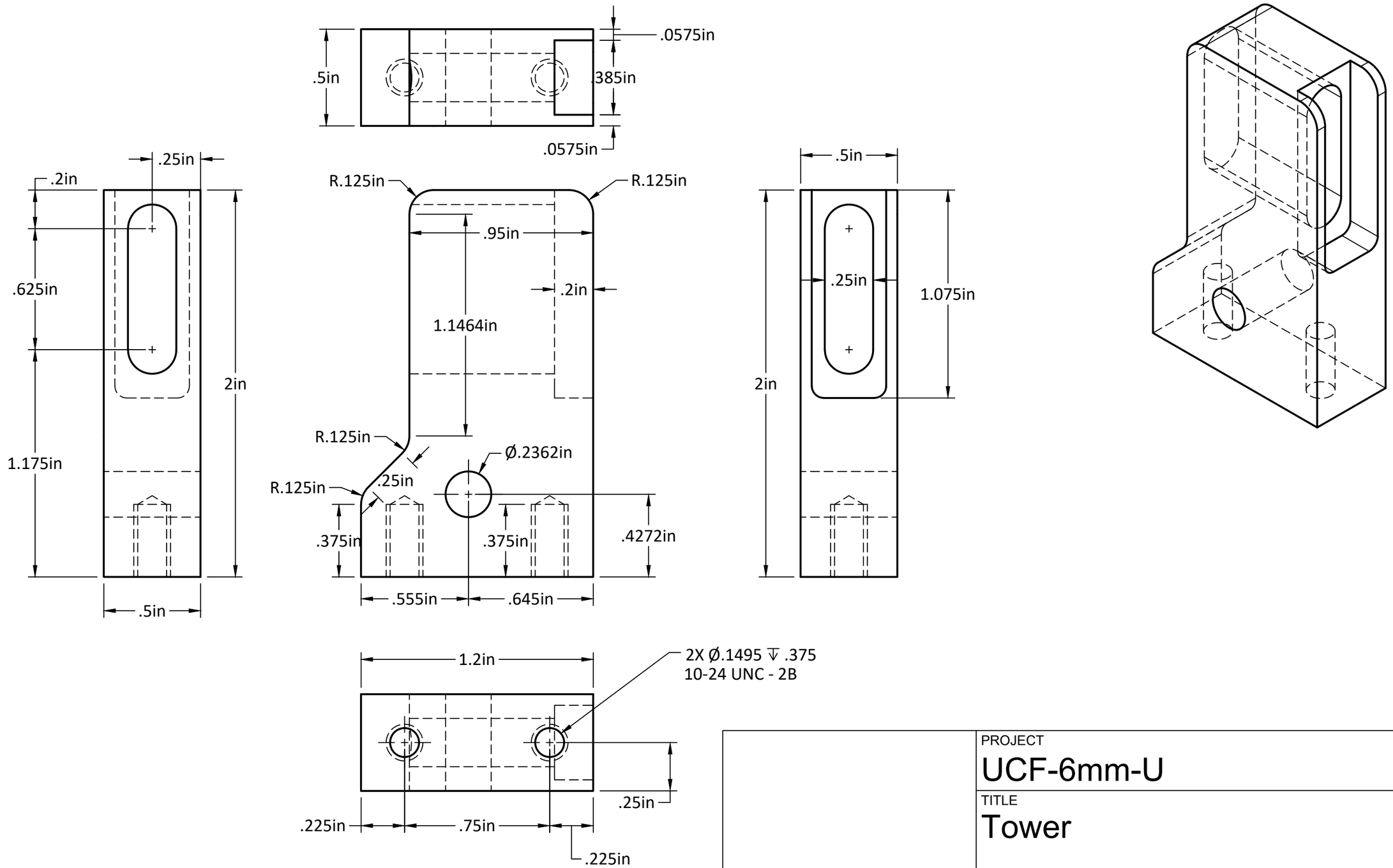

	PROJECT UCF-6mm-U				
	TITLE Tower				
APPROVED	SIZE	CODE	DWG NO		REV
CHECKED	B				
DRAWN Ed French 9/25/2021	SCALE 2:1		WEIGHT		SHEET 1/1