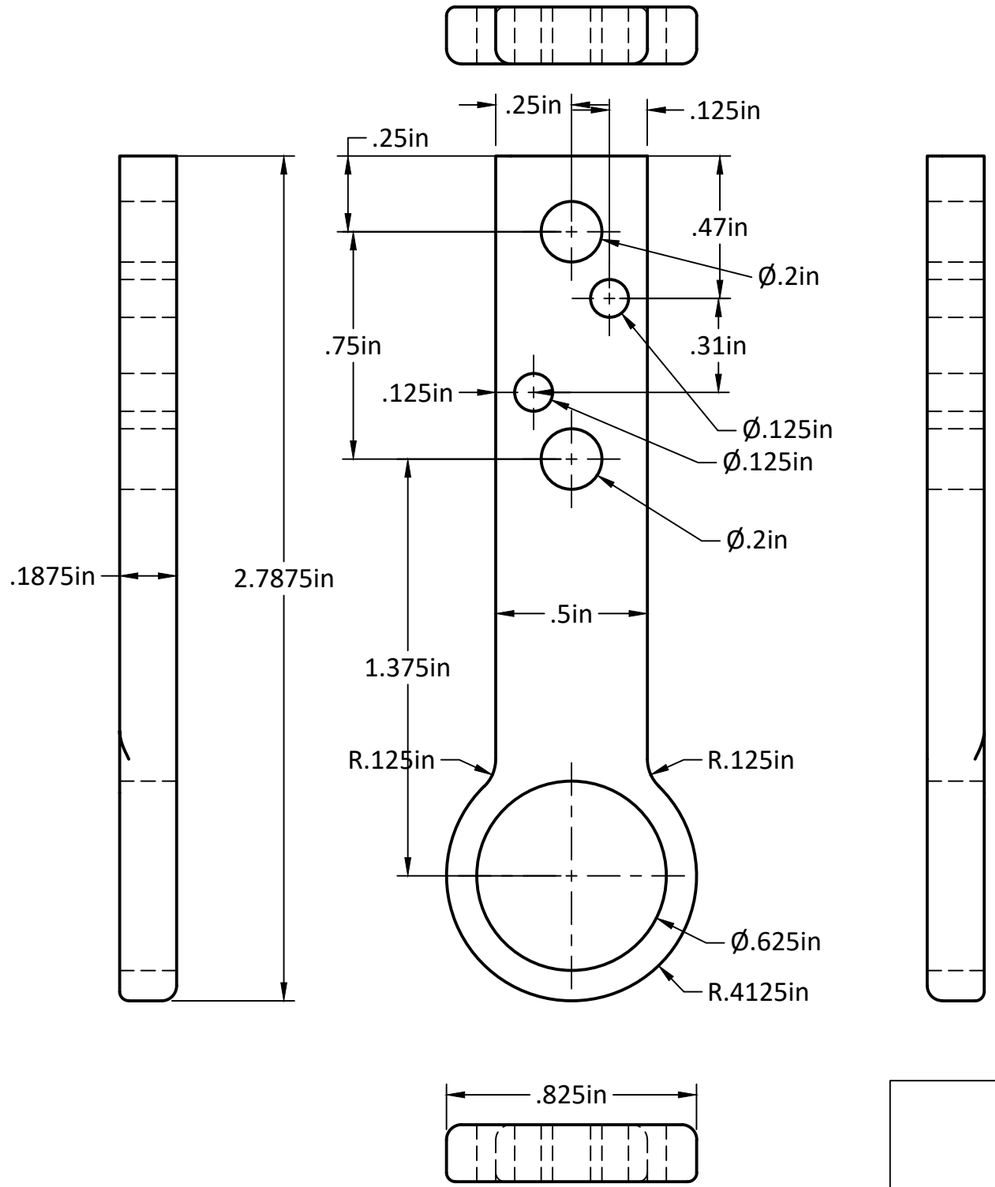

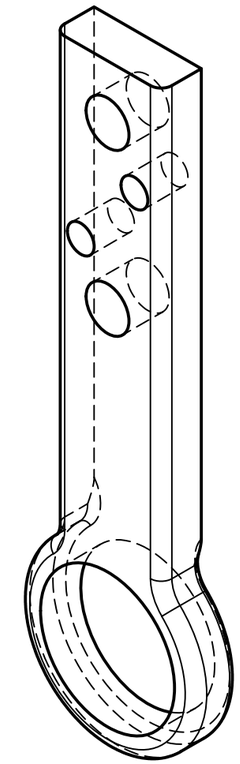

	PROJECT UCF-6mm-U			
	TITLE Lower Cutter Mount			
APPROVED	SIZE	CODE	DWG NO	REV
CHECKED	B			
DRAWN Ed French 9/24/2021	SCALE 2:1	WEIGHT	SHEET 1/1	