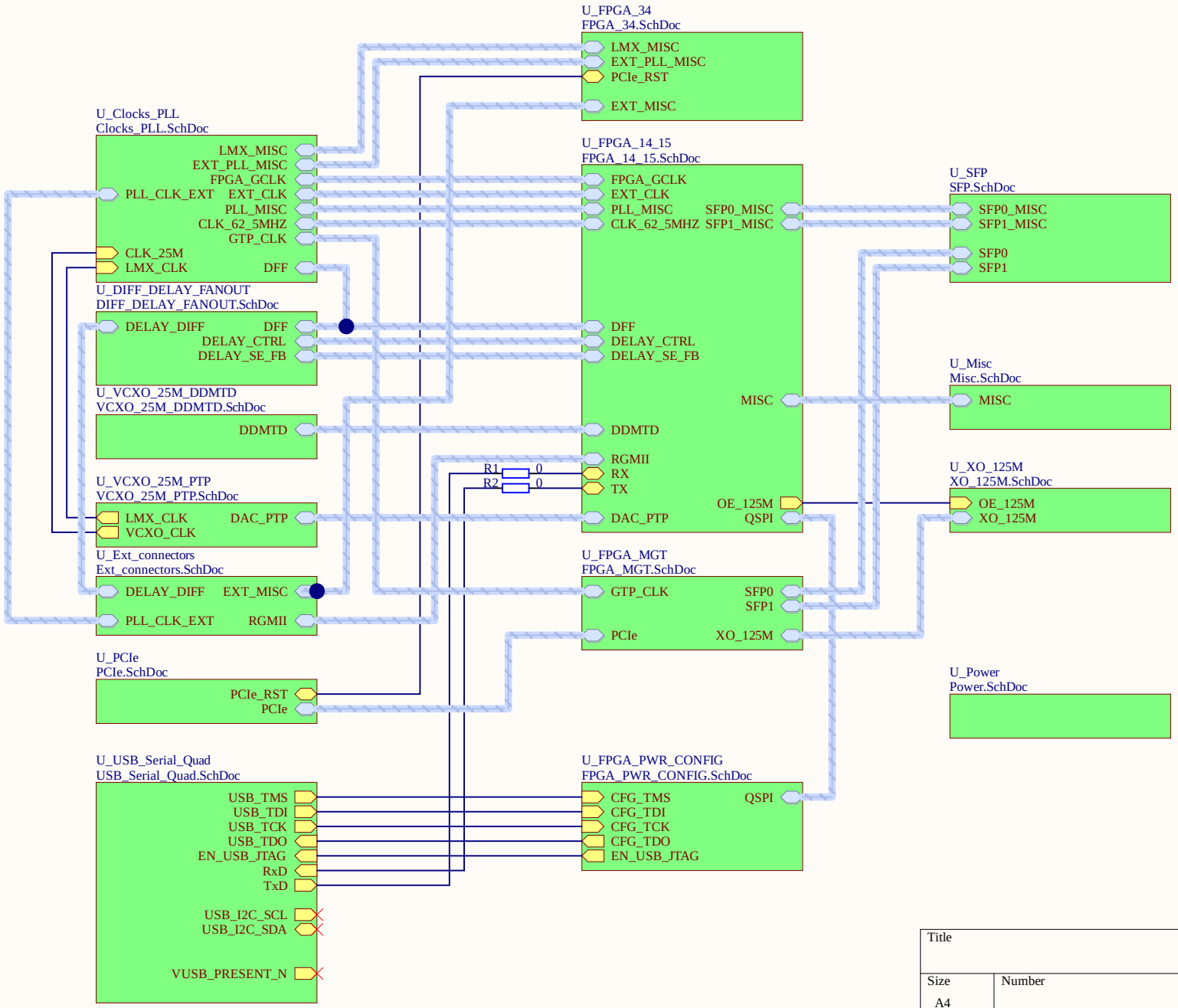

Title		
Size A4	Number	Revision
Date: 5.15.2024		Sheet of
File: C:\Users\..\SPEC-A7-TOP.SchDoc		Drawn By:

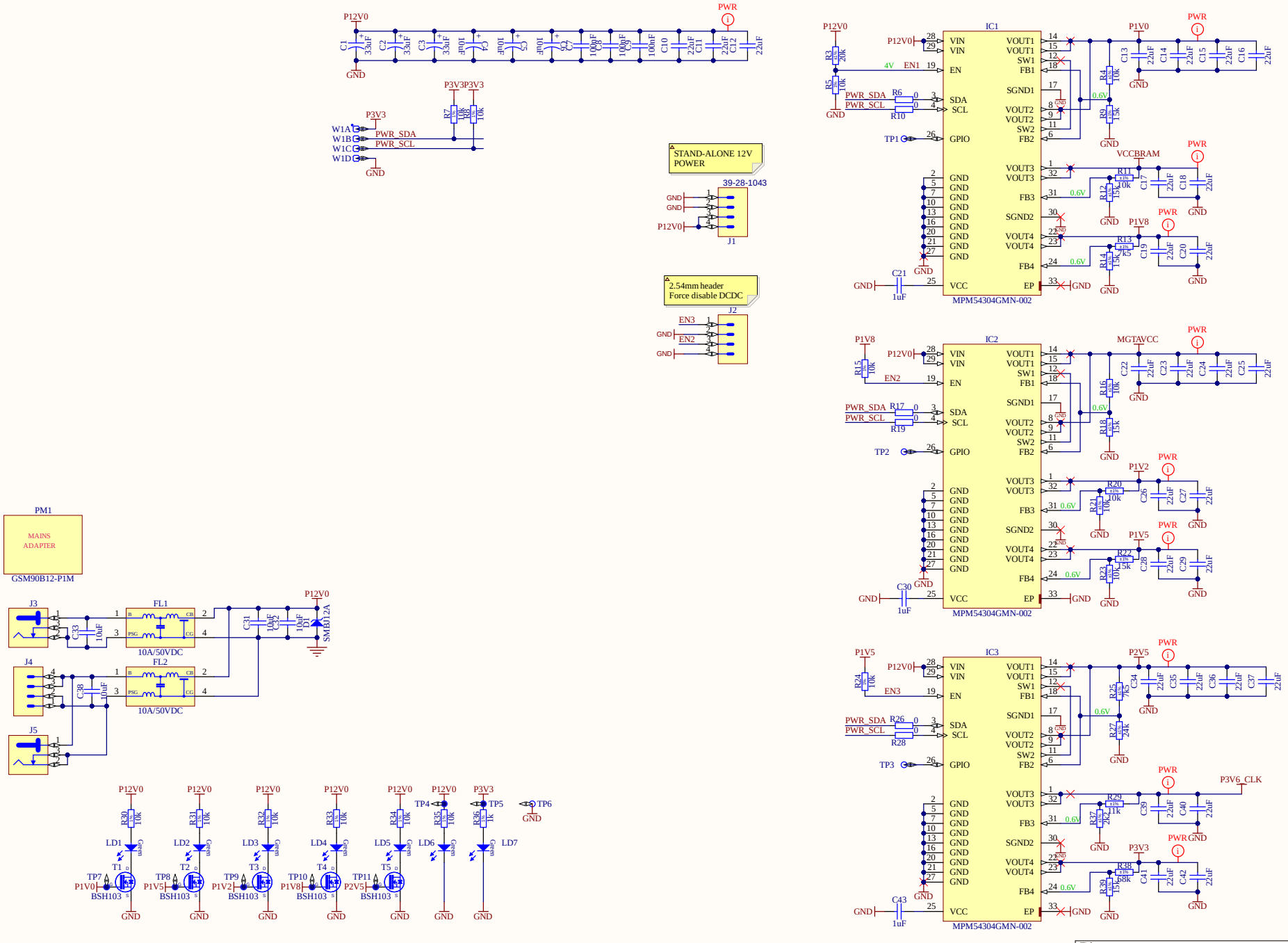

Title		
Size A3	Number	Revision
Date: 5.15.2024		Sheet of
File: C:\Users\..\Power.SchDoc		Drawn By:

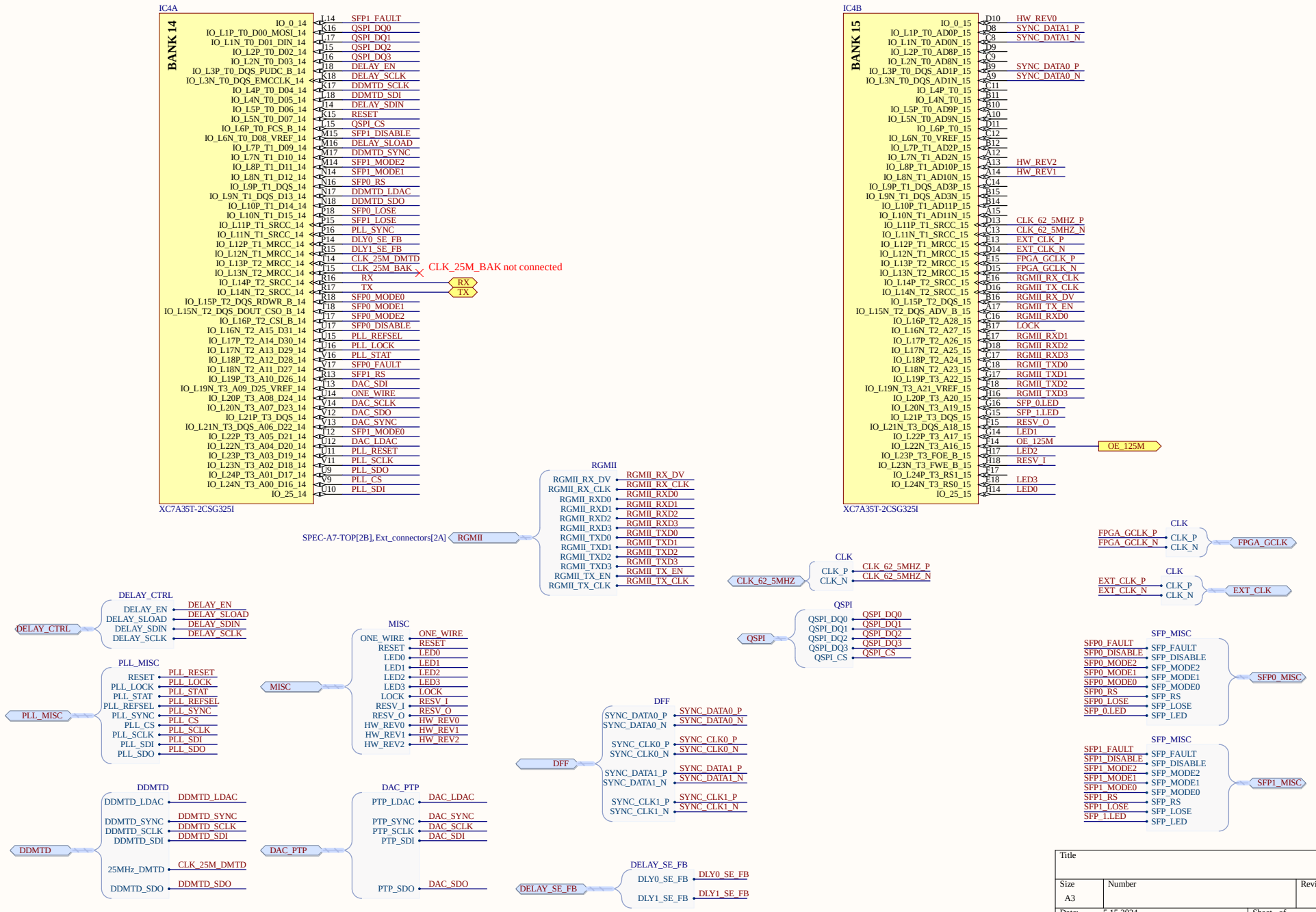

Title		
Size A3	Number	Revision
Date: 5.15.2024		Sheet of
File: C:\Users\..\FPGA_14_15.SchDoc		Drawn By:

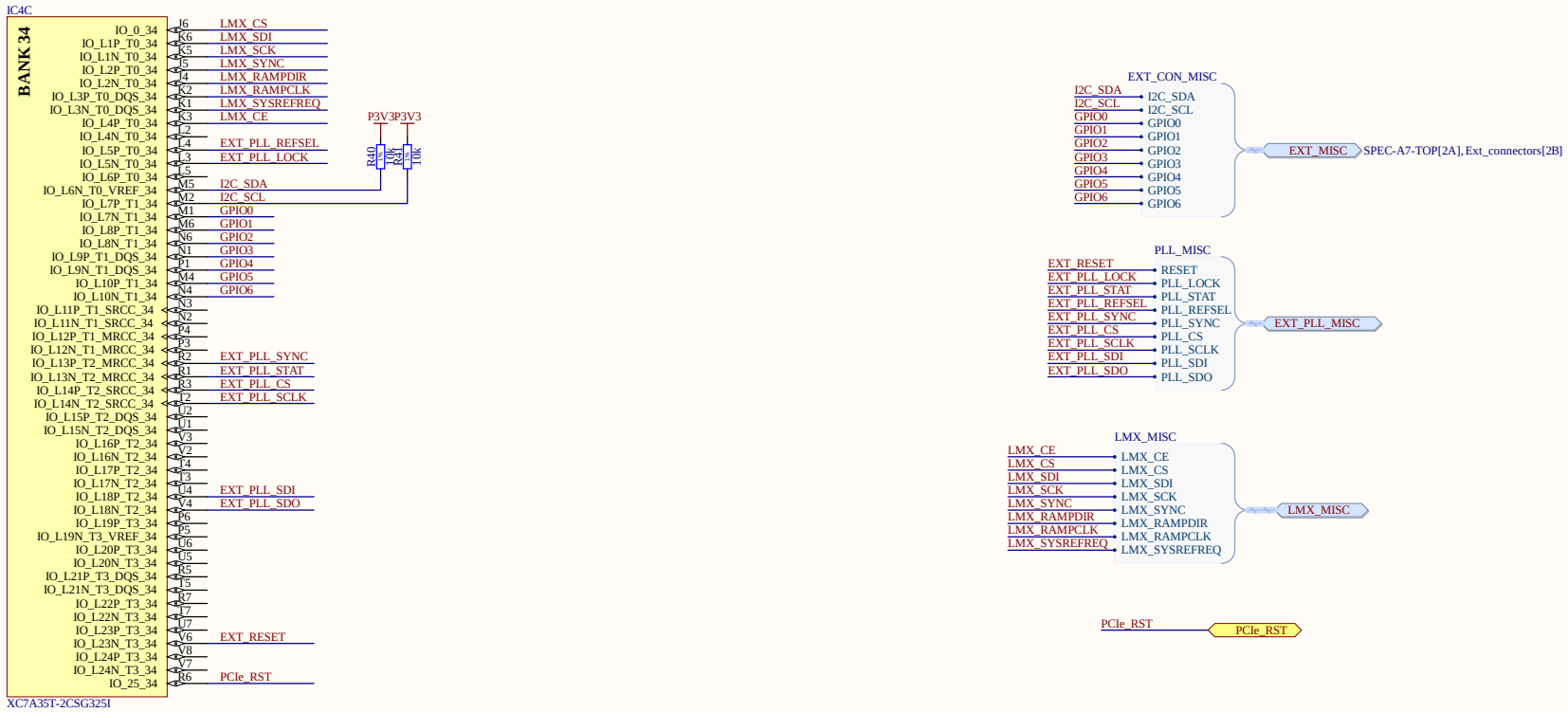

Title		
Size A3	Number	Revision
Date: 5.15.2024		Sheet of
File: C:\Users\..\FPGA_34.SchDoc		Drawn By:

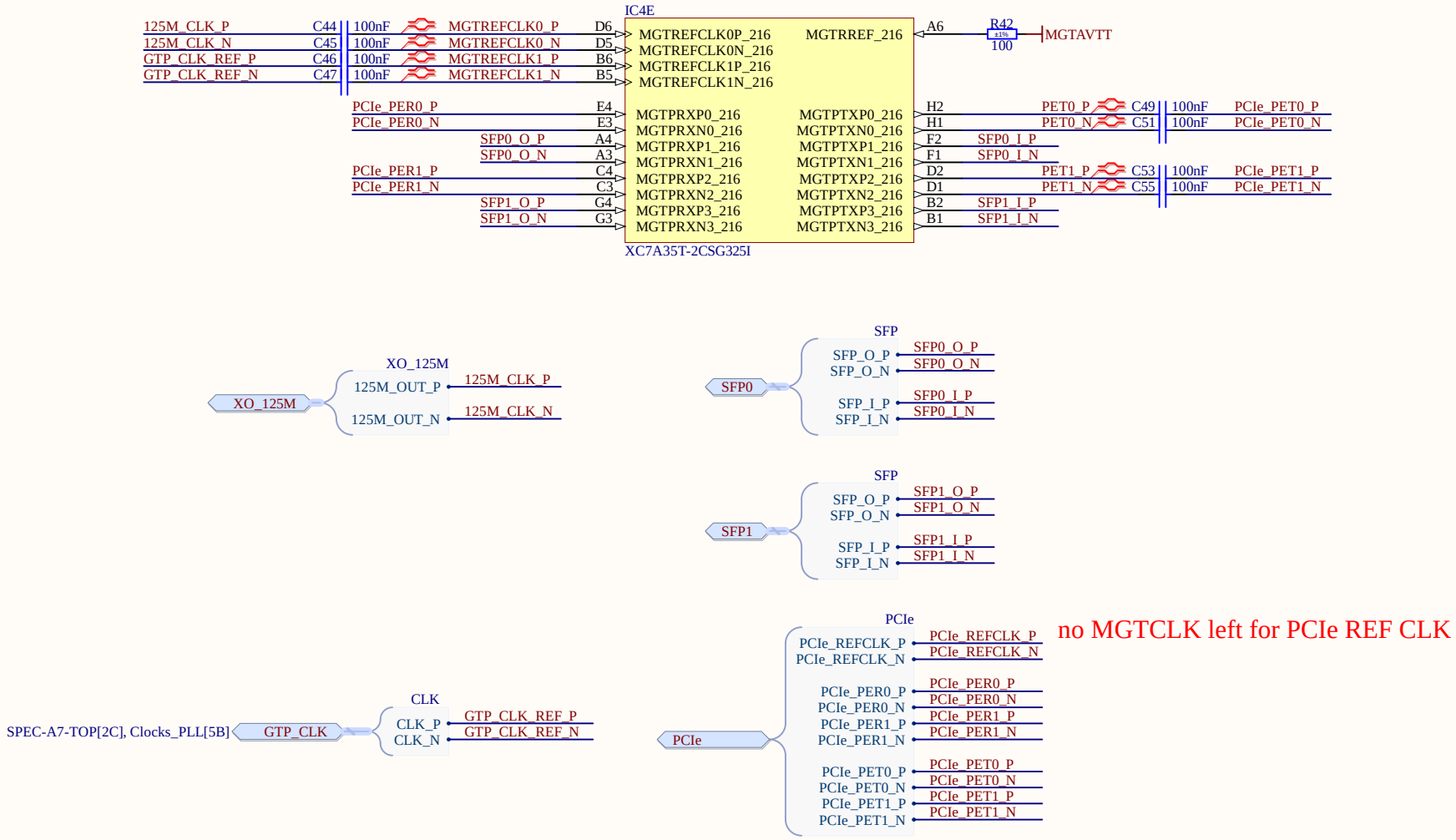

Title		
Size A4	Number	Revision
Date: 5.15.2024		Sheet of
File: C:\Users\..\FPGA_MGT.SchDoc		Drawn By:

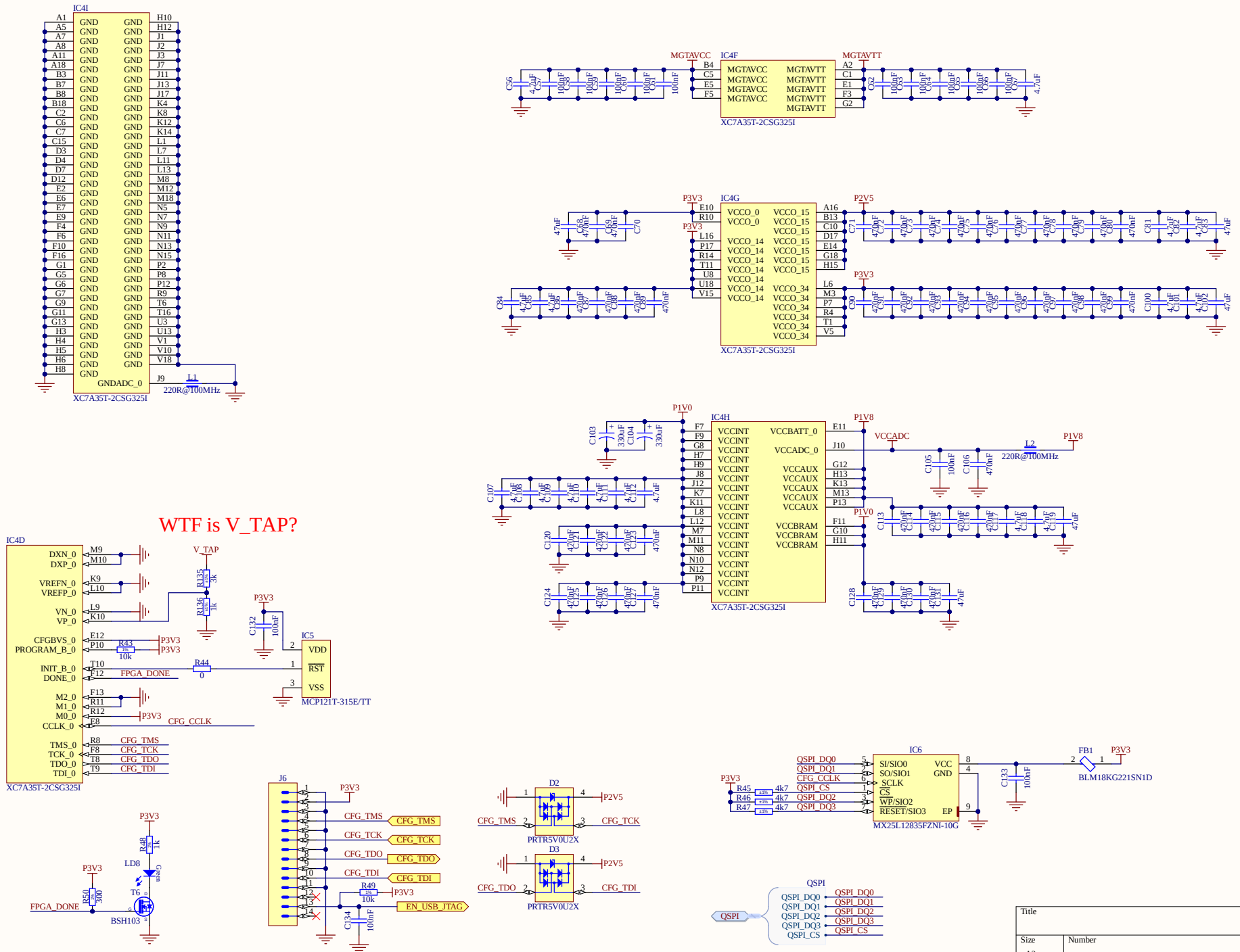
IC4I
XC7A35T-2CSG325I
GND
GNDADC_0
J9
L1
220R@100MHz
MGTAVCC
MGTAVTT
IC4F
XC7A35T-2CSG325I
P3V3
P2V5
IC4G
XC7A35T-2CSG325I
P1V0
P1V8
IC4H
XC7A35T-2CSG325I
VCCADC
L2
220R@100MHz
WTF is V_TAP?
IC4D
XC7A35T-2CSG325I
V_TAP
R35
3k
R36
1k
C132
100nF
IC5
MCP121T-315E/TT
VDD
RST
VSS
R43
10k
R44
0
FPGA_DONE
CFG_CCLK
CFG_TMS
CFG_TCK
CFG_TDO
CFG_TDI
J6
R48
1k
LD8
Green
T6
BSH103
R50
300
R49
10k
C134
100nF
EN_USB_JTAG
D2
PRTR5V0U2X
D3
PRTR5V0U2X
IC6
MX25L12835FZNI-10G
QSPI_DQ0
QSPI_DQ1
QSPI_DQ2
QSPI_DQ3
QSPI_CS
QSPI
FB1
BLM18KG221SN1D
C133
100nF
Title
Size
A3
Number
Revision
Date:
5.15.2024
Sheet of
File:
C:\Users\..\FPGA_PWR_CONFIG.SchDoc
Drawn By:

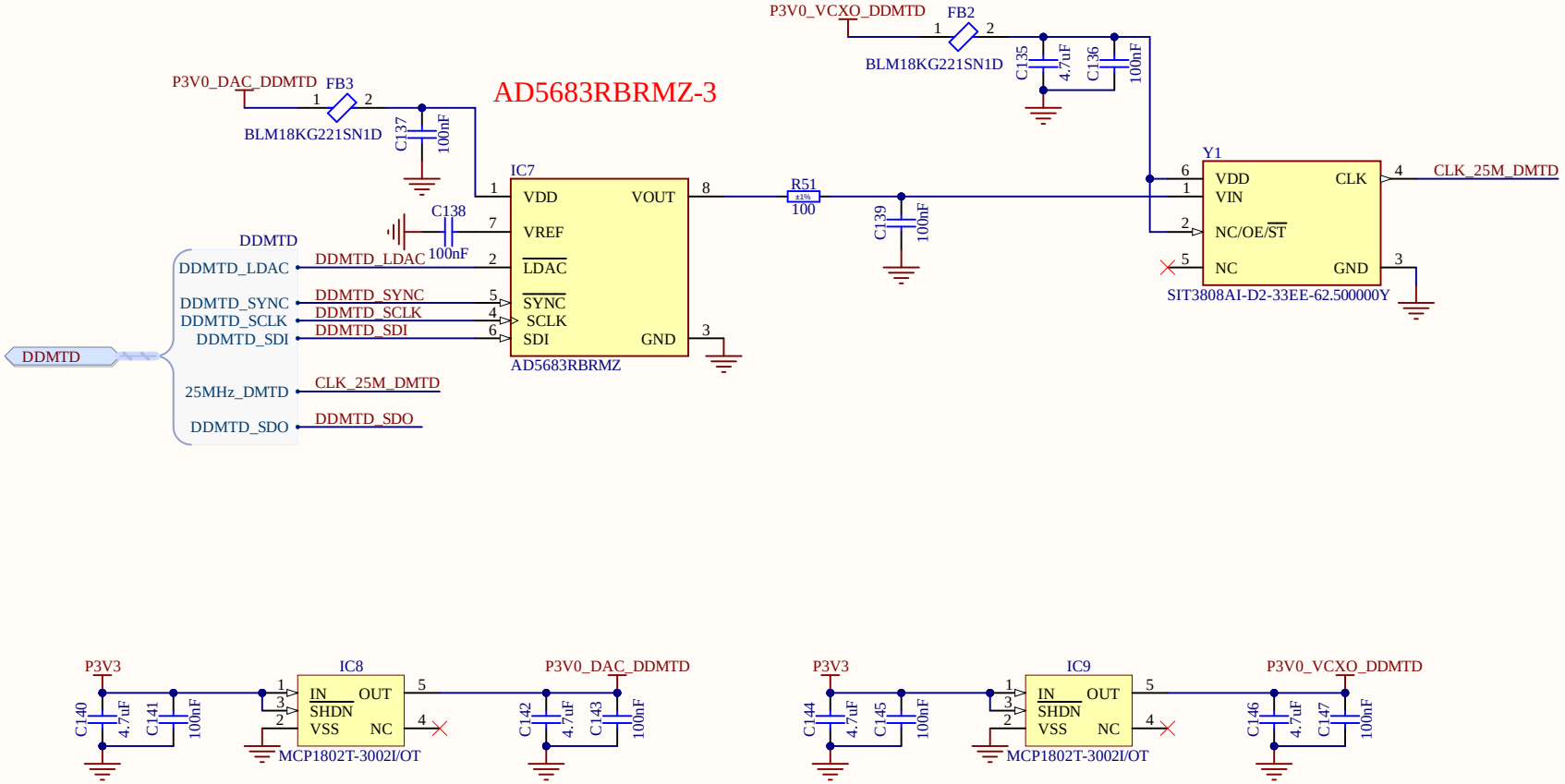

Title		
Size A4	Number	Revision
Date: 5.15.2024	Sheet of	
File: C:\Users\..\VCXO_25M_DDMTD.SchDoc	Drawn By:	

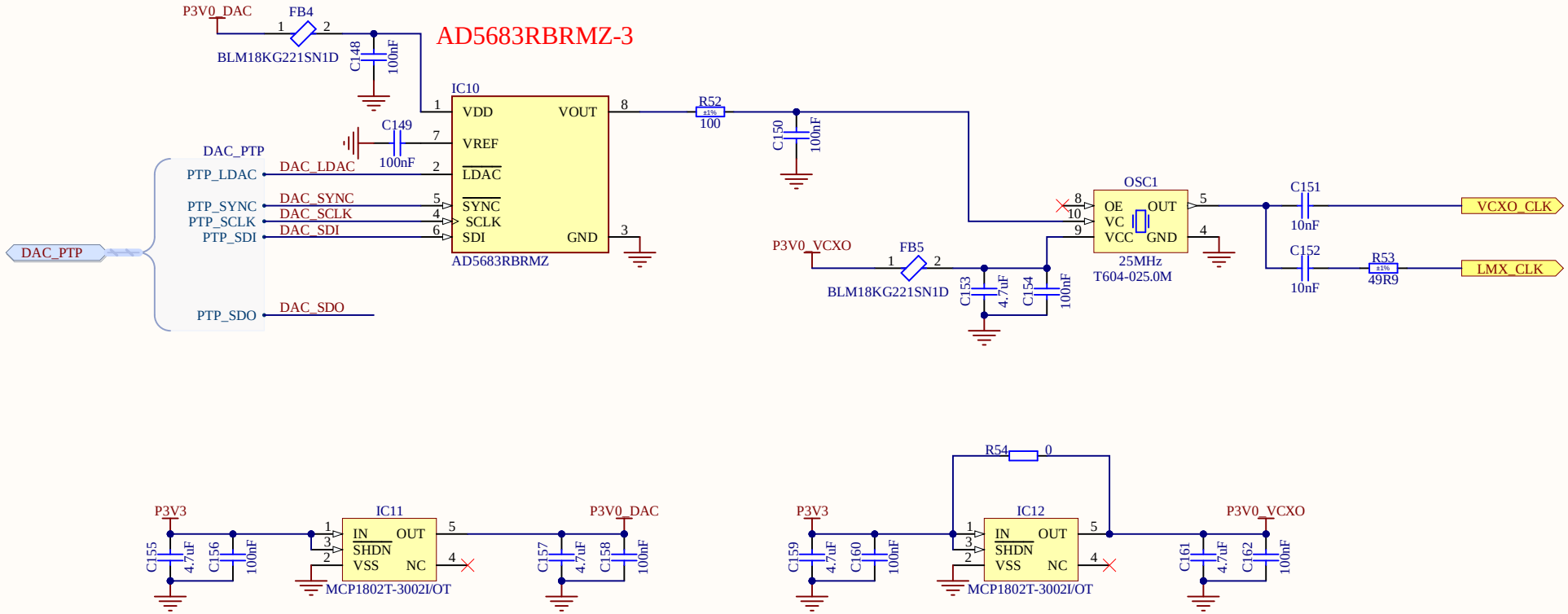

Title		
Size A4	Number	Revision
Date: 5.15.2024		Sheet of
File: C:\Users\..\VCXO_25M_PTP.SchDoc		Drawn By:

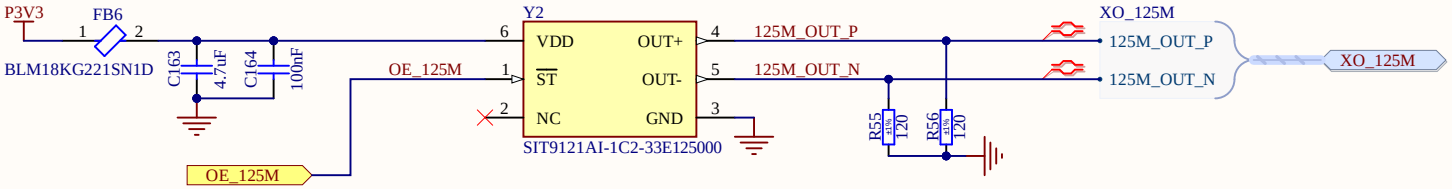

Title		
Size A4	Number	Revision
Date: 5.15.2024		Sheet of
File: C:\Users\..\XO_125M.SchDoc		Drawn By:

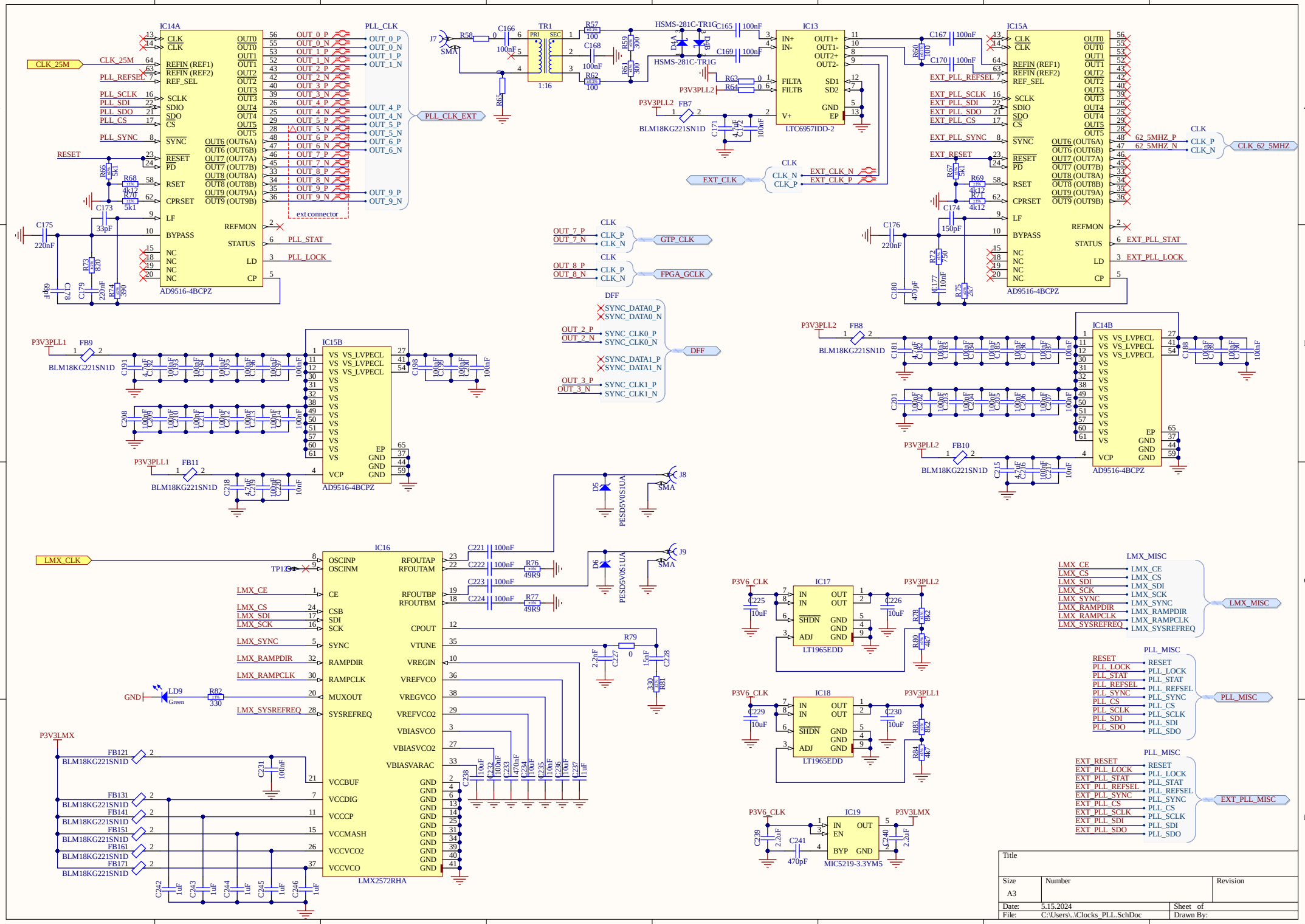
IC14A
AD9516-4BCPZ
CLK_25M
PLL_CLK
PLL_CLK_EXT
ext connector
J7
SMA
R58
C166
TR1
1:16
R57
R62
R59
R61
C168
HSMS-281C-TR1G
C165
C169
IC13
LTC6957IDD-2
P3V3PLL2
FB7
BLM18KG221SN1D
EXT_CLK
CLK_62_5MHZ
IC15A
EXT_PLL_STAT
EXT_PLL_LOCK
GTP_CLK
FPGA_GCLK
DFF
IC15B
IC14B
P3V3PLL1
FB9
FB11
FB8
FB10
J8
J9
D5
D6
PESD5V0S1UA
LMX_CLK
IC16
LMX2572RHA
LD9
Green
P3V3LMX
IC17
IC18
IC19
LT1965EDD
MIC5219-3.3YM5
P3V6_CLK
LMX_MISC
PLL_MISC
EXT_PLL_MISC
Title
Size
A3
Number
Revision
Date: 5.15.2024
File: C:\Users\..\Clocks_PLL.SchDoc
Sheet of
Drawn By:

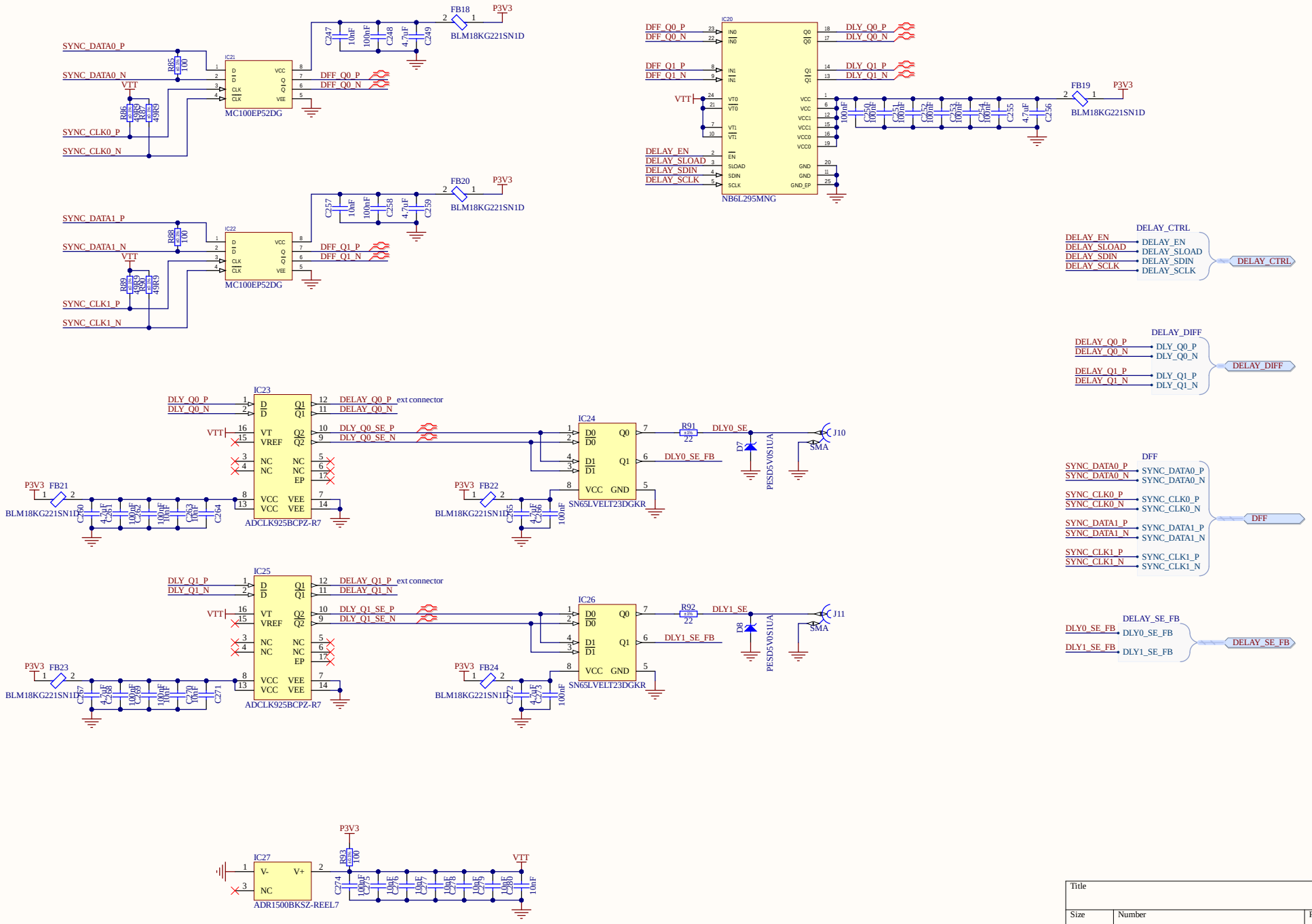
SYNC_DATA0_P
SYNC_DATA0_N
VTT
SYNC_CLK0_P
SYNC_CLK0_N
R85 100
R86 49R9
R87 49R9
IC21
MC100EP52DG
D D CLK CLK VCC Q Q VEE
DFF_Q0_P
DFF_Q0_N
C247 10nF
C248 100nF
C249 4.7uF
FB18 BLM18KG221SN1D
P3V3
SYNC_DATA1_P
SYNC_DATA1_N
SYNC_CLK1_P
SYNC_CLK1_N
R88 100
R89 49R9
R90 49R9
IC22
MC100EP52DG
DFF_Q1_P
DFF_Q1_N
C257 10nF
C258 100nF
C259 4.7uF
FB20 BLM18KG221SN1D
IC20
NB6L295MNG
IN0 IN0 IN1 IN1 VT0 VT0 VT1 VT1 EN SLOAD SDIN SCLK VCC VCC VCC1 VCC1 VCC0 VCC0 GND GND GND_EP Q0 Q0 Q1 Q1
DFF_Q0_P
DFF_Q0_N
DFF_Q1_P
DFF_Q1_N
DELAY_EN
DELAY_SLOAD
DELAY_SDIN
DELAY_SCLK
DLY_Q0_P
DLY_Q0_N
DLY_Q1_P
DLY_Q1_N
C250 100nF
C251 100nF
C252 100nF
C253 100nF
C254 100nF
C255 4.7uF
C256
FB19 BLM18KG221SN1D
DELAY_CTRL
DELAY_DIFF
DFF
DELAY_SE_FB
IC23
ADCLK925BCPZ-R7
DLY_Q0_P
DLY_Q0_N
DELAY_Q0_P ext connector
DELAY_Q0_N
DLY_Q0_SE_P
DLY_Q0_SE_N
VT VREF NC NC EP VCC VCC VEE VEE
FB21 BLM18KG221SN1D
C260 4.7uF
C261
C262 100nF
C263 10nF
C264
IC24
SN65LVELT23DGKR
D0 D0 D1 D1 VCC GND Q0 Q1
R91 22
DLY0_SE
DLY0_SE_FB
D7 PESD5V0S1UA
J10 SMA
FB22 BLM18KG221SN1D
C265 4.7uF
C266 100nF
IC25
ADCLK925BCPZ-R7
DLY_Q1_P
DLY_Q1_N
DELAY_Q1_P ext connector
DELAY_Q1_N
DLY_Q1_SE_P
DLY_Q1_SE_N
FB23 BLM18KG221SN1D
C267 4.7uF
C268
C269 100nF
C270 10nF
C271
IC26
SN65LVELT23DGKR
R92 22
DLY1_SE
DLY1_SE_FB
D8 PESD5V0S1UA
J11 SMA
FB24 BLM18KG221SN1D
C272 4.7uF
C273 100nF
IC27
ADR1500BKSZ-REEL7
V- V+ NC
R93 100
C274 100nF
C275 10nF
C276
C277 10nF
C278
C279 10nF
C280 10nF
Title
Size A3
Number
Revision
Date: 5.15.2024
Sheet of
File: C:\Users\..\DIFF_DELAY_FANOUT.SchDoc
Drawn By:

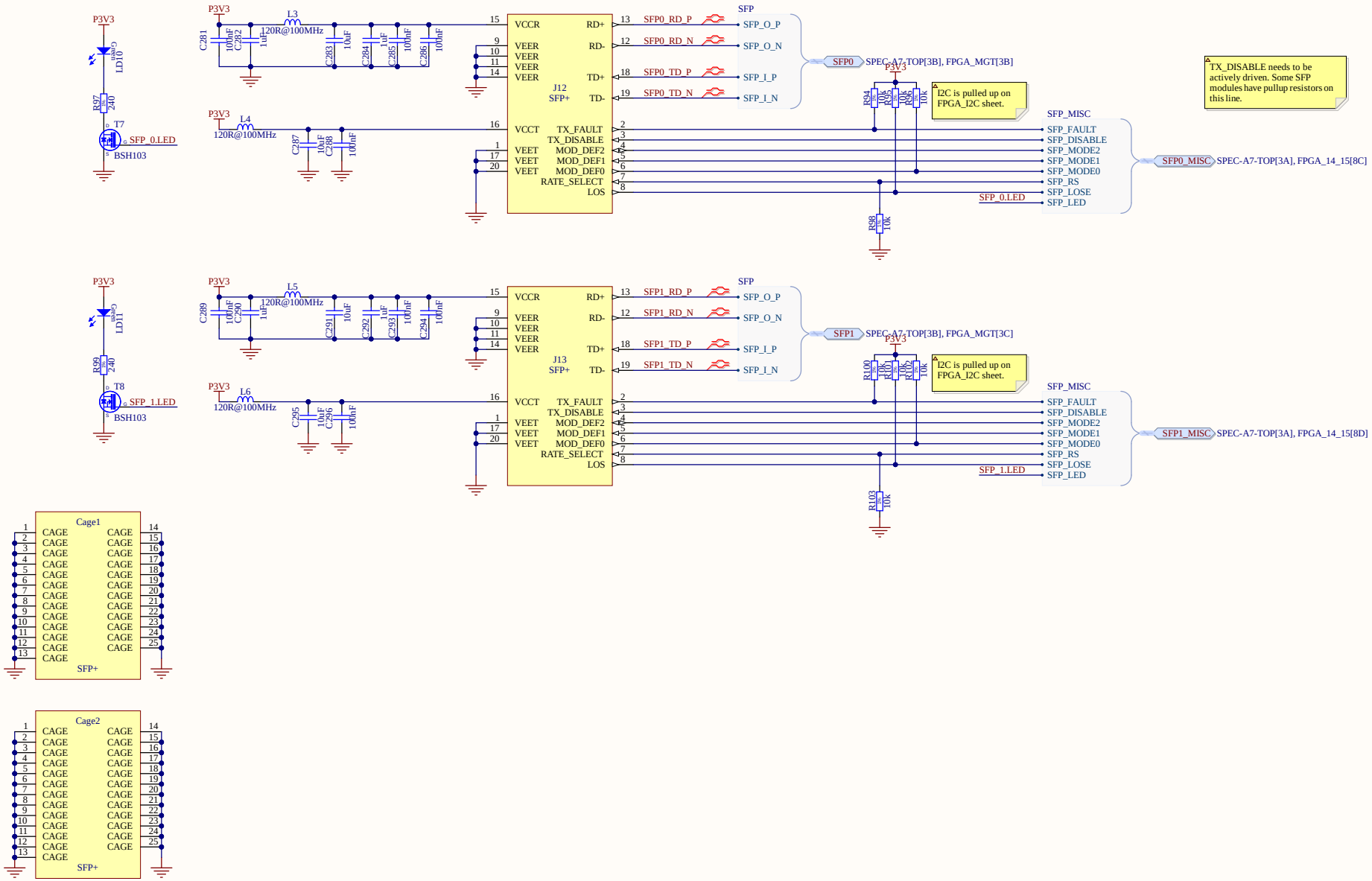

Title		
Size A3	Number	Revision
Date: 5.15.2024		Sheet of
File: C:\Users\..\SFP.SchDoc		Drawn By:

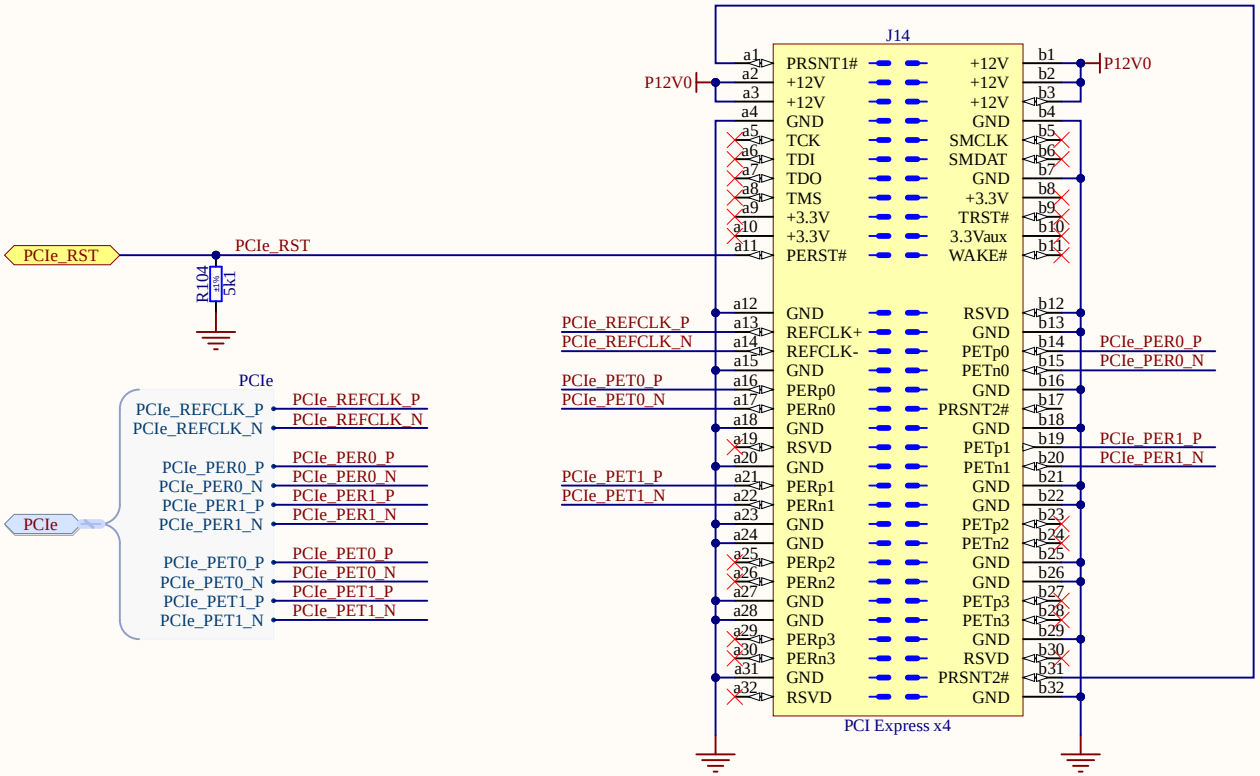

Title		
Size A4	Number	Revision
Date: 5.15.2024		Sheet of
File: C:\Users\..\PCIe.SchDoc		Drawn By:

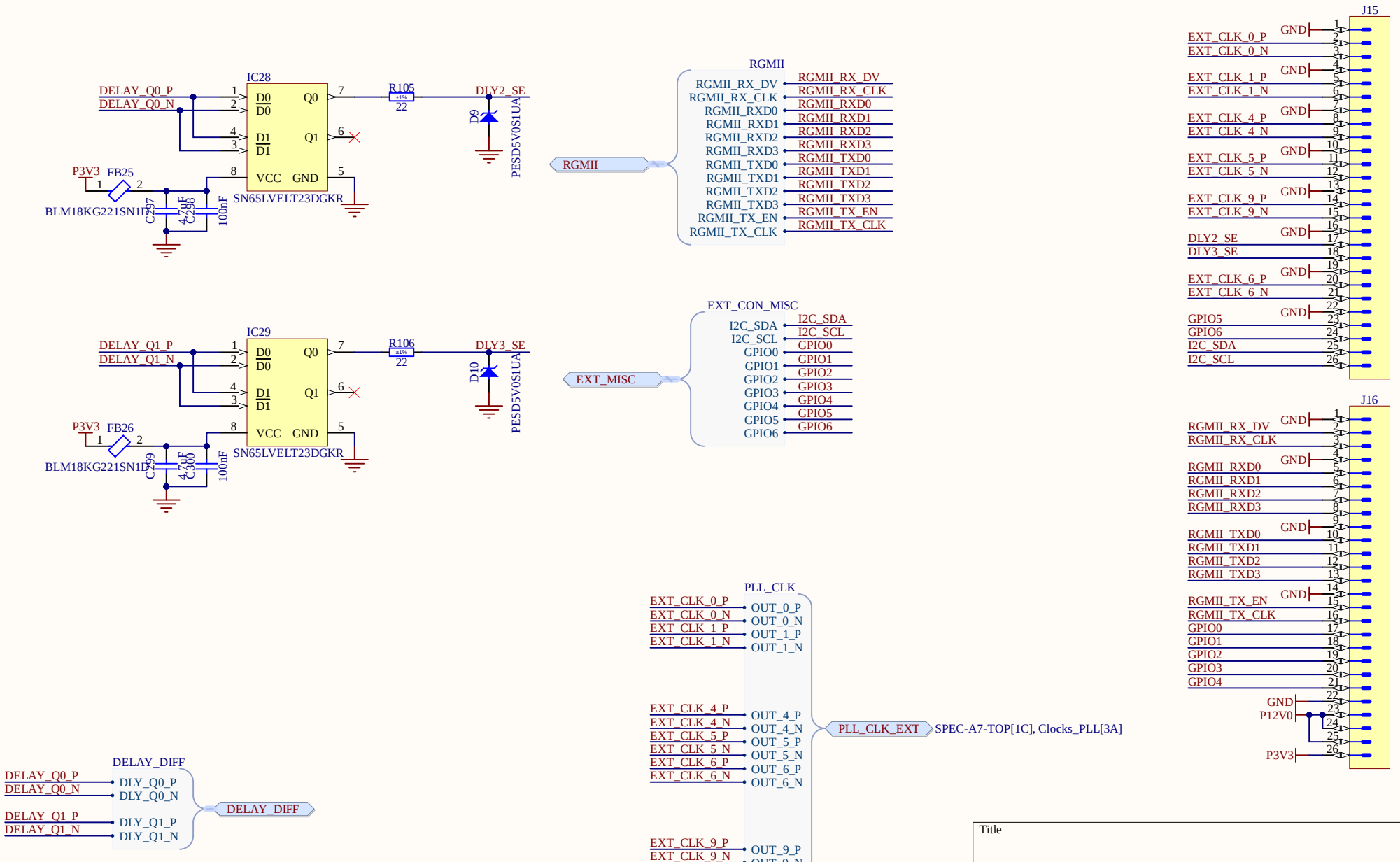
IC28
DELAY_Q0_P
DELAY_Q0_N
D0
D0
D1
D1
Q0
Q1
VCC
GND
SN65LVELT23DGKR
R105
22
DLY2_SE
D9
PESD5V0S1UA
P3V3
FB25
BLM18KG221SN1D
C297
4.7uF
C298
100nF
IC29
DELAY_Q1_P
DELAY_Q1_N
R106
22
DLY3_SE
D10
PESD5V0S1UA
P3V3
FB26
BLM18KG221SN1D
C299
4.7uF
C300
100nF
SN65LVELT23DGKR
RGMII
RGMII_RX_DV
RGMII_RX_CLK
RGMII_RXD0
RGMII_RXD1
RGMII_RXD2
RGMII_RXD3
RGMII_TXD0
RGMII_TXD1
RGMII_TXD2
RGMII_TXD3
RGMII_TX_EN
RGMII_TX_CLK
EXT_CON_MISC
I2C_SDA
I2C_SCL
GPIO0
GPIO1
GPIO2
GPIO3
GPIO4
GPIO5
GPIO6
EXT_MISC
J15
EXT_CLK_0_P
EXT_CLK_0_N
EXT_CLK_1_P
EXT_CLK_1_N
EXT_CLK_4_P
EXT_CLK_4_N
EXT_CLK_5_P
EXT_CLK_5_N
EXT_CLK_9_P
EXT_CLK_9_N
DLY2_SE
DLY3_SE
EXT_CLK_6_P
EXT_CLK_6_N
GPIO5
GPIO6
I2C_SDA
I2C_SCL
GND
J16
RGMII_RX_DV
RGMII_RX_CLK
RGMII_RXD0
RGMII_RXD1
RGMII_RXD2
RGMII_RXD3
RGMII_TXD0
RGMII_TXD1
RGMII_TXD2
RGMII_TXD3
RGMII_TX_EN
RGMII_TX_CLK
GPIO0
GPIO1
GPIO2
GPIO3
GPIO4
GND
P12V0
P3V3
PLL_CLK
OUT_0_P
OUT_0_N
OUT_1_P
OUT_1_N
OUT_4_P
OUT_4_N
OUT_5_P
OUT_5_N
OUT_6_P
OUT_6_N
OUT_9_P
OUT_9_N
PLL_CLK_EXT
SPEC-A7-TOP[1C], Clocks_PLL[3A]
DELAY_DIFF
DLY_Q0_P
DLY_Q0_N
DLY_Q1_P
DLY_Q1_N
Title
Size
A4
Number
Revision
Date: 5.15.2024
Sheet of
File: C:\Users\..\Ext_connectors.SchDoc
Drawn By:

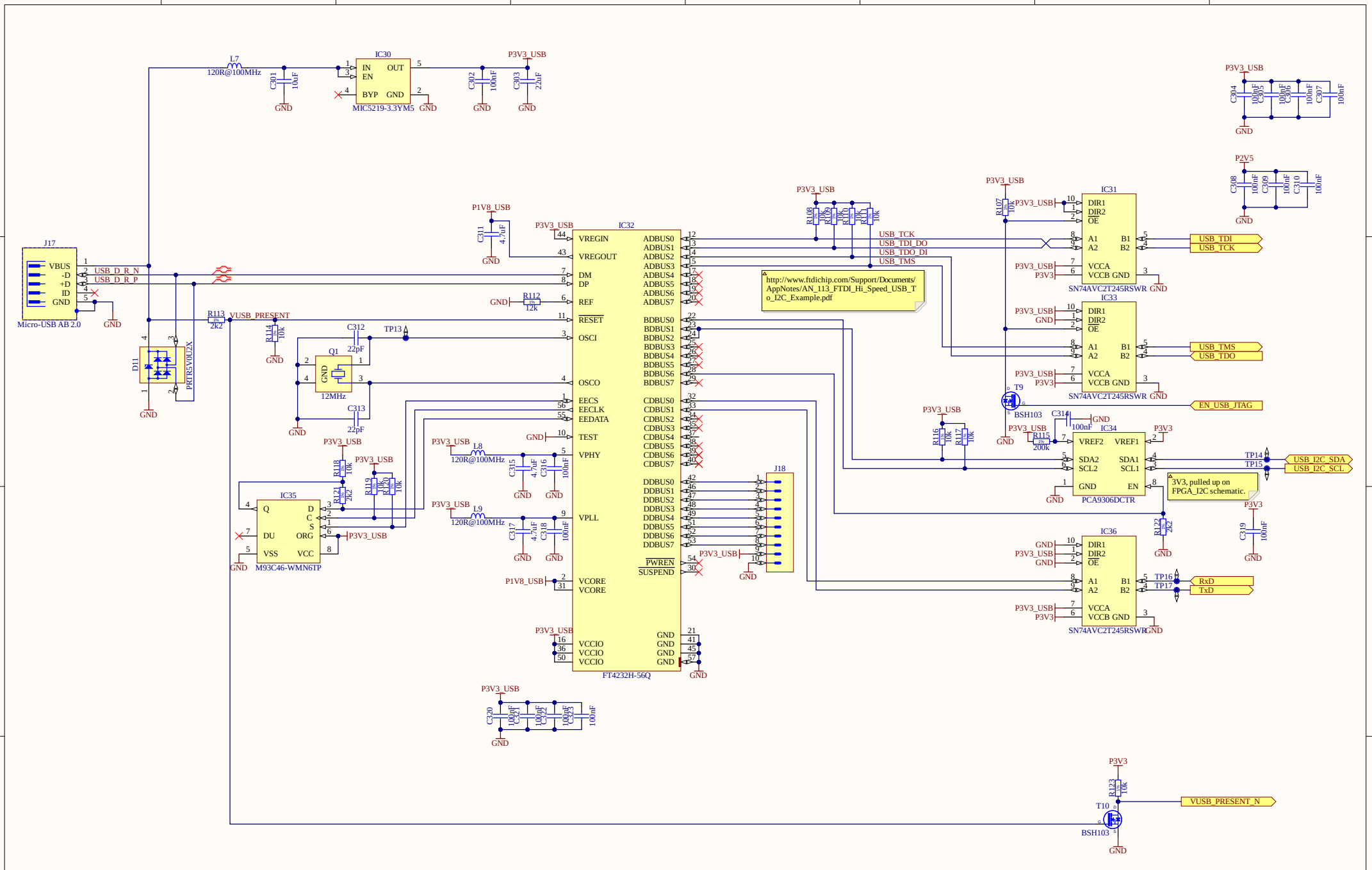

Title		
Size A3	Number	Revision
Date: 5.15.2024		Sheet of
File: C:\Users\..\USB_Serial_Quad.SchDoc		Drawn By:

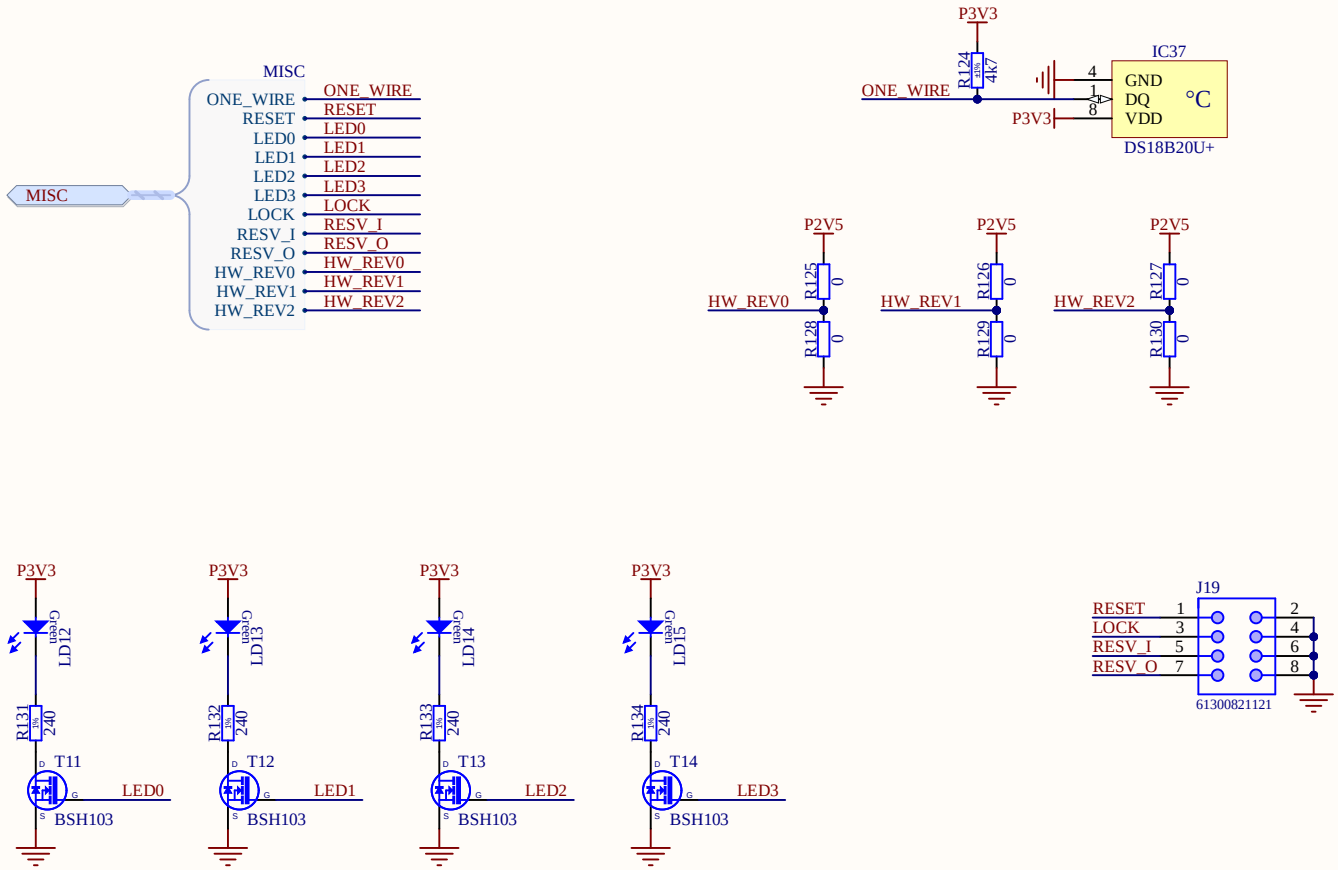

Title		
Size A4	Number	Revision
Date: 5.15.2024		Sheet of
File: C:\Users\..\Misc.SchDoc		Drawn By: