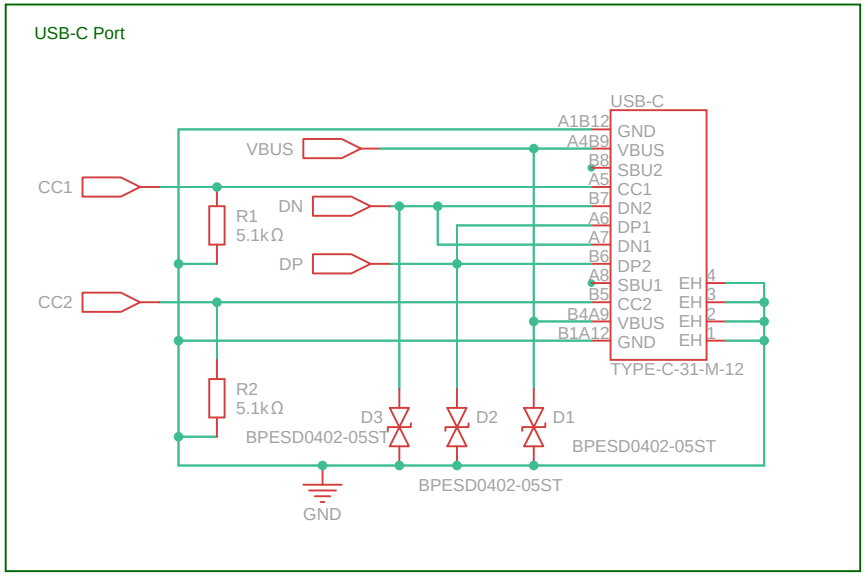

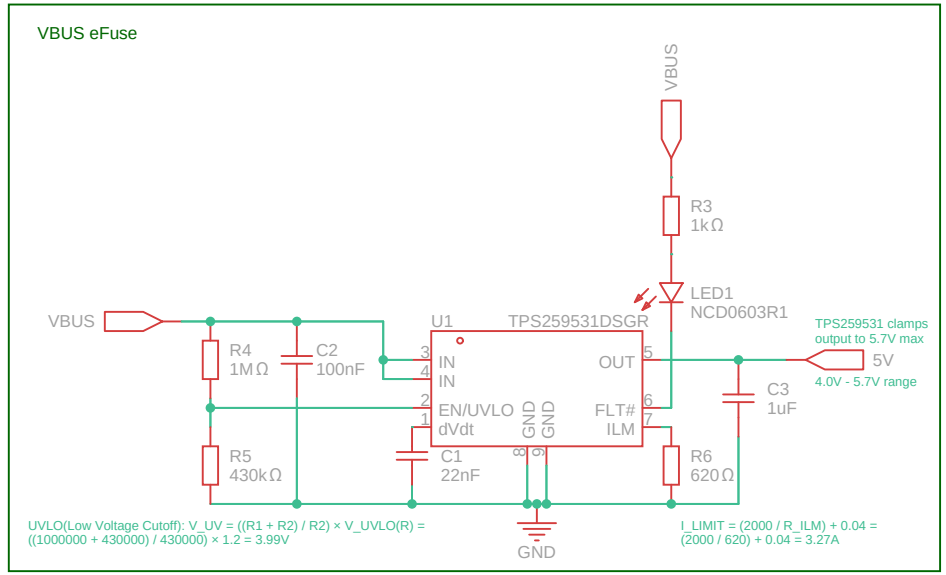

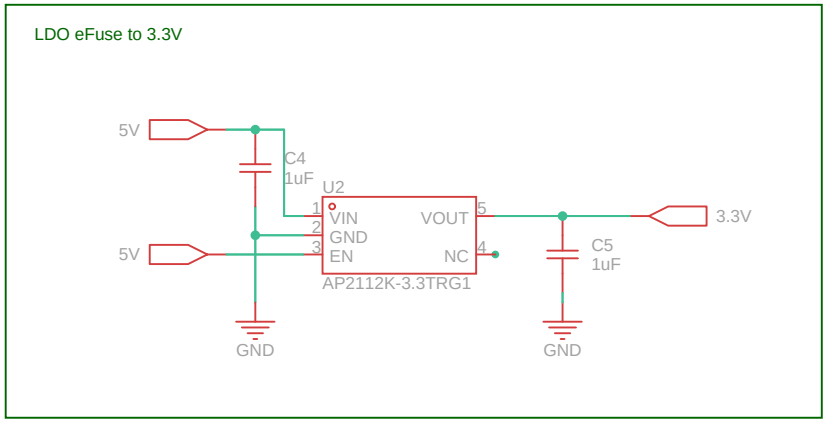

Schematic	DA15	Create at	2026-03-11
		Update at	2026-03-11
Board	DA15	Page	Power
Drawn		DA15	
Reviewed			
		Version	Size	Page 1 Total 3
EasyEDA		V1.0	A4	EasyEDA.com

© 2026 Elia Chiarucci
CERN-OHL-S v2 | https://ohwr.org/cern_ohl_s_v2.txt
Source: https://github.com/eliachiarucci/DA15

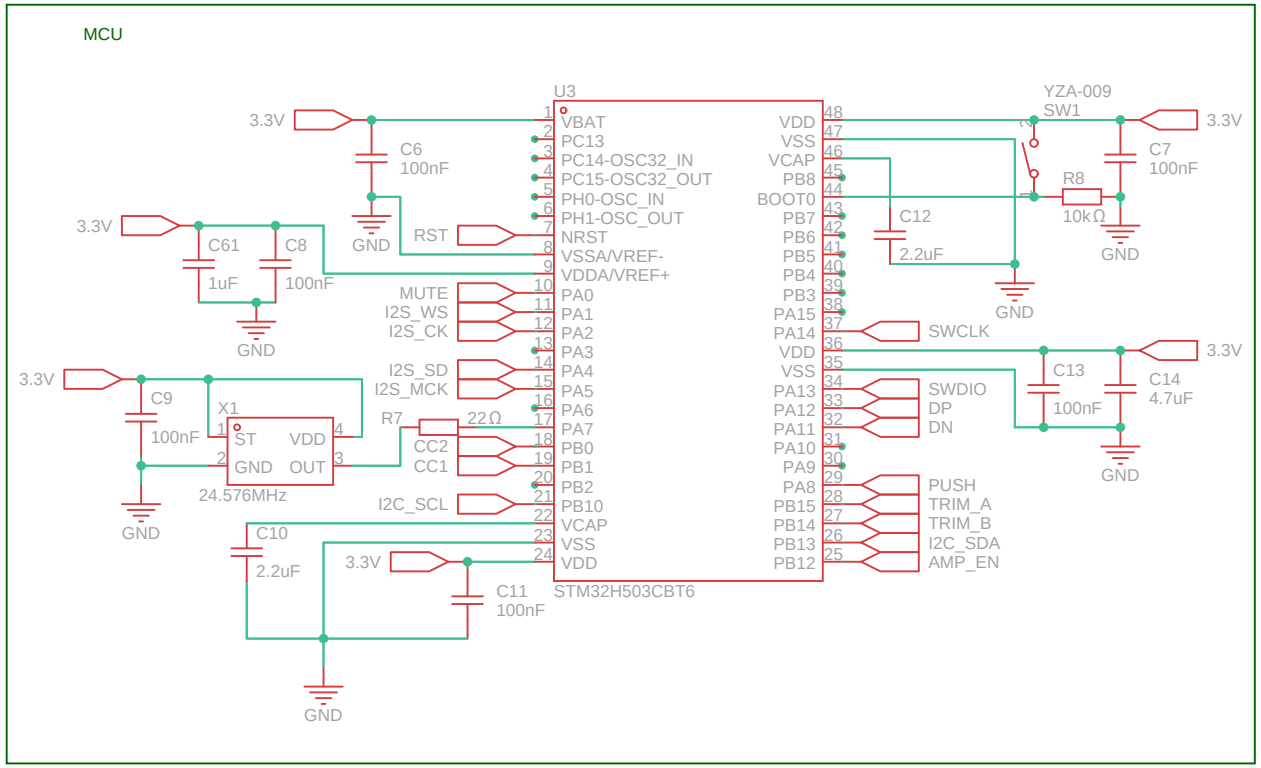

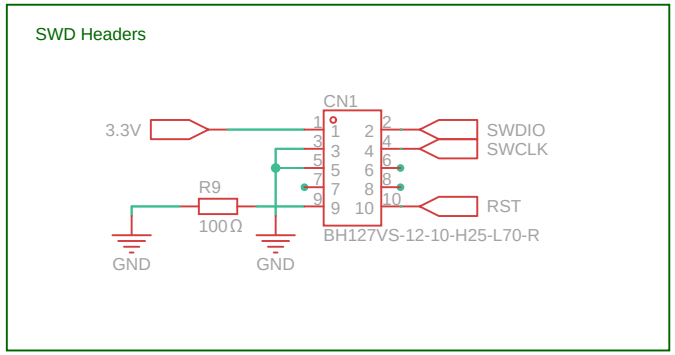

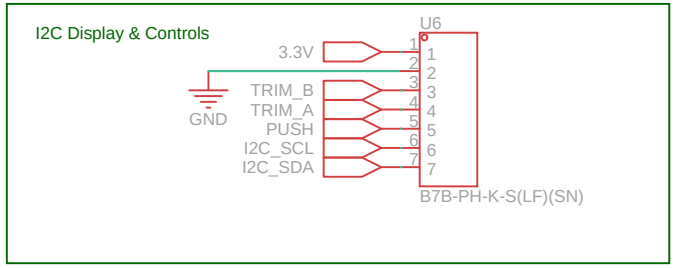

Schematic	DA15	Create at	2026-03-11
		Update at	2026-03-11
Board	DA15	Page	Controller
Drawn		DA15	
Reviewed			
		Version	Size	Page 2 Total 3
EasyEDA		V1.0	A4	EasyEDA.com

© 2026 Elia Chiarucci
CERN-OHL-S v2 | https://ohwr.org/cern_ohl_s_v2.txt
Source: https://github.com/eliachiarucci/DA15

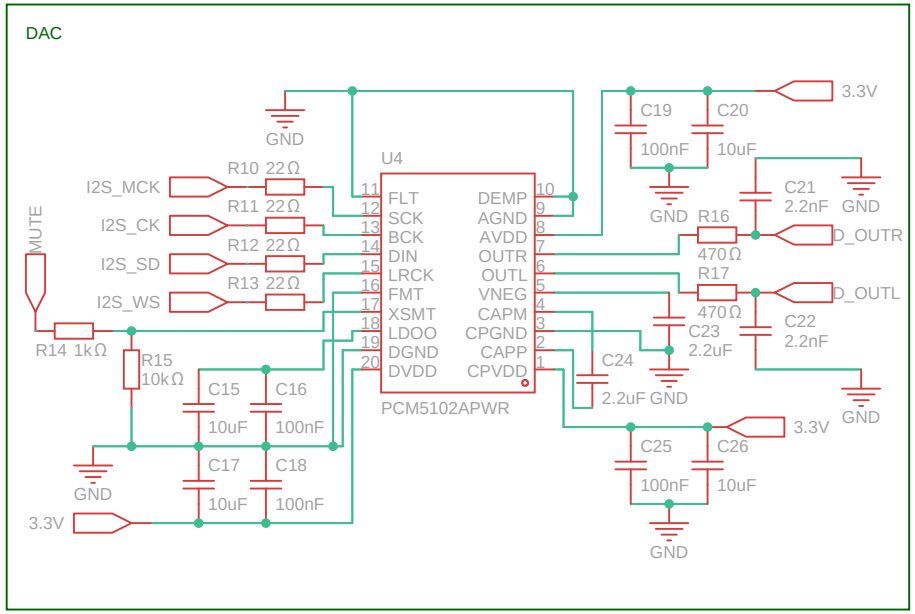

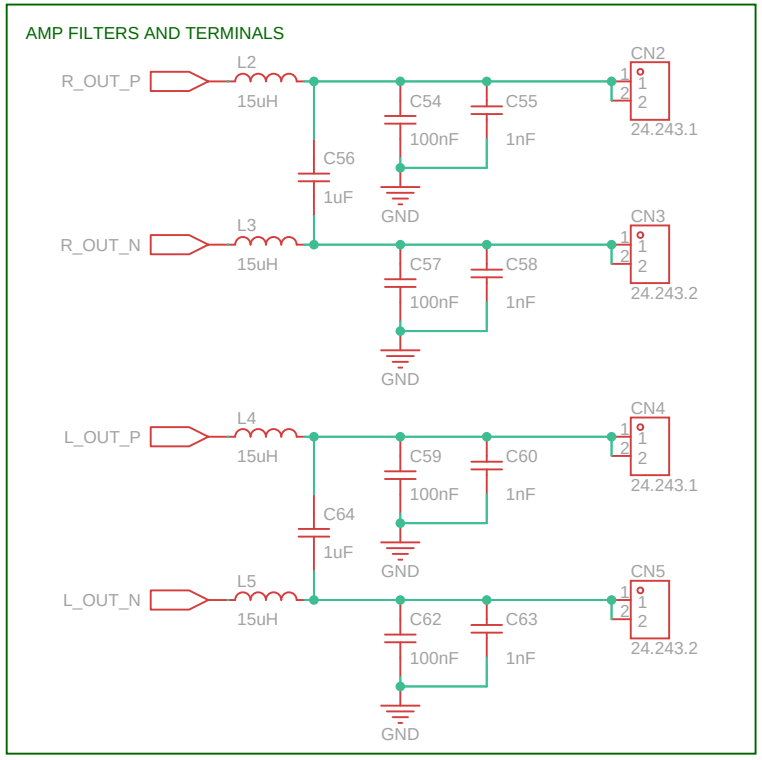

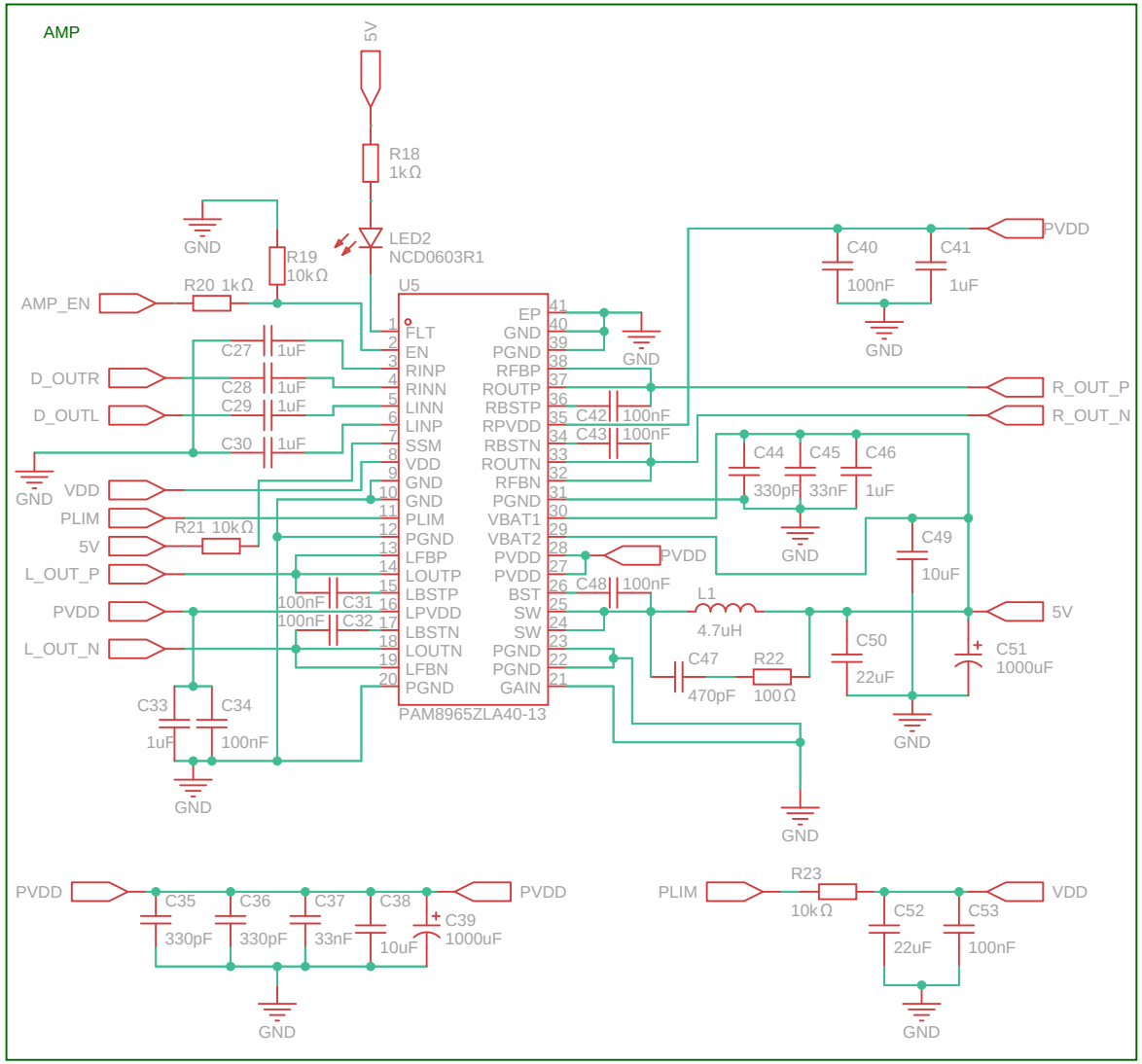

Schematic	DA15	Create at	2026-03-11
		Update at	2026-03-11
Board	DA15	Page	Audio
Drawn		DA15	
Reviewed			
		Version	Size	Page 3 Total 3
EasyEDA		V1.0	A4	EasyEDA.com

© 2026 Elia Chiarucci
CERN-OHL-S v2 | https://ohwr.org/cern_ohl_s_v2.txt
Source: https://github.com/eliachiarucci/DA15