AIP Conference Proceedings

RESEARCH ARTICLE | AUGUST 06 2024

Study of KWP2000, CAN, and UDS communication protocols for automotive diagnostic

Bhuvana Kumbhare; Kalyani Akant; Pankaj Chandankhede

AIP Conf. Proc. 3139, 030013 (2024)
https://doi.org/10.1063/5.0224443

View Online
Export Citation

Articles You May Be Interested In

The scale-up method for the hydrodynamic processes in a sorbent layer using CFD simulation with the Ergun's equation-based models

AIP Conf. Proc. (November 2021)

25 February 2026 09:34:09

AIP Publishing

Study of KWP2000, CAN , and UDS Communication Protocols for Automotive Diagnostic

Bhuvana Kumbhare [a)], Kalyani Akant [b)], Pankaj Chandankhede [c)]

Department of Electronics and Telecommunication Engineering, G H Raisoni College of Engineering Nagpur, India

[a)] *Corresponding email: bhuvana.kumbhare.mtechcom@ghrce.raisoni.net,*
[b)] *kalyani.akant@raisoni.net,*
[c)] *pankaj.chandankhede@raisoni.net*

Abstract. Diagnostic systems must be used to monitor and control parameters in original equipment manufacturers (OEMs) as the number of embedded electronic components in automobiles are increasing day-by-day. Lot of work is required to create an automobile component or a system. International Organization for Standardization (ISO) and Society of Automotive Engineers (SAE) have identified a variety of diagnostic system types based on the types of systems and specific diagnostics from the manufacturers. The complicacy of the system increases as the data length increases. The Quantum Computational analysis is quite beneficial to manage huge data. Quantum computational analysis is used in the three communication standards that are Keyword Protocol (KWP2000), Controller Area Network (CAN), and Unified Diagnostic Services (UDS). The diagnostic system in a car network utilizes to communicate with one another for OEMs and suppliers. This article covers the necessary tools and applications for each diagnostic and computational service that uses the communication protocol.

Keywords. Diagnostic Protocol, Automotive Communication Bus, Automotive Diagnostics, CAN, KWP, UDS, OBD.

25 February 2026 09:34:09

INTRODUCTION

In addition to an introduction of a diagnostics and service communication protocols, this paper also lists the appropriate tools and apps for increment in the computational speed of OEMs by using the Quantum computational diagnostics. The Quantum computational diagnostic determines the root cause of a vehicle problem by locating, assessing, and classifying symptoms. The Diagnostic methods are used to determine the underlying cause of an abnormal operation in order to correct it. For OEM and supplier, the functional diagnostic requirements, as well as their implementation, development, specifications, and features, are kept in a shared database that helps in the increment of computing speed. Quantum Computing with the open lines of communication helps in Product engineering, production, after-sales, and suppliers. Diagnostic capabilities could be applied during the development, manufacturing, and maintenance phases of a drive system. The modification and data maintenance for diagnostic needs must be done using a common database, such as Open Diagnostics Exchange (ODX).

Automatic Protocols

Diagnostic qualities can be used in the design, production, and maintenance phases of an automobile system. The first modification and data maintenance for diagnostic needs must be done using a common database, such as ODX. To complete all diagnostic systems, computer devices that can handle data transmission must be employed. They will be thoroughly examined, and a computational comparison study will be conducted. Certain diagnostic tools needed for

Second Online International Conference on Research Frontiers in Sciences
AIP Conf. Proc. 3139, 030013-1–030013-9; https://doi.org/10.1063/5.0224443
Published under an exclusive license by AIP Publishing. 978-0-7354-5018-9/$30.00

creation, debugging, and certification will be made accessible in order to deliver specific services to OEMs and suppliers.

DIAGNOSTIC COMMUNICATION OF VEHICLE

A vehicle is composed of the engine, as well as other sectors such as user and industry standards, basic components are the chassis, body, transmission supervision, and others. The block arrangement, the layout and structure of a motor ECU used to manage and operate a vehicle system are depicted in Fig. 1.

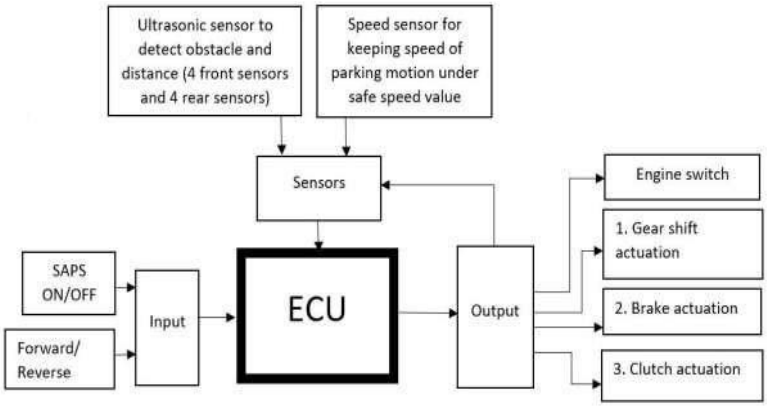

FIGURE 1. The architecture and block diagram of the engine ECU.

The schematic representation of the ECU in Fig. 2 depicts the control of a combustion engine. It depicts the principal input and output signals. The electrical requirements of the ECU must correspond to the driving conditions.

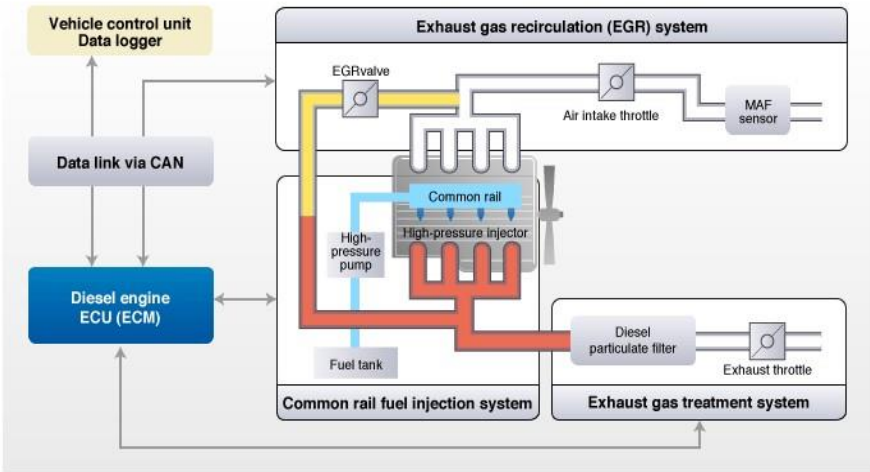

FIGURE 2. Electrical engine management utilizing an ECU

Automobile functions are implemented in an overly complicated manner employing electro-mechanical approaches or discrete circuit boards. The Point-to-point networks are used to transmit data concerning mass, expense, complex, and reliability problems. In certain contemporary automobiles, up to 60 ECUs or more are now in the norm which is depicted in fig. 3. These ECUs interacts with one another via a Gateway Control Unit utilizing a number of automotive bus protocols, handling the sheer complexity of ECUs in automobiles in an automotive bus topology poses

25 February 2026 09:34:09

a challenge for OEMs and automotive vendors. The several automotive protocols and network are shown in the fig. 4.

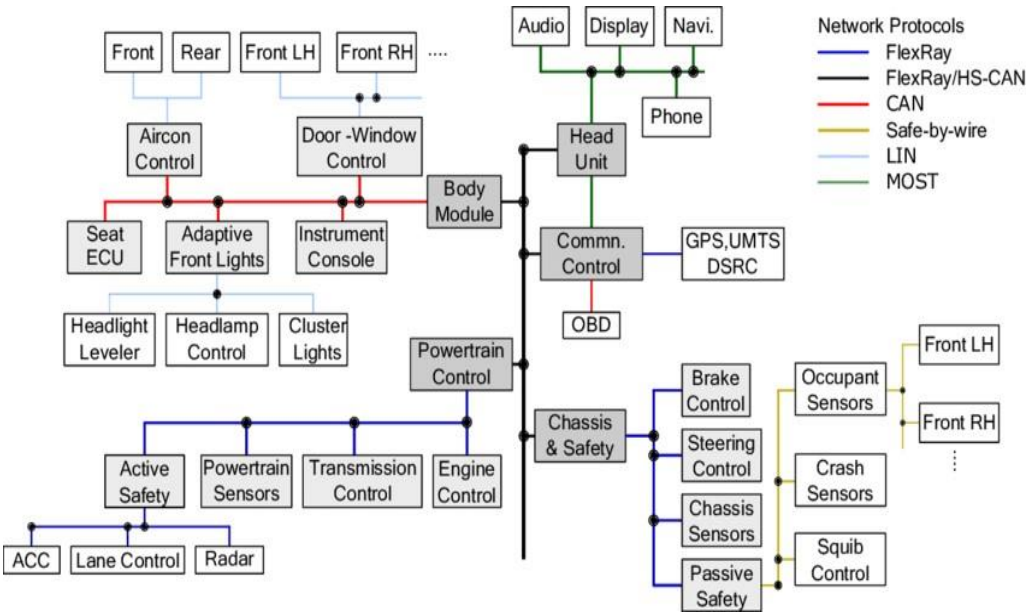

FIGURE 3: Design of vehicular network.

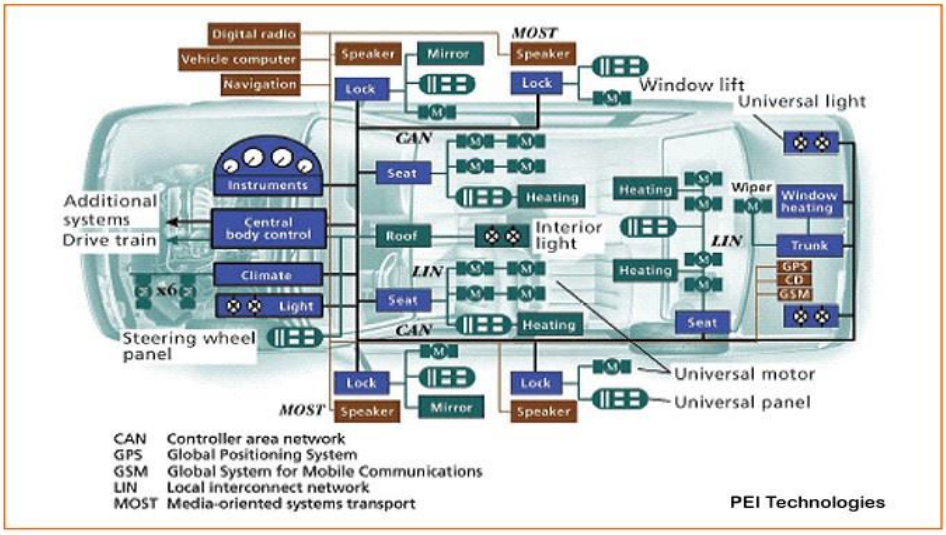

FIGURE 4. Diagnostic communication system for vehicles

Kwp-2000 – Keyword Protocol 2000

The OEM on-board automobile diagnostics employ KWP2000 whose structure is mentioned in Fig. 5, as a communication protocol. On Board Diagnostics program (OBD) Communicates via K-line between Tester and Vehicle which is covered by two significant International Standardization documents, ISO 9141[1] and ISO 14230[2]. A inspector can manage the diagnostic operations of a vehicle's Electronic Control Unit by using the widely used diagnostic service criteria provided by ISO 14230[2]. With node-to-node interconnections, also known as bus conversions, there is just single ECU on the link. The Data Link Layer is covered in ISO 14230-2[2], while ISO 14230-3[2] contains all the prerequisites for providing diagnostic services. A vehicle management and tribunal system need to be operational or controlled in order to use the protocol stacked as a multi-user bus system.

25 February 2026 09:34:09

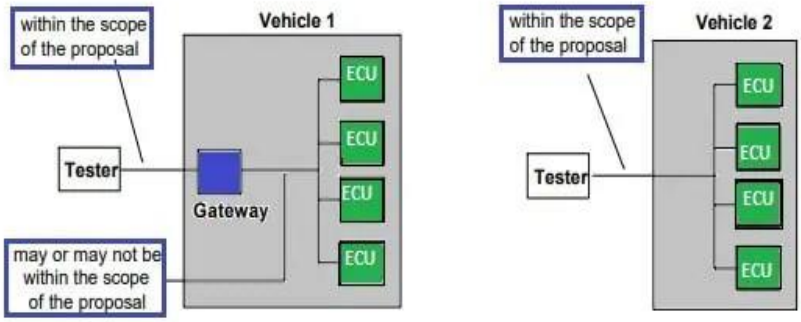

FIGURE 5.KWP-2000 Structure.

According to Wake-Up shown in the Fig. 6 at 5 baud, the Key method is not needed to keep up with new technologies until the tester specifically requests it. All configured ECUs should interface and initial data rates of 10,400 should be applied after the Wake-up procedure. [3]

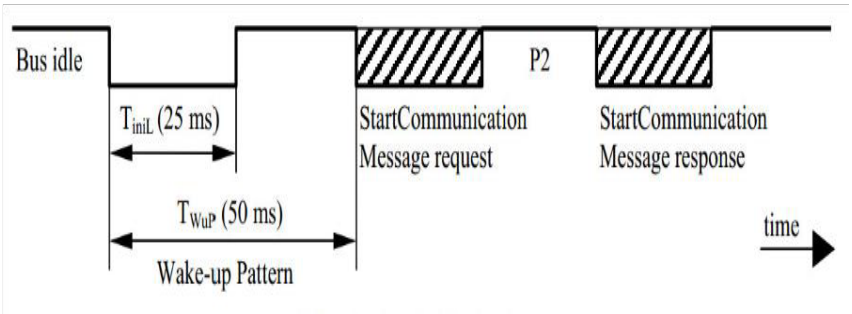

FIGURE 6.K-line Method

For continuous and diagnostic communication routing, the protocol is used to improve communication, and regulates CAN frame production and bus adjudication.

CAN Protocol Diagnostics

Controller Area Network, is a sequential communication system that complies with ISO standards. Many electronic control systems have been created in the automobile industry in an effort to increase comfort, safety, regulate the cost and also cuts the emission. In order to address the necessity for a transmission mechanism between ECUs, the exchange of digital information between road vehicles using the CAN for high-speed communication, is described in ISO 11898, of the CAN protocol. CAN transfers signals across the CAN bus.

A. CAN Protocol Features

Message-based addressing is a method that CAN use. Giving each communication a unique identification is part of message-based addressing shown in the Fig. 7. The Identifier classifies the message's content. Priority Assignments: The bus access priority indicated by the 11-bit or 29-bit identification is determined by the bit arbitration mechanism used by CAN [4]. Any communication rate that is appropriate for the size of the network may be employed, with the transmission technique that might be feasible to distinguish between these errors. In order to prevent an error-prone unit from interfering with the communication of other reliable units, this function helps to decrease the unit's communication priority [5]. The unit is also disconnected from the bus if there is a continuous data fault on the bus. The relationship between the data transmission rate and bus length is shown in Fig. 8 and the most common CAN bus medium is twisted pair which supports the maximum data transfer rate of 1Mbps. Coaxial cable or fiber optics are two more transmission techniques that might be employed.

25 February 2026 09:34:09

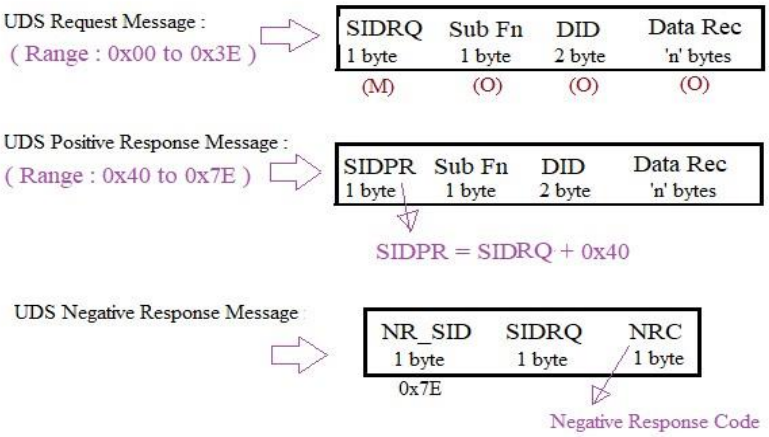

FIGURE 7. Organization for Messaging

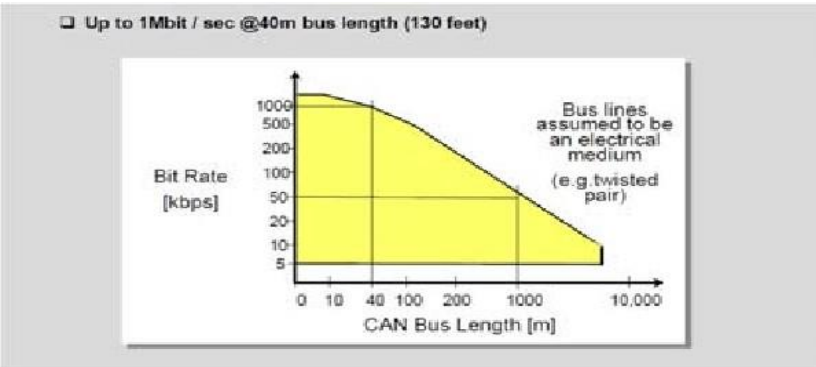

FIGURE 8. The relationship between data transmission rate and bus length.

B. CAN Message Format

The size of the identifier is the only distinction among both message formats supplied by the CAN protocol. The CAN frames depicted in the Fig. 9 has a conventional frame [6] (a) that has an Identification size of 11 bits, while the extended frame (b) has an Identification range of 29 bits.

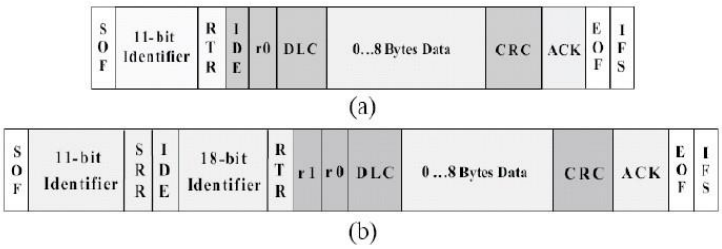

FIGURE 9. Two types of CAN frames are available: (a) standard and (b) extended.

25 February 2026 09:34:09

In the beginning of the data frame, there is just one dominant bit. Arbitration field: The arbitration field is made up of the RTR bit that follows the Identifier bits in the field (Remote Transmission Request). The identity is 11 bits long for ordinary Data frames and 29 bits long for extended Data frames, respectively. Priority is given to the RTR bit. CRC stands for Cyclic Redundancy Check. Validation is performed on the SOF, arbitration field, control field, and data field. In a message, it can find up to five mistakes. This field is terminated by the CRC delimiter, a recessive bit delimiter [7]. If no other nodes on the bus have detected any mistakes relating to the CRC, the initial bit of the acknowledgment field is important. An error frame is transmitted in this situation.

C. CAN Bus Arbitration scheme:

Arbitration is used to resolve bus access conflicts. Every device has the capacity to begin a message transmission whenever the CAN bus is open. Each transmitting device delivers its identity during the arbitration phase, which is compared to the amount of data of the bus.[8] The numerous units begin the transmission along with the communication protocol that are resolved in the tribunal field of each delivered frame, commencing with the initial bit which in shown in the Fig. 10.

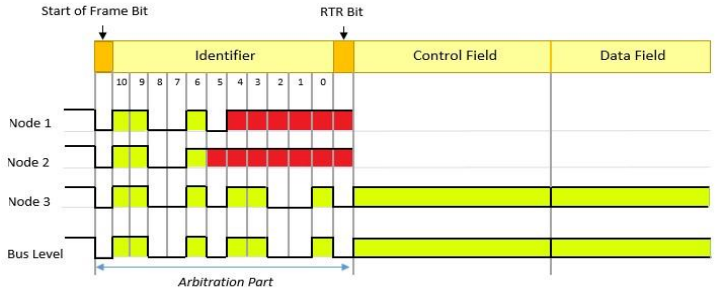

FIGURE 10. The CAN Bus Arbitration Scheme

D. CAN Control Structure:

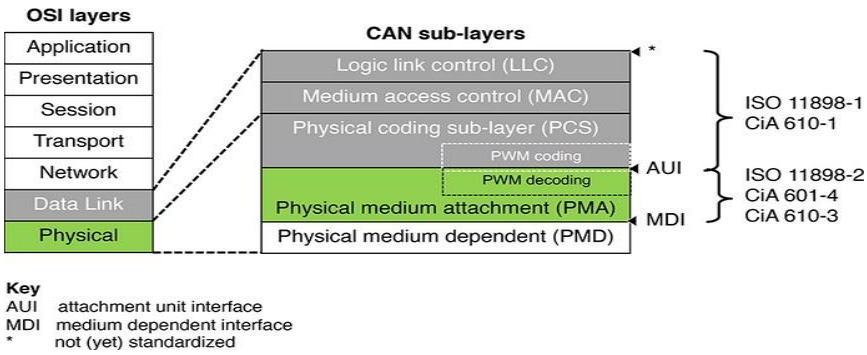

FIGURE 11. ISO 11898 CAN (125 kbps to 1 Mbps)

The building of the CAN Control System Resistive Model is shown in Fig.11.The interaction of the OSI layers with the CAN sub-layers is there in the ISO-11898. In order to lessen the impacts of reflection on the bus line, the ISO-11898[9], CAN High Speed, standard suggests that network wiring technology is akin to a single line design. To avoid signal duplications along the bus, it is necessary to utilize twisted pair cables, either insulated or unprotected, having a nominal impedance of 120 ohm and terminated with a 120-ohm resistor at either end.

E.CAN Bus Error Handling:

The CAN layer is implemented for safe packet transfer which includes the debugging, and signalling. The distinct method used to identify errors in CAN is as follows: [10] the transmitter computes a 15-bit CRC from the message

25 February 2026 09:34:09

content to detect cyclic redundancy faults. Every receiver who receives the signal would do a fresh CRC computation and check it with the value provided. If a receiver notices an incorrect bit, it will show an error, for example, in the 3-bit interframe gap, ACK delimiter, or CRC delimiter.[11] If a message is not acknowledged, an ACK error is generated. To calculate the bit error, the transmitter "Reads back" each broadcast bit. A bit mistake is recognized if the observed value and the specified value disagrees. By inserting an additional bit fault are identified.

V Unified Diagnostics Service (UDS): Iso 14229-1

The UDS Protocol was created to meet the criteria for diagnostic systems employing CAN buses. Its foundation is the Keyword Protocol concept (KWP2000). By integrating ISO Standards 15765-3 and 14230-3[12], the UDS Protocol was developed.

TABLE 1. UDS Diagnostics Functions

No	Diagnostic Functions	Examples
1	Communication Management	Session Control, Device Reset, Security Access, Communication Control
2	Data	Read Identifiers or Memory, Write Identifiers or Memory
3	Stored Data	Read Diagnostics Information, Clear Diagnostics Information
4	I/O Control	Control Input or Output
5	Reprogramming	Download and Update of Data

As was mentioned in the section on diagnostic services, several standards are utilized for various types of diagnostic services mentioned in the Table 1 whereas the Table 2 shows the enhanced diagnostics on CAN(UDS). A protocol-neutral standard, according to ISO 14229-1[13] is UDS. The Network Layer Service Definition is required to implement the message transfer rules. Fig. 12 displays the extra possibilities for the ISO 14229-1[14] protocol specification.

TABLE 2. OSI Layer specification of UDS

No	OSI Layers	Enhanced Diagnostics on CAN(UDS)
1	Application Layer	ISO 14229-1 & ISO 15765-3
2	Presentation Layer	N/A
3	Session Layer	ISO 15765-3
4	Transport Layer	ISO 15765-2
5	Network Layer	ISO 15765-2
6	Data Link Layer	ISO 11898/SAE J1939 – 15
7	Physical Layer	ISO 11898/SAE J1939 - 15

25 February 2026 09:34:09

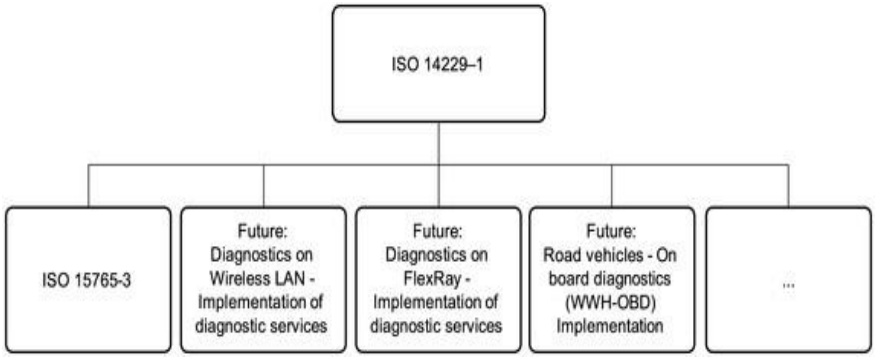

FIGURE 12. ISO 14229-1 UDS Existing Standards and Possible Future Implementation.

ODX – Open Diagnostic Data Exchange

ISO 22901 specifies the data format for the transmission of Electronic Control Unit (ECU) diagnostic and programming data between system suppliers, automakers, service centers, and diagnostic equipment from various manufacturers.[15] A consistent diagnostic description format for ODX users should be available for OEMs, suppliers, producers, and the aftermarket user that can be utilized in the creation of ECUs.

COMPARISON ANALYSIS

The comparative analysis of diagnostics protocols for different OSI layers is mentioned in Table 3 and the essential elements of the diagnostic techniques are employed to the ISO Standards. The diagnostics communication protocols ISO 14230 and ISO 11898 are crucial for the future of automotive vehicle communication applications.

TABLE 3. Comparative Analysis of diagnostics protocols

Sr. No		KWP	CAN	UDS
	Standards	**ISO**	**ISO**	**ISO**
1	Application Layer	ISO 14230-3	ISO 15765-3	ISO 14229-1
2	Presentation Layer	N/A	N/A	N/A
3	Session Layer	N/A	N/A	ISO 15765-3
4	Transport Layer	N/A	N/A	ISO 15765-2
5	Network Layer	N/A	ISO 15765-2	ISO 15765-2
6	Data Link Layer	ISO 14230-2	ISO 11898	ISO 11898
7	Physical Layer	ISO 14230-1	ISO 11898	ISO 11898

25 February 2026 09:34:09

CONCLUSION

To ensure the correct functioning and monitoring of automotive systems, communication protocols and standards are followed while implementing embedded electronic circuits. This paper highlights the core ideas of diagnostics network standards using communication protocols. The OSI layers are associated with the ISO 11898, CAN 2.0, ISO 14230-3, and UDS standards that were described in this article. This study has improved the understanding of computational automobile diagnostic standards and ECU Connectivity with Testing Tool.

REFERENCES

1. K. Scott, "The Communication Protocols: Iso 9141/Kwp2000," Iee Communication Standards For European On-Board-Diagnostics Seminar (Ref. No. 1998/294), London, Uk, 1998, Pp. 4/1-4/4.
2. R. Malekian, N. R. Moloisane, L. Nair, B. T. Maharaj and U. A. K. Chude-Okonkwo, "Design and Implementation of a Wireless OBD II Fleet Management System," in IEEE Sensors Journal, vol. 17, no. 4, pp. 1154-1164, 15 Feb.15, 2017, doi: 10.1109/JSEN.2016.2631542.
3. K. Kakaraparty, E. Muñoz-Coreas and I. Mahbub, "The Future of mm-wave Wireless Communication Systems for Unmanned Aircraft Vehicles in the Era of Artificial Intelligence and Quantum Computing," 2021 IEEE MetroCon, Hurst, TX, USA, 2021, pp. 1-8, doi: 10.1109/MetroCon54219.2021.9666048.
4. H. J. Spoelder, D. M. Germans, L. Renambot, H. E. Bal, P. J. de Waal and F. C. A. Groen, "A framework for interaction of distributed autonomous systems and human supervisors," in IEEE Transactions on Instrumentation and Measurement, vol. 51, no. 4, pp. 798-803, Aug. 2002, doi: 10.1109/TIM.2002.803400.
5. Che-Cheng Chang, Jichiang Tsai and Shi-Jia Pei, "A quantum PSO algorithm for feedback control of semi-autonomous driver assistance systems," 2012 12th International Conference on ITS Telecommunications, Taipei, Taiwan, 2012, pp. 553-557, doi: 10.1109/ITST.2012.6425240.
6. C. -L. Wey, C. -H. Hsu, K. -C. Chang and P. -C. Jui, "Enhancement of Controller Area Network (CAN) bus arbitration mechanism," 2013 International Conference on Connected Vehicles and Expo (ICCVE), Las Vegas, NV, USA, 2013, pp. 898-902, doi: 10.1109/ICCVE.2013.6799923.
7. R. O. S. Juan and H. S. Kim, "Utilization of DSP algorithms for Cyclic Redundancy Checking (CRC) in Controller Area Network (CAN) controller," 2016 International Conference on Electronics, Information, and Communications (ICEIC), Danang, Vietnam, 2016, pp. 1-4, doi: 10.1109/ELINFOCOM.2016.7562991.
8. H. Chen and J. Tian, "Research on the Controller Area Network," 2009 International Conference on Networking and Digital Society, Guiyang, China, 2009, pp. 251-254, doi: 10.1109/ICNDS.2009.142.
9. Titarmare A. S., M. M. Khanapurkar, and P. H. Chandankhede. "Analysis of Traffic Flow at Intersection to Avoid Accidents using Nagel-Schreckenlerg (NS) Model." In 2020 Fourth International Conference on I-SMAC (IoT in Social, Mobile, Analytics and Cloud)(I-SMAC), pp. 478-484. IEEE, 2020.
10. K. Kriti, P. H. Chandankhede, and A. S. Titarmare. "Design of Human Activity Recognition System Using Body Sensor Networks." In 2021 6th International Conference on Communication and Electronics Systems (ICCES), pp. 1011-1016. IEEE, 2021.
11. Kolhe, Mukul, R. Paturkar, U. Sahu, Sofia Pillai, and A. Titarmare. "Analytic for Temperature and Humidity–Cloud based Forecasting and Dashboard." In 2020 4th International Conference on Intelligent Computing and Control Systems (ICICCS), pp. 674-679. IEEE, 2020.
12. "ISO/IEC/IEEE International Standard - Systems and software engineering--Life cycle management--Part 3: Guidelines for the application of ISO/IEC/IEEE 12207 (software life cycle processes)," in ISO/IEC/IEEE 24748-3:2020(E) , vol., no., pp.1-76, 23 Oct. 2020, doi: 10.1109/IEEESTD.2020.9238526.
13. Jajulwar, K. K., and A. Y. Deshmukh. "Design of SLAM based adaptive fuzzy tracking controller for autonomous navigation system." In 2016 10th International Conference on Intelligent Systems and Control (ISCO), pp. 1-5. IEEE, 2016.
14. M. Wajape and N. B. Elamana, "Study of ISO 14229-1 and ISO 15765-3 and implementation in EMS ECU for EEPROM for UDS application," 2014 IEEE International Conference on Vehicular Electronics and Safety, Hyderabad, India, 2014, pp. 168-173, doi: 10.1109/ICVES.2014.7063742.
15. Kolhe, Pranita, K. Kalbande, and A. Deshmukh. "Internet of Thing and Machine Learning Approach for Agricultural Application: A Review." In 2022 10th International Conference on Emerging Trends in Engineering and Technology-Signal and Information Processing (ICETET-SIP-22), pp. 1-6. IEEE, 2022.

25 February 2026 09:34:09