REV	EC No.	DESCRIPTION	Symbol	DATE
A	/	new release	/	Dec. 12, 2020

RoHS Compliant Pb

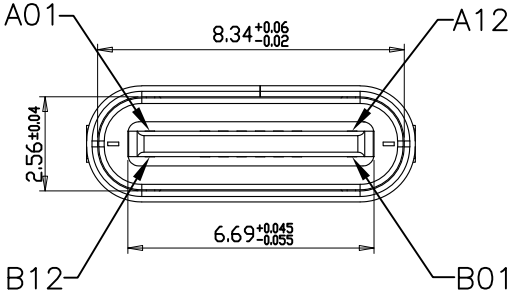

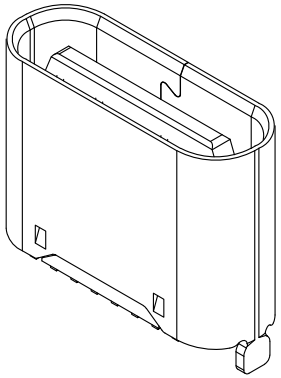

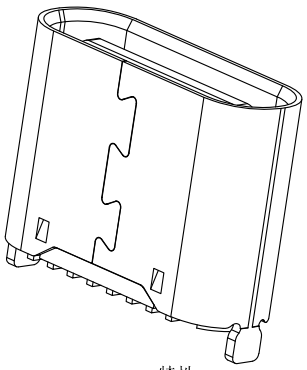

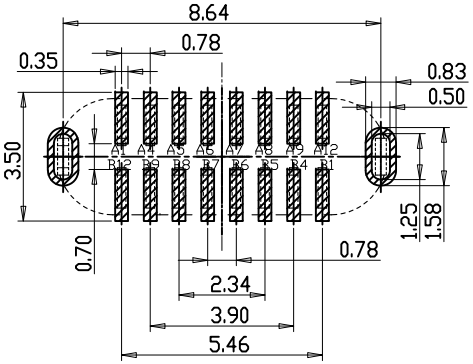

RECOMMENDED P.C.B. LAYOUT

TOLERANCE UNSPECIFIED ±0.05mm

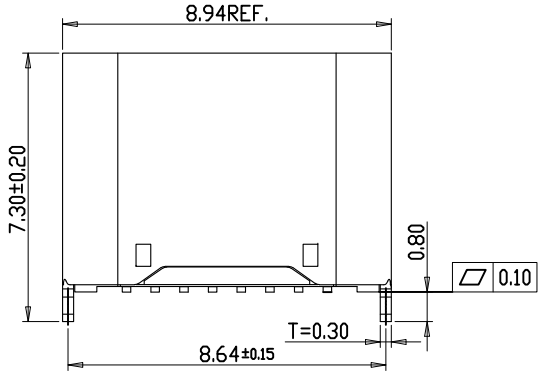

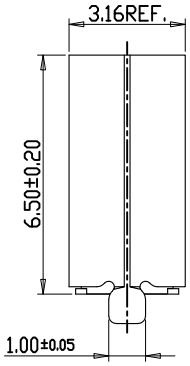

特性：

一、电气性能：E1CTRICAL
1. 额定电流：3.0A
2. 接触阻抗：40 MILLIOHMS MAX
3. 耐电压：150V AC / 1 mA MAX
4. 绝缘阻抗：150V DC/100 MEGA OHMS MIN

二、机械性能：
1. 插入力：5~20N
2. 拨出力：8~20N
3. 使用寿命：10000次、拔出力 6N MIN

三、材料：MATERIAL
1. 塑胶：LCP UL94V-0
2. 端子：C2680 T=0.15MM
3. 外壳：SUS304 T=0.30MM
4. 卡勾：SUS304 T=0.15MM

四、电镀:FINISH
1. 端子：接触点镀金3U″MIN
PIN脚焊接区域镀金1U″MIN.
2. 外壳：镀镍50U″MIN（盐雾48H）

五、电镀品需做粘锡测试：粘锡面积达到95%以上。

六、SMT回流焊（峰值260° C±5° C）不能起泡、熔胶、变色不良（变形在公差范围以内）

七、工作温度：-40° C~+85° C

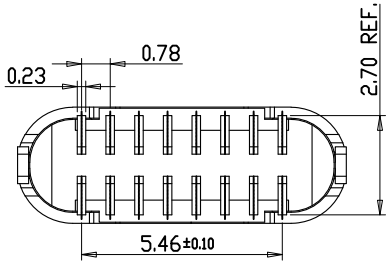

A1	GND	B12	GND
A4	VBUS	B9	VBUS
A5	CC1	B8	SBU2
A6	D+	B7	D-
A7	D-	B6	D+
A8	SBU1	B5	CC2
A9	VBUS	B4	VBUS
A12	GND	B1	GND
PIN	SIGNAL NAME	PIN	SIGNAL NAME

For more information, please help to contact: connmold@foxmail.com Tel.:18922965797

WWW.connmold.COM

ConnMold

DIMENSION UNITS: MM	TOLERANCE: X±0.50 .XX±0.25 .X±0.35 .XXX±0.15	PART NAME: USB TYPE C RECEPTACLES 16 PIN VERTICAL 6.50MM
DRWN:Robert	Dec.12,2020	
CHK'D:Yuri	Dec.12,2020	PART NUMBER: CMUCF661014A / REVISION: A
APPR:Linda	Dec.12,2020	
THIRD ANGLE PROJECTION	CUSTOMER P/N: /	CUSTOMER: GENERAL MARKET / SHEET NUMBER: 1 OF 2

REV	EC No.	DESCRIPTION	Symbol	DATE
A	/	new release	/	Dec. 12, 2020

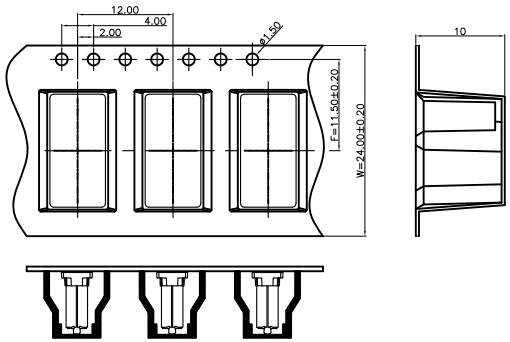

① 产品入载带示意图

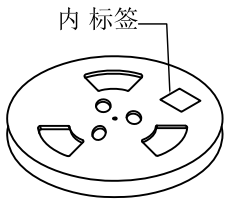

② 卷盘贴标签示意图

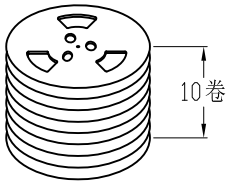

③ 10盘产品叠层示意图

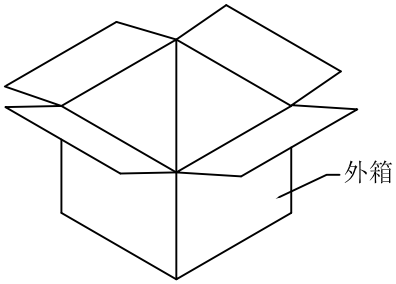

④ 产品入外箱示意图

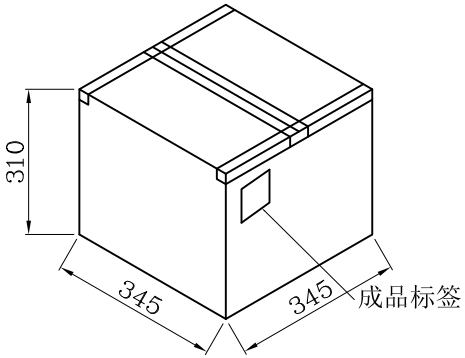

⑤ 外箱封箱示意图

包装说明:

1. 将检验好的成品;SMT朝下放入载带底部;每卷装800PCS产品;具体如图一所示
2. 将包装好的产品;每盘必需贴上内标签;具体如图二所示
3. 将贴好内标签的产品每10盘叠;具体如图三所示
5. 装好后并封好纸箱及贴好相关标签;具体如图五所示;
   (产品包装的标签，如客户有要求，请按客户要求包装出货)
6. 载带前面留10PCS空格，后面留10PCS空格
7. COVER与CARRY剥离力:50-125g,速度:300mm/分钟左右,
   剥离角度:165°-180°

For more information, please help to contact: connmold@foxmail.com Tel.:18922965797

WWW.connmold.COM

ConnMold

DIMENSION UNITS	TOLERANCE
MM	X±0.50 .XX±0.25 .X±0.35 .XXX±0.15

DRWN:Robert	Dec.12,2020	
CHK'D:Yuri	Dec.12,2020	
APPR:Linda	Dec.12,2020	
THIRD ANGLE PROJECTION	CUSTOMER P/N	/

PART NAME: USB TYPE C RECEPTACLES 16 PIN VERTICAL 6.50MM

PART NUMBER: CMUCF661014A

REVISION: A

CUSTOMER: GENERAL MARKET

SHEET NUMBER: 2 OF 2