TUNING S.U. CARBURETTERS

INCLUDING FULL NEEDLE CHARTS

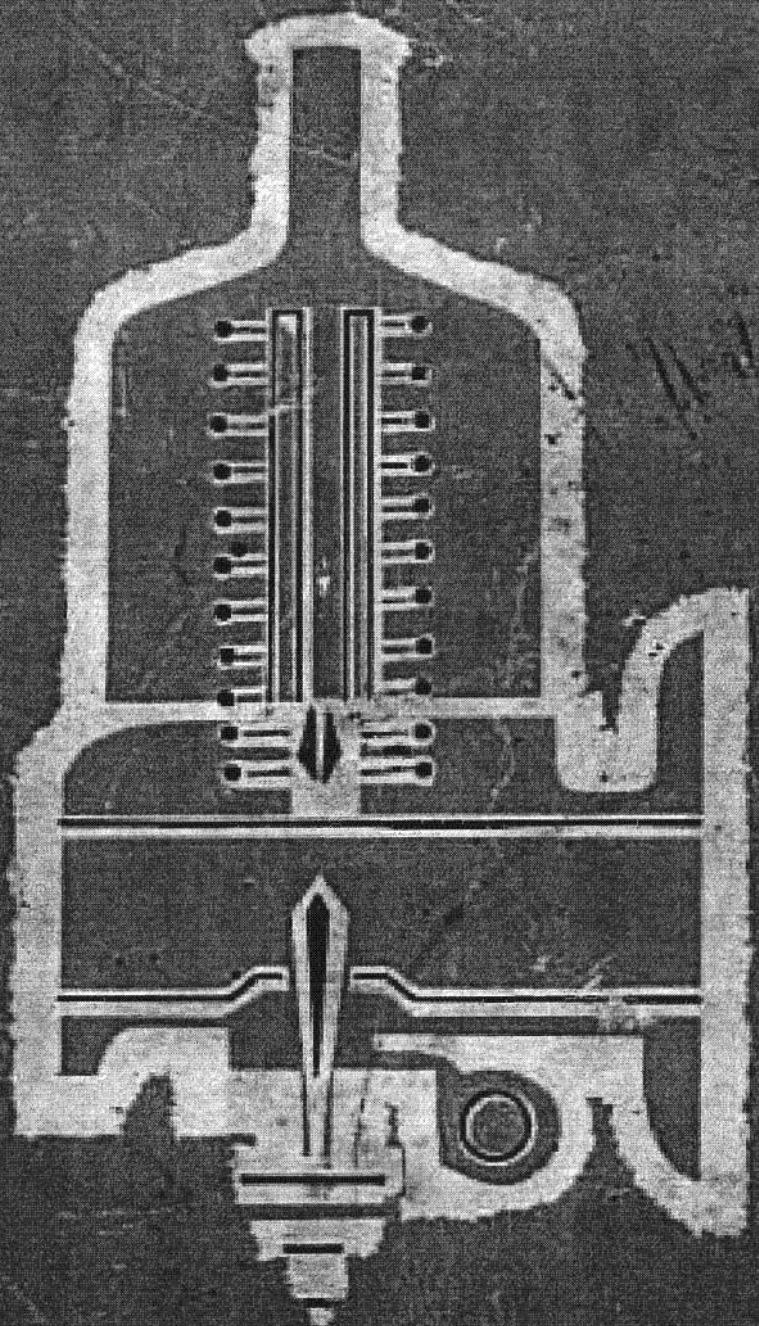

CARS AND CAR CONVERSIONS

SPEED SPORT MOTORBOOKS

97L

TUNING

CARBURETTERS

INCLUDING FULL NEEDLE CHARTS

CONTENTS

SECTION 1

A four-point guide to getting the best performance and economy from your S.U.(s). Page 6

SECTION 2

Servicing, dismantling and reassembly. Page 12

SECTION 3

Tuning twin carburetters. Page 24

APPENDIX 1

Carburetter specifications Page 31

APPENDIX 2

Needle charts Page 38

SPEED SPORT MOTOBOOKS

THE PERFORMANCE PAPERBACKS

INTRODUCTION TO TUNING
Martyn Watkins
The first in a series of tuning companions designed to give the novice a complete guide to all aspects of the tuning and modification of the production car. This book covers the theory of how a car works and the methods by which it can be made to work more efficiently.

37½p (7/6)

TUNING COMPANION VOL. 2. ENGINES AND TRANSMISSIONS
Martyn Watkins
Following on from the preliminaries of 'Introduction to Tuning' this second book explains the tuning possibilities for cylinder heads, valves, camshafts, carburetters, cranks and transmissions.

50p (10/-)

Tuning Companion Vol. 3—Suspension and brakes by Martyn Watkins

This book is the third and final volume in the series of Tuning Companions by Martyn Watkins. It enlarges on the details given in volume 1 and covers suspension and its modifications, wheels and tyres, brakes, bodywork modification instruments and lights.

50p (10/-)

The Speed Sport Motobooks series is designed to present the performance and motor sport enthusiast with inexpensive guides to their particular enthusiasm. The books are constantly re-edited to keep up with modern trends and innovations, and are written by accredited experts backed by the editorial team from the monthly magazine Cars and Car Conversions. The list is always growing and some of the more popular titles are listed here. Should you require an up to date list, please send a stamped addressed envelope to us at the address below.

MARQUE TUNING GUIDES

TUNING A MINI by Clive Trickey	90p	☐
MORE MINI TUNING by Clive Trickey	70p	☐
TUNING STANDARD-TRIUMPHS up to 1300 c.c.	50p	☐
TUNING STANDARD TRIUMPHS over 1300cc	£1·60	☐
TUNING VOLKSWAGENS by Peter Noad	90p	☐
TUNING ESCORTS AND CAPRIS by David Vizard	80p	☐
TUNING BMC SPORTS CARS by Mike Garton	80p	☐
TUNING ANGLIAS & CORTINAS	60p	☐
TUNING TWIN CAM FORDS	90p	☐
TUNING IMPS by Willy Griffiths	50p	☐
TUNING VIVAS by Blydenstein and Coburn	50p	☐
TUNING V8 ENGINES by David Vizard	£1·50	☐

CARBURETTER MAINTENANCE AND TUNING

S.U. CARBURETTORS	40p	☐
WEBER CARBURETTORS by John Passini	70p	☐
STROMBERG CARBURETTERS	40p	☐

SPORT HANDBOOKS

HOW TO START RALLYING by R. Hudson-Evans	90p	☐
HOW TO START MOTOR RACING by Wally Hall	60p	☐
HOW TO START AUTOCROSS AND RALLYCROSS	70p	☐

AUTOMOBILE ENGINEERING

INTRODUCTION TO TUNING	37½p	☐
ENGINES & TRANSMISSIONS	50p	☐
SUSPENSION & BRAKES	50p	☐
AUTO ELECTRICS by David Westgate	90p	☐
MODIFYING PRODUCTION CYLINDER HEADS	40p	☐
RACING ENGINE PREPARATION by Clive Trickey	80p	☐
CAR CUSTOMISING by Paul Cockburn	90p	☐

These and other advertised Speedsport Motobooks should be obtainable from all good booksellers. If you have any difficulty please tick the appropriate box and send your remittance for the purchase price plus 7½p for postage and packing direct to us.

SPEEDSPORT MOTOBOOKS

ACORN HOUSE, VICTORIA ROAD, ACTON, LONDON W3.

FIRST IMPRESSION APRIL 1968
SECOND IMPRESSION JULY 1970

ACKNOWLEDGEMENT

We should like to acknowledge the invaluable assistance given by the S.U. Carburetter Company in letting us reproduce so much of their literature. In particular we thank them for the information on their carburetter specifications and needles — which will be of so much help to readers of this book.

We hope that this book will serve as a trusty guide to millions of motorists running cars with S.U. carburetters.

IMPORTANT

The tuning procedure described in this publication does not apply to vehicles sold in the U.S.A. after October, 1968, and which are made to satisfy the U.S.A. statutory regulations regarding exhaust emission. These carburetters must not be dismantled or the settings altered without reference to the relevant manufacturers' servicing instructions.

Printed and Published by

SPEED AND SPORTS PUBLICATIONS LTD

Acorn House, Victoria Road, Acton, London W.3.

© Copyright 1968 by Speed and Sports Publications Ltd. *All rights reserved*

SECTION I

SINCE so many people have been writing in asking what needles, and jets to use in such and such car or induction set-up, and in view of the fact that it is impossible in most cases to give a clear cut answer we have attempted to explain just how one can obtain the correct answers.

First let us consider why it is usually impossible to give a clear-cut answer to reader's carburation problems. As explained in the recent Mini Tuning series and book, even small variations in engine specification can radically alter the carburation requirements of an engine. These variations can be as obscure as small differences in port or chamber shape, or as obvious as the fitting of larger valves and different manifolds and camshafts. Thus it is quite possible that two identical motors with outwardly similar conversions, and identical written specifications, can in fact have quite different carburation requirements. To complicate matters even further there is still the human factor of the fuel-consumption-to-performance-ratio preference of the individual. Tuning an S.U. Carburetter installation to match an engine specification is, a matter of selecting the following items:—

i Size and number of carburetter(s) to be used.

ii Strength of piston spring fitted above the carburetter piston.

iii Entry of air into carburetter. i.e:—The fitting of an air cleaner system or the selection of a size and type of ram pipe, or the decision to use open-intakes.

iv Profile of jet needle.

Size of jet and range of jet needles is governed by the size of carburetter.

To be certain of obtaining the correct solutions to the above points, the engine has to be mounted on a test bed and a series of set procedures carried out. However, it is possible to arrive at a carburation setting which is reasonably close to the optimum by careful road testing and applying a given sequence to the operation.

It is advisable, after a long run with an experimental jet needle fitted, to check both spark plug appearance and condition of the tail pipe bore. In both cases 'whiteness' is a sign of weak mixture.

Having obtained a jet needle which allows the car to accelerate smoothly up to maximum revs, is steady under part throttle conditions and is also satisfactory at the top end, then consumption tests can be carried out.

These should be undertaken in good weather conditions and if the standard fuel system is used (sometimes a separate gallon tank is fitted for this purpose), fill the tank to the brim, note the mileage carefully and refill to the brim. This will give the exact quantity of

fuel used.

To obtain the best m.p.g. figures without sacrificing performance, these consumption checks should be done at steady speeds, (say 30, 40 and 50 m.p.h.), and also at top speed; then if there is excessive consumption at particular points on the needle then a closer setting can be looked for. (See back of this book), bearing in mind what part of the needle is affected.

Two last points to remember are:—

When going from weak to rich on the setting it is usual to try a dimension about ·002″ (two 'thou') smaller at a time, but when going from rich to weak at a point on the needle, it is advisable to go no more than ·001″ (one 'thou') larger on the dimensions, unless there are signs of excessive richness.

If these methods are to be used for jet needle determination please use the utmost care whilst carrying out checks on the public highways —really such road testing requires a test track.

Size of Carburetter.

An alteration in size of carburetter should only be necessary if the breathing capacity of the engine has been substantially increased. To improve the breathing will require possibly larger inlet valves, alteration to the head or ports, a change of camshaft or an increase in engine capacity.

Polishing and lining-up the ports and increasing compression by about one ratio is not really sufficient justification for increasing carburetter size.

If larger instruments are to be fitted then the next size should be used; it is very rare that an engine's breathing capacity is increased to the stage where it requires an increase of two sizes. Remember if a larger instrument is fitted to a power unit which does not really merit this increase in carburetter size, the piston will not reach its full travel—the only benefit achieved will be a more impressive underbonnet appearance!

Piston spring

Piston springs are identified by a colour code and this can be found painted on the end coils of the spring.

The range for carburetters up to and including 1¾″ bore size is:— 2½ oz. blue. 4½ oz. red. 8 oz. yellow and 12 oz. green.

It is best to use the red spring but if the carburetters are suspected of being on the large size for an engine then the blue should be tried. Conversely if the instrument is only just large enough, a stronger yellow spring might be required.

A correct strength of piston spring will be one which allows the piston to reach its maximum travel at the point in the speed range where maximum power is obtained.

In the paper on the S.U. Carburetter given to the Institute of Mechanical Engineers by Mr. P. G. G. Knight, Technical Manager of S.U. Carburetter Co. Ltd., there is a description of a simple

piston height indicator which can be used whilst the vehicle is in motion. This device can be extremely useful in determining, both piston spring and needle profile by road test methods. (See footnote*)

It should be noted that the change from a medium spring (say the red) to a weaker one (blue), will have the effect of weakening the mixture throughout the range. The effect of going to a stronger one will be to enrich the mixture throughout the range.

A way of getting a rough guide as to which spring to use is to refer to the S.U. Leaflet AUC.9631. This lists carburetter specifications for both current and earlier models. Look down the list of vehicles and find a power unit which gives about the same power with the same number and size of carburetter fitted. This will give a piston spring/jet needle combination which can be used as a good starting point. See also appendix 1.

Carburetter air intake

The way by which the air reaches the carburetter intake can greatly affect the mixture requirements.

In addition to this manometer device Mr. Knight also refers to checking piston lift by means of a rod inserted in a hole drilled vertically through the suction chamber cap.

The rod is cut off flush with the top of the cap when piston is resting on the carburetter bridge and is therefore at its lowest point. As the piston rises, it carries the rod with it and a simple measurement reveals the extent of lift. A device of this type is actually available on the market—the PSW tool set, manufactured by PSW Test Equipment (P. M. Schleyer) of Western Germany, and imported into this country by Motor Books and Accessories, 33 St. Martins Court, St. Martin's Lane, London W.C.2. Sets are available for S.U. carburettors and for Strombergs, they cost 36s 6d. As well as piston lift, they permit immediate checks to be made of jet centralisation, synchronisation of twin carbs, mixture strength and fuel level.

Removal of an air cleaner system will tend to weaken the mixture supplied to the engine and the effect will be greater at the top end of the speed range.

The degree of weakening will depend upon the type of air cleaner and this will be governed by how much restriction the cleaner offers—the greater the restriction, the greater the weakening effect when removed. In general, oil bath type cleaners offer more restriction than the paper element types.

Fitting ram pipes to the intake flange of the carburetter(s) can also affect the mixture requirement (usually weakening the mixture slightly in the mid-speed range). The effect on power curve varies with type, and length.

There is no simple formula for ram pipe length, but in general a length of between 2 to 3 inches is used. The effect of these pipes is to boost power very slightly in the mid-speed range.

Jet needle profile.

Two leaflets which are obtainable from S.U. Carburetter Co. Ltd., or their agents, are extremely useful for jet needle determination; one is the Carburetter Specification booklet already mentioned and the other is the list of needle sizes (AUC.9618). See Appendix 2.

The book of needle sizes gives a list of diameters for each needle starting with the diameter immediately under the shank or head of the needle and working down the length in increments of one eighth of an inch. The smaller the dia-

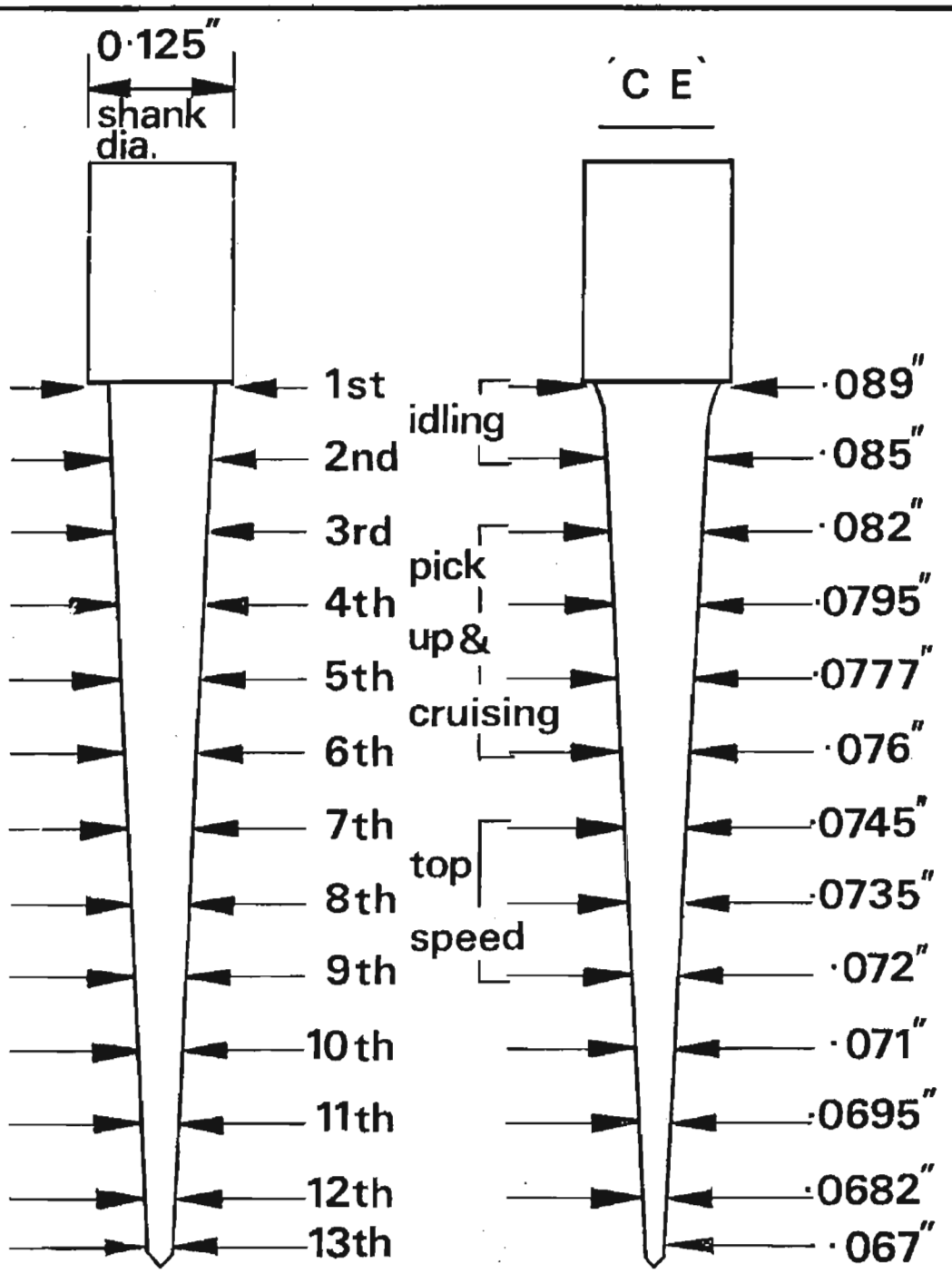

NB. The above bracketing applies for $1\frac{1}{4}$" (H2 or HS2) carburetters

meter at any particular point the richer the needle will be at that point.

To illustrate what the needle dimensions in the book actually represent we will take an example, (a diagram of this needle appears on page10)the CE, list the dimensions and discuss which part affects which driving condition.

Referring to diagram (1) the first two dimensions are given as 1). .089 2). .085: these are the idling or datum positions and it is advisable when changing from one needle to another to choose one with the same idling dimensions.

If this is not possible then bear in mind that if the new needle has weaker or larger idling dimensions (say .089–.0855) the rest of the needle will give slightly richer results than suggested by the dimensions.

If the idling dimensions are richer or smaller (say ·089–·0845) the needle will give slightly weaker results than one would expect. This is due to the alteration in the jet position required by the new idling dimensions.

The next four dimensions govern the pick up in top gear from about 20 m.p.h. to 50 m.p.h. These are 3) ·082 4) ·0795 5) ·0777 6) ·076 and are also the part of the needle which meters fuel for the part throttle or cruising conditions. A cruising speed of 30 m.p.h. will lie approximately (depending on size of carburetter) between the second and third dimensions on the diagram; a steady 50 m.p.h. will occur around the fifth portion. Dimensions from the seventh (·0745) to the ninth (·072) affect the top end full throttle conditions. The last three dimensions (with 1¼" diameter carburetters) do not take part in the metering.

Testing procedure

With the carburetter(s) correctly set for mixture at idle conditions (see S.U. Service Literature) and the engine oil and water at normal temperatures, carry out a number of acceleration tests and part throttle tests.

First accelerate from about 20 m.p.h. in top gear to about 50 m.p.h. If there is hesitation or a pulling back, repeat test with the choke pulled out about ⅝". If there is an improvement, make a note that the third, fourth and fifth, and possibly the sixth needle dimensions require to be a little richer. Now try driving at a steady 30, 40 and 50 m.p.h., if there is a slight see-sawing action, try to cure this by richening the mixture control slightly.

If weakness is suspected at these cruising speeds then again the third, fourth and fifth dimensions will require richening. A similar test can be carried out for high speed in top gear. Here it is very important to ensure that there is no weakness.

SECTION II

Adjusting and Servicing

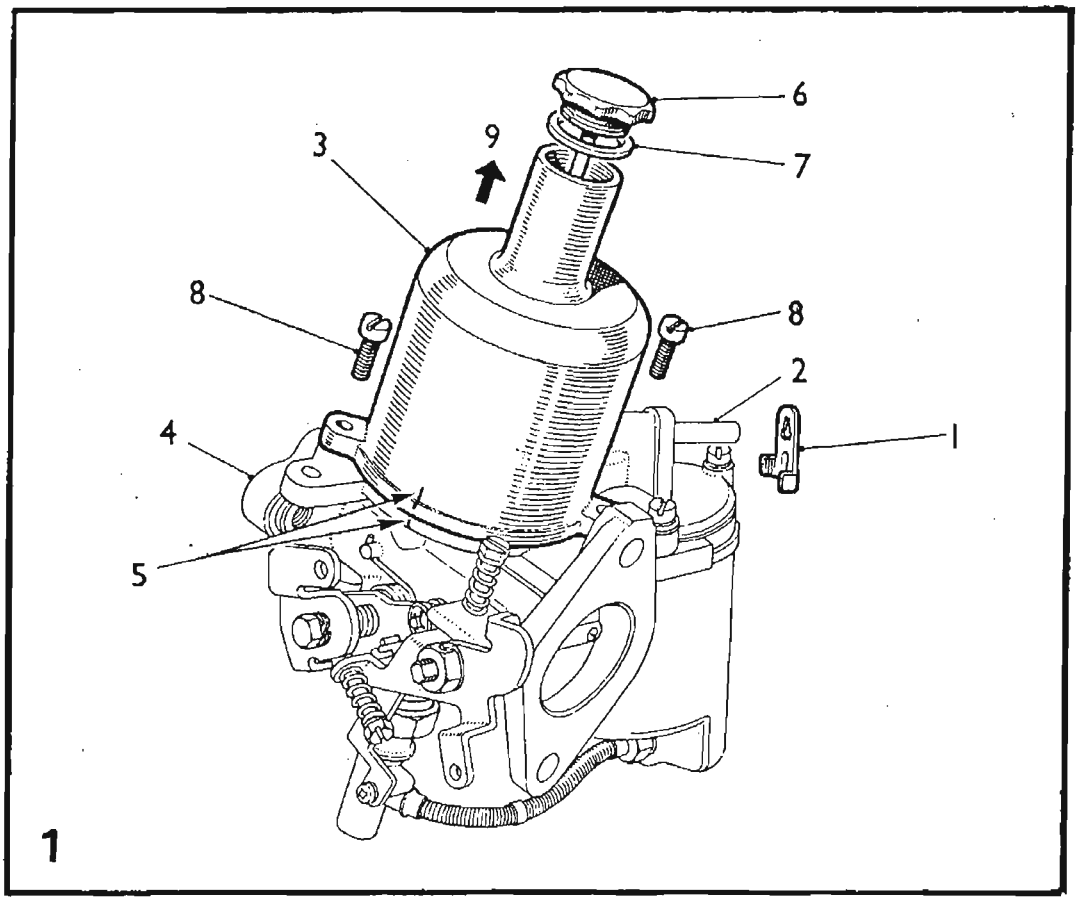

1

1. Baffle plate.
2. Inlet nozzle.
3. Suction chamber.
4. Carburetter body.
5. Marks for replacement.
6. Damper.
7. Damper washer.
8. Chamber retaining screws.
9. Direction of removal.

A. Remove the baffle plate from the inlet nozzle.
B. Thoroughly clean the outside of the carburetter.
C. Mark the relative positions of the suction chamber and the carburetter body.
D. Remove the damper and its washer. Unscrew the chamber retaining screws.
E. Lift off the chamber without tilting it.

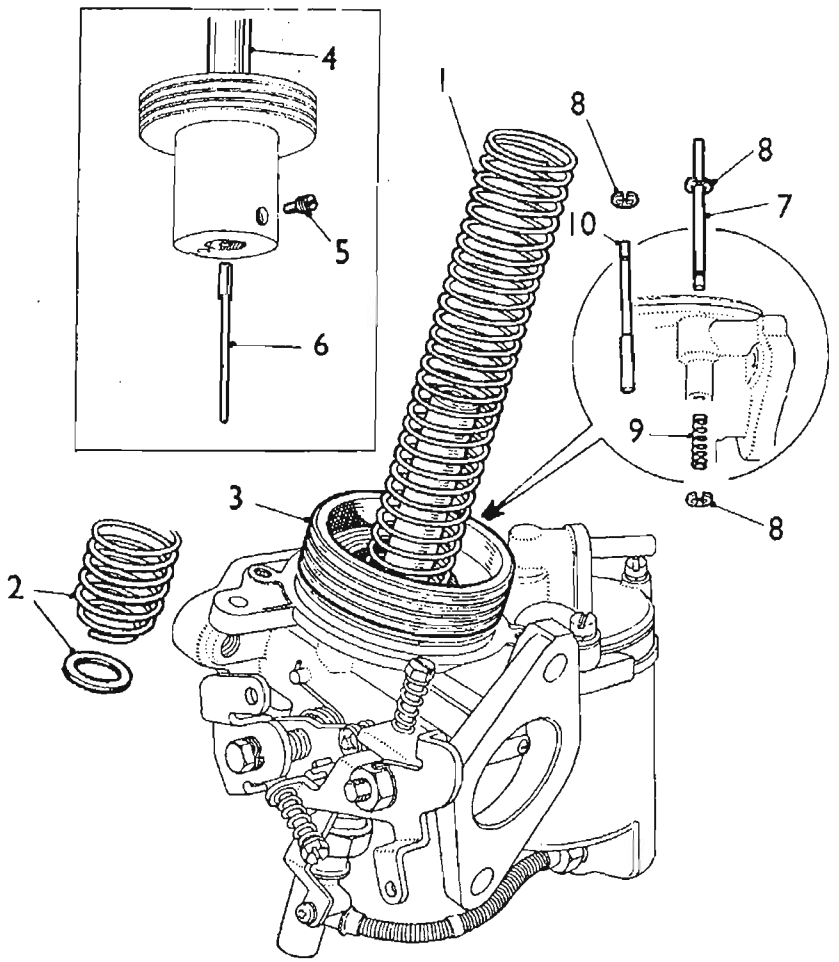

2

1. Piston spring.
2. Alternative spring with washer.
3. Piston assembly.
4. Piston rod.
5. Needle locking screw.
6. Needle.
7. Piston lifting pin.
8. Circlip for pin.
9. Spring for pin.
10. Alternative lifting pin.

A. Remove the piston spring and washer (when fitted).

B. Carefully lift out the piston assembly and empty the damper oil from the piston rod.

C. Remove the needle locking screw and withdraw the needle. If it cannot easily be removed, tap the needle inwards first and then pull outwards. Do not bend the needle.

D. If a piston lifting pin with an external spring is fitted, remove the spring retaining circlip and spring, then push the lifting pin upwards to remove it from its guide. With the concealed spring type, press the pin upwards, detach the circlip from its upper end, and withdraw the pin and spring downwards.

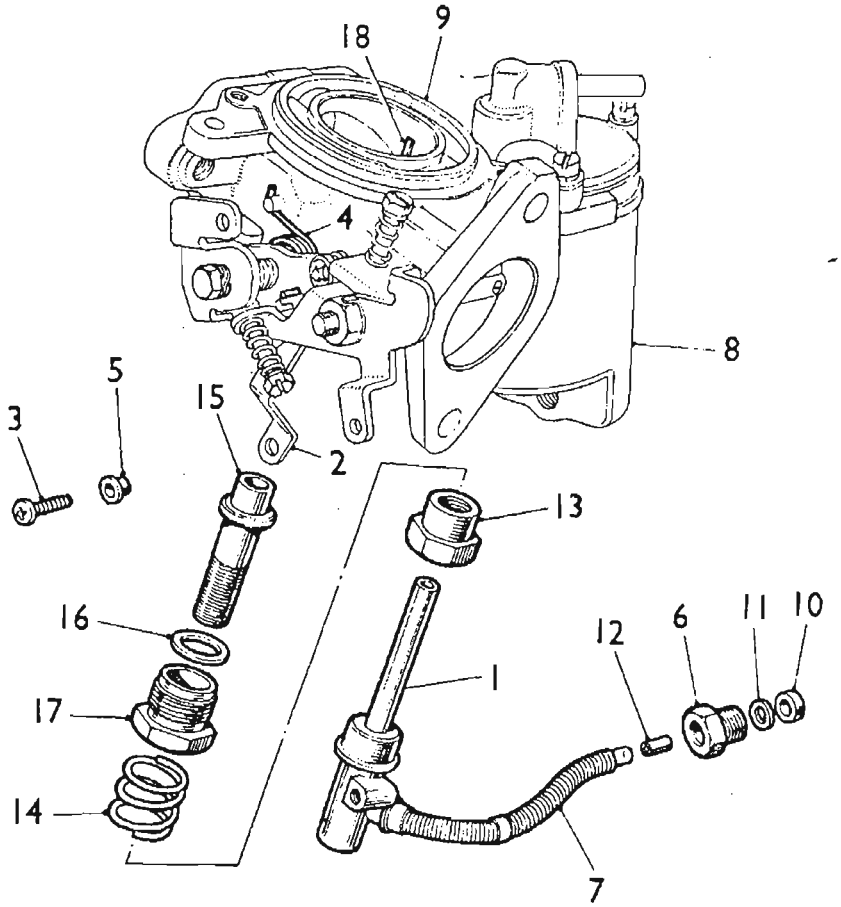

3

1. Jet assembly.
2. Pick-up link.
3. Link retaining screw.
4. Pick-up lever return spring.
5. Brass bush.
6. Sleeve nut.
7. Flexible jet tube.
8. Float-chamber.
9. Carburetter body.
10. Gland.
11. Washer.
12. Ferrule.
13. Jet adjusting nut.
14. Spring for nut.
15. Jet bearing.
16. Brass washer.
17. Jet locking nut.
18. Piston key.

A. Support the moulded base of the jet and slacken the screw retaining the jet pick-up link.

B. Relieve the tension of the pick-up lever return spring from the screw and remove screw and brass bush (when fitted).

C. Unscrew the brass sleeve nut retaining the flexible jet tube to the float-chamber and withdraw the jet assembly from the carburetter body. Note the gland, washer, and ferrule, at the end of the jet tube.

D. Remove the jet adjusting nut and screw. Unscrew the jet locking nut and detach the nut and jet bearing. Withdraw the bearing from the nut, noting the brass washer under the shoulder of the bearing.

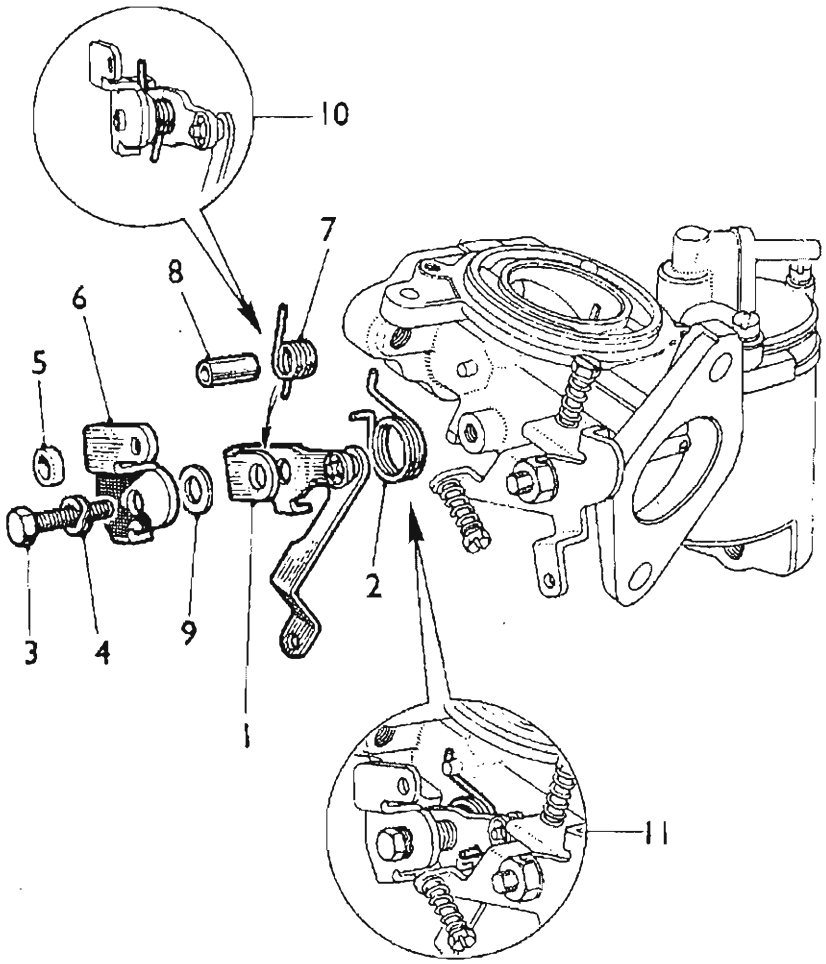

4

1. Pick-up lever.
2. Lever return spring.
3. Lever pivot bolt.
4. Double-coil spring washer.
5. Spacer (alternative).
6. Cam lever.
7. Lever spring.
8. Pivot bolt tube.
9. Skid washer.
10. Cam lever spring location.
11. Pick-up lever spring location.

A. Note the location points of the two ends of the pick-up lever return spring. Unscrew the lever pivot bolt together with its double-coil spring washer, or spacer. Detach the lever assembly and return spring.

B. Note the location of the two ends of the cam lever spring and push out the pivot bolt tube or tubes, taking care not to lose the spring. Lift off the cam lever, noting the skid washer between the two levers.

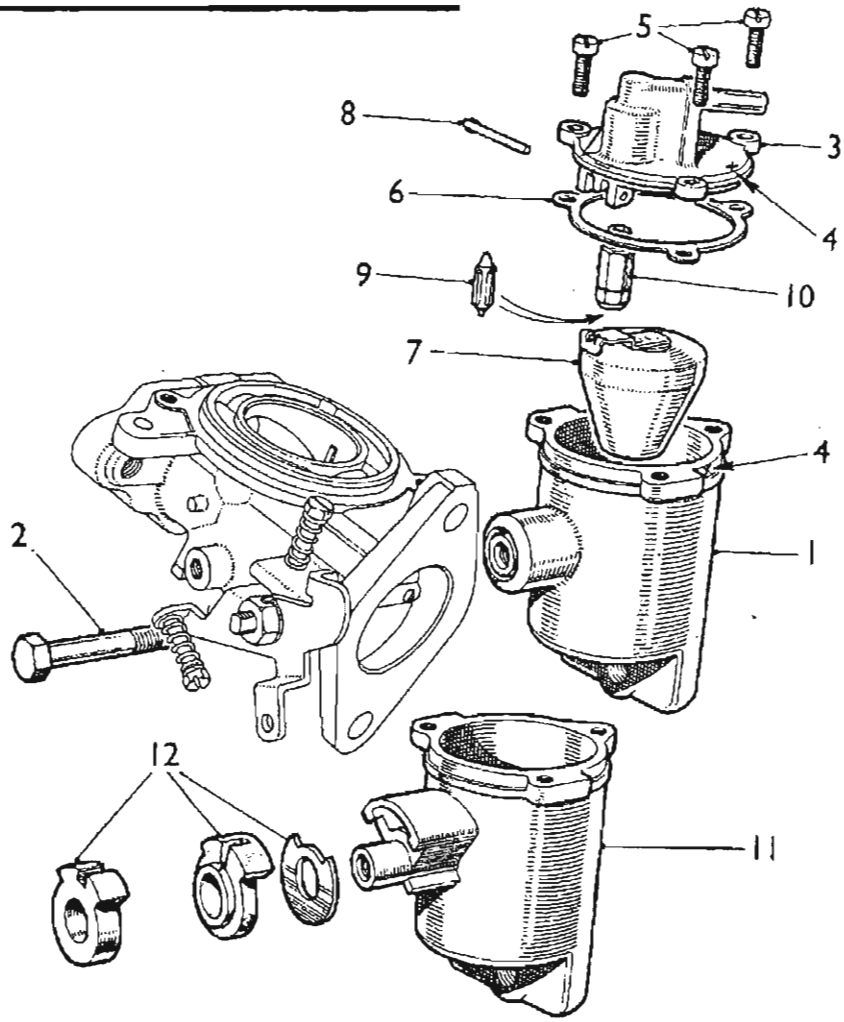

5

1. Float-chamber.
2. Retaining bolt.
3. Float-chamber lid.
4. Marks for replacement.
5. Lid retaining screws.
6. Lid gasket.
7. Float assembly.
8. Float hinge pin.
9. Float needle.
10. Needle seating.
11. Alternative float-chamber.
12. Alternative spacers.

A. Slacken and remove the bolt retaining the float-chamber to the carburetter body. Note the component sequence with flexibly mounted chambers.

B. Mark the location of the float-chamber lid. Unscrew the lid retaining screws and detach the lid and its gasket, complete with float assembly.

C. Push out the float hinge pin from the end opposite its serrations and detach the float.

D. Extract the float needle from its seating and unscrew the seating from the lid, using a box spanner ·338 in. (8·58 mm.) across the flats. Do not distort the seating.

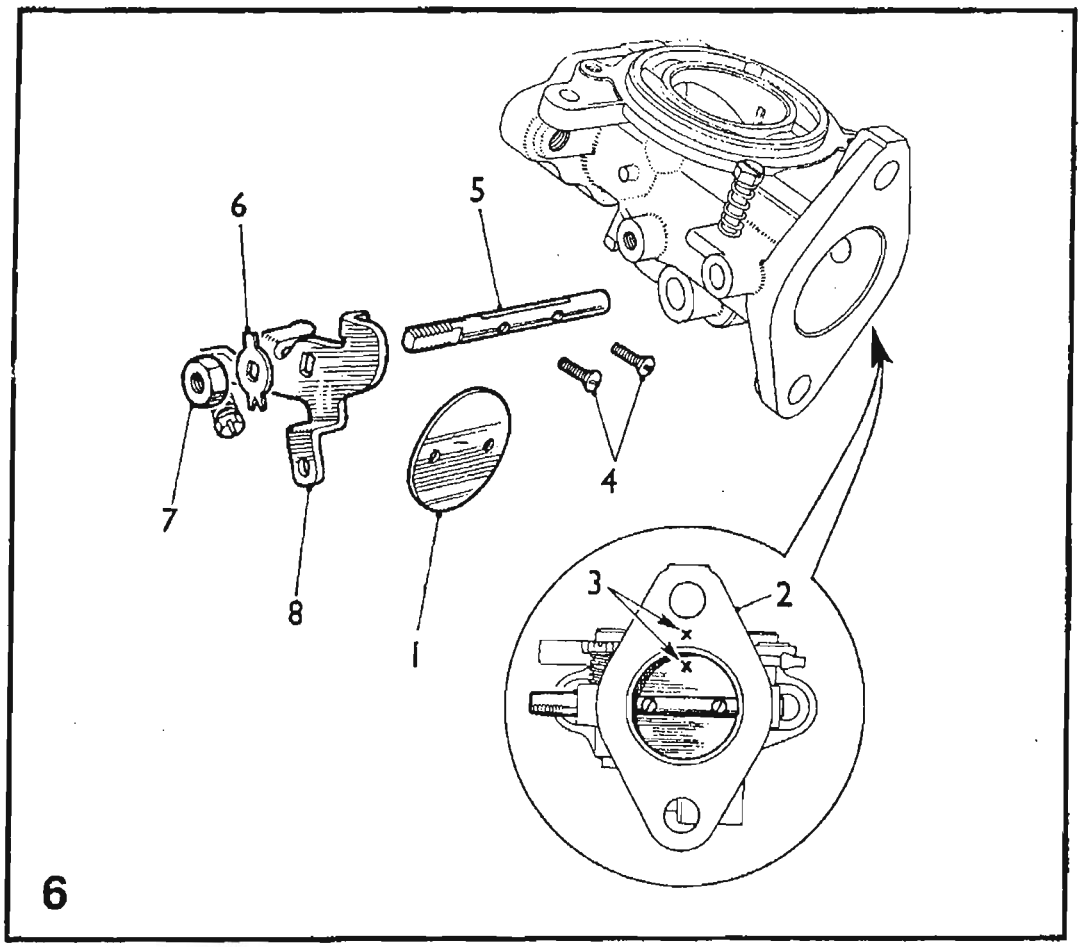

1. Throttle disc.
2. Carburetter flange.
3. Marks for replacement.
4. Disc retaining screws.
5. Throttle spindle.
6. Tab washer.
7. Spindle nut.
8. Lever arm.

A. Close the throttle and mark the relative positions of the throttle disc and the carburetter flange.

B. Unscrew the two disc retaining screws. Open the throttle and ease out the disc from its slot in the throttle spindle. The disc is oval and will jam if care is not taken.

C. Tap back the tabs of the tab washer securing the spindle nut. Note the location of the lever arm in relation to the spindle and carburetter body; remove the nut and detach the arm.

NOTE.—Before reassembling, examine all components for damage and/or wear. Unserviceable components must be renewed.

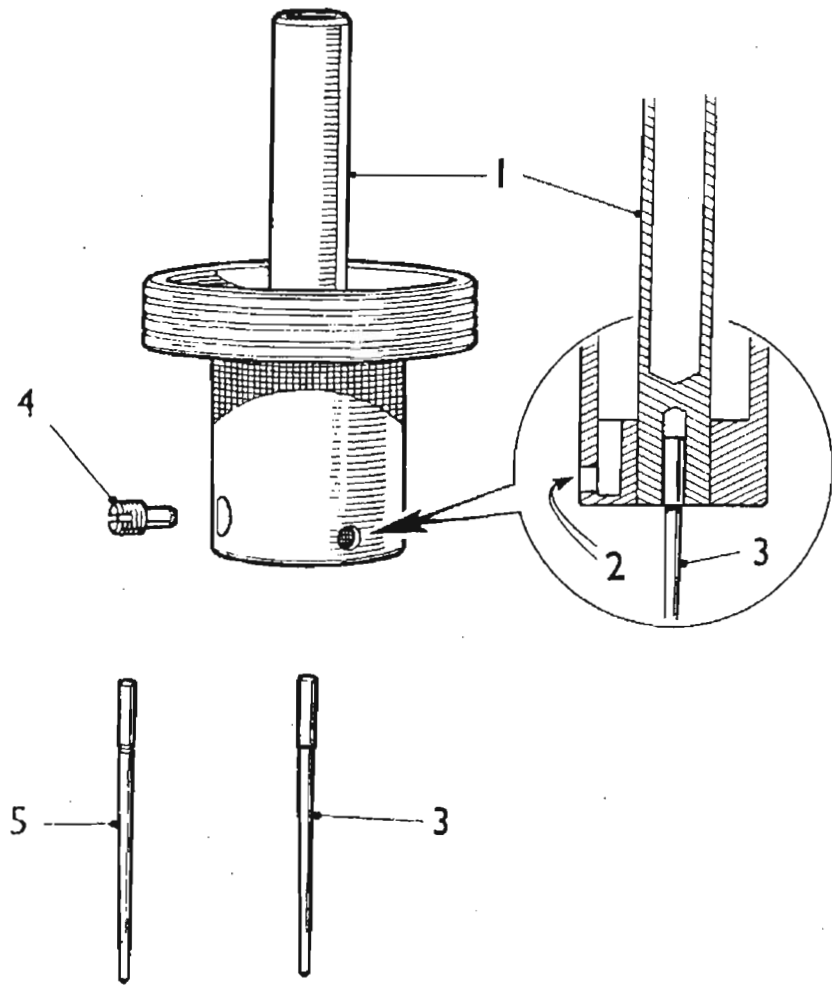

1. Piston rod.
2. Transfer holes.
3. Needle.
4. Needle locking screw.
5. Alternative needle.

7

A. Examine the throttle spindle and its bearings in the carburetter body. Check for excessive play. Renew parts as necessary.

B. Refit the spindle to the body. Assemble the operating lever with tab washer and spindle nut, to the spindle. Ensure that when the stop on the lever is against the abutment on the carburetter body, i.e. throttle closed position, the countersunk ends of the holes in the spindle face outwards. Tighten the spindle nut and lock with the tab washer.

C. Insert the throttle disc in the slot in the spindle in its original position as marked. Manœuvre the disc in its slot until the throttle can be closed and fit two new retaining screws, but do not fully tighten. Check visually that the disc closes fully, and adjust its position as necessary. With the throttle closed there must be clearance between the throttle lever and the carburetter body. Tighten the screws fully and spread their split ends just enough to prevent turning.

8

A. Examine the float needle and seating for damage. Check that the spring-loaded plunger in the end of the plastic-bodied needle operates freely.

B. Screw the seating into the float-chamber carefully. Do not overtighten. Replace the needle in the seating, coned end first. Test the assembly for leakage with air pressure.

C. Refit the float and lever to the lid and insert the hinge pin. Check the float level as described in item 15

D. Examine the lid gasket for re-use. Assemble the gasket on the lid and refit the lid to the float-chamber in the position marked on dismantling. Tighten the securing screws evenly.

E. Refit the float-chamber assembly to the carburetter body and tighten the retaining bolt fully, making sure that the registers on the body and the chamber engage correctly.

9

A. Refit the piston lifting pin, spring, and circlip.

B. Examine the piston assembly for damage on the piston rod and the outside surface of the piston. The piston assembly must be scrupulously clean. Use petrol or methylated spirit as a cleaning agent. **Do not use abrasives.** Lightly oil the outside of the piston rod.

C. Clean inside the suction chamber and piston rod guide using petrol or methylated spirit. Refit the damper assembly and washer. Seal the transfer holes in the piston assembly with rubber plugs or Plasticine and fit the assembly to the suction chamber. Invert the complete assembly and allow the suction chamber to fall away from the piston. Check the time this takes, which should be 3 to 5 seconds for HS2-type carburetters of 1¼

10

in. (31·75 mm.) bore, or 5 to 7 seconds for larger carburetters. If the time taken is in excess of that quoted, the cause will be thick oil on the piston rod, or an oil film on the piston or inside the suction chamber. Remove the oil from the points indicated and re-check.

D. Refit the needle to the piston assembly. The shoulder or lower edge of the groove must be level with the bottom face of the piston rod. Fit a new needle locking screw and tighten. Invert the suction chamber and spin the piston assembly inside it to check for concentricity of the needle.

E. Check the piston key for security in the carburetter body. Refit the piston assembly to the body and replace the piston spring over the piston rod. Fit the suction chamber and retaining screws. Tighten the screws evenly.

A. Refit the jet bearing, washer, and locking nut: do not tighten the nut. Refit the jet in its bearing and the flexible tube to the base of the float-chamber without the gland and washer.

B. Centralize the jet as described in item 13

C. Withdraw the jet and tube; refit the spring and jet adjusting nut. Fit the gland washer and ferrule to the flexible tube. The end of the tube should project a minimum of $\frac{3}{16}$ in. (4·8 mm.) beyond the gland. Refit the jet and tube. Tighten the sleeve nut until the neoprene gland is compressed. Overtightening can cause leakage.

D. Refit the damper and washer.

11

A. Reassemble the pick-up lever, cam lever, cam lever spring, skid washer, and pivot bolt tube or tubes in the positions noted on dismantling.

B. Place the pick-up lever return spring in position over its boss and secure the lever assembly to the carburetter body with the pivot bolt. Ensure that the double-coil spring washer or spacer fits over the projecting end of the pivot bolt tube.

C. Register the angled end of the return spring in the groove in the pick-up lever, and hook the other end of the spring around the moulded peg on the carburetter body.

D. Fit the brass ferrule to the hole in the end of the pick-up link. Relieve the tension of the return spring and fit the link to the jet with its retaining screw. When finally tightening the screw, support the moulded end of the jet.

E. Refit the baffle plate to the float-chamber lid nozzle.

12

JET CENTREING

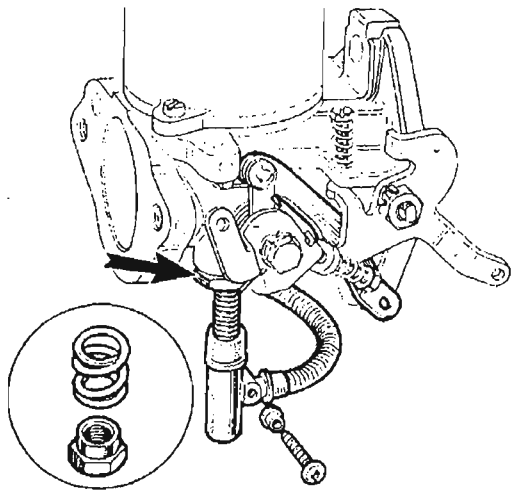

13

The piston should fall freely onto the carburetter bridge with a click when the lifting pin is released with the jet in the fully up position. If it will only do this with the jet lowered then the jet unit requires re-centring. This is done as follows:

A. Remove the jet head screw to release the control linkage.
B. Withdraw the jet, disconnecting the fuel feed pipe union in the float-chamber, and removing the rubber sealing washer. Remove the jet locking spring and adjusting nut.
C. Replace the jet and insert the fuel feed pipe connection into the float-chamber.
D. Slacken the **jet locking nut** until the assembly is free to rotate.

A. Remove the piston damper and apply pressure to the top of the piston rod with a pencil.
B. Tighten the **jet locking nut** keeping the jet hard up against the jet bearing.
C. Finally check again as in item 13.
D. Re-fit the jet locking spring and adjusting nut. Before replacing the fuel feed pipe into the float-chamber, fit the rubber sealing washer over the end of the plastic pipe so that at least $\frac{3}{16}$ in. (4·8 mm.) of pipe protrudes (see inset). Reassemble the controls.
E. Refill the piston dampers with the recommended engine oil (see Item 26).

14

Float-chamber fuel level

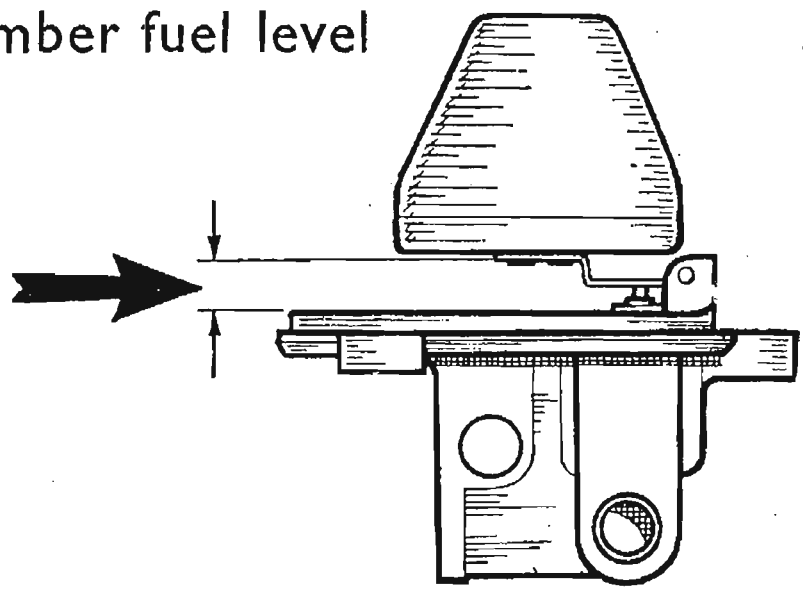

A. Remove and invert the float-chamber lid.
B. With the needle valve held in the shut-off position by the weight of the float only, there should be a $\frac{1}{8}$ to $\frac{3}{16}$ in. (3·2 to 4·8 mm.) gap between the float lever and the rim of the float-chamber lid.
C. The float may be set by bending at the crank.

15

ROUTINE CLEANING

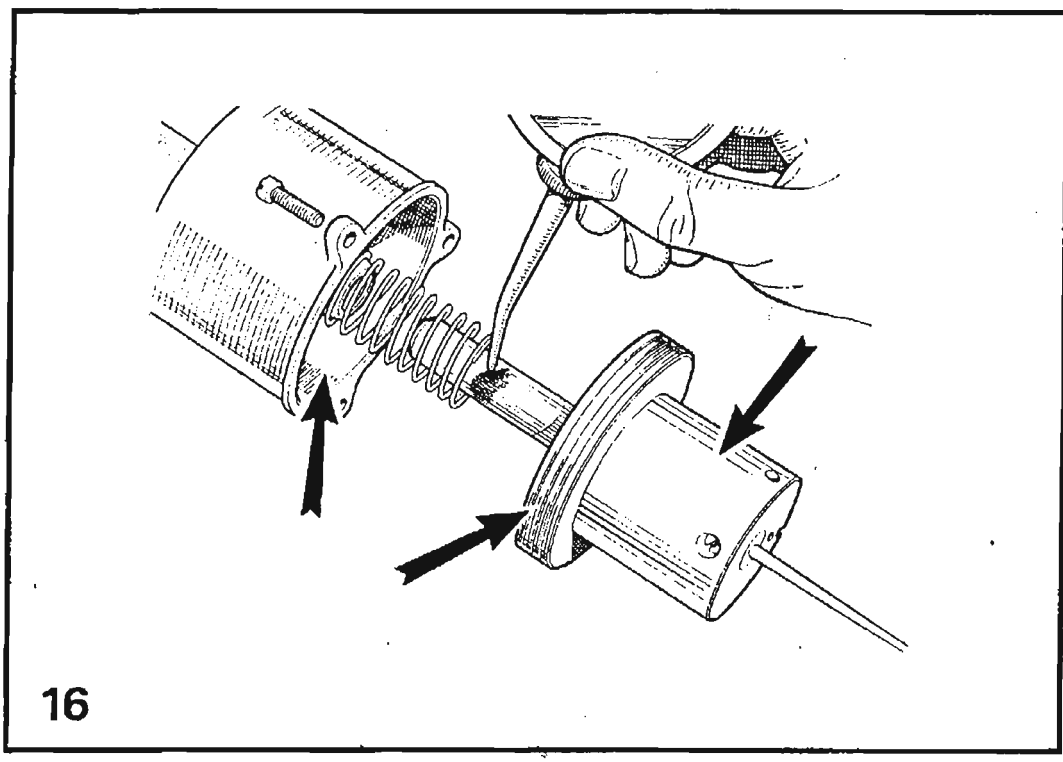

A. At the recommended Intervals mark for reassembly and carefully remove the piston/suction chamber unit.
B. Using a petrol-moistened cloth, clean the inside bore of the suction chamber and the two diameters of the piston.
C. Lightly oil the piston rod only and reassemble as marked.
D. Refill piston damper (see item 26)

SECTION III

Tuning Multi Carburetters

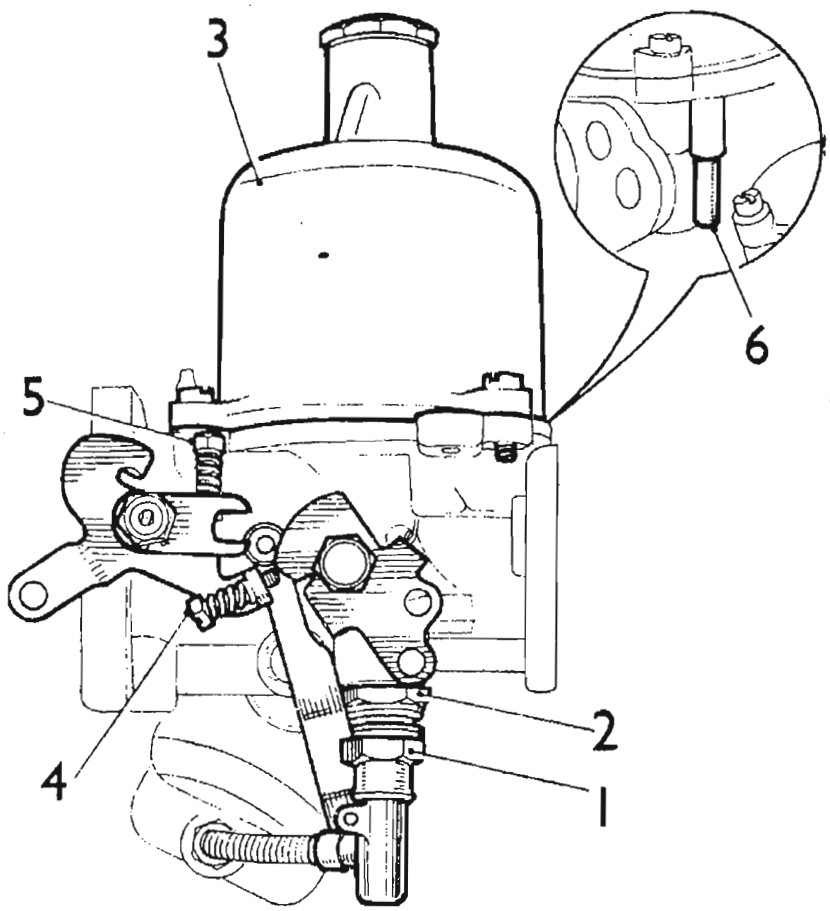

The Type HS Carburetter

1. Jet adjusting nut.
2. Jet locking nut.
3. Piston/suction chamber.
4. Fast-idle adjusting screw.
5. Throttle adjusting screw.
6. Piston lifting pin.

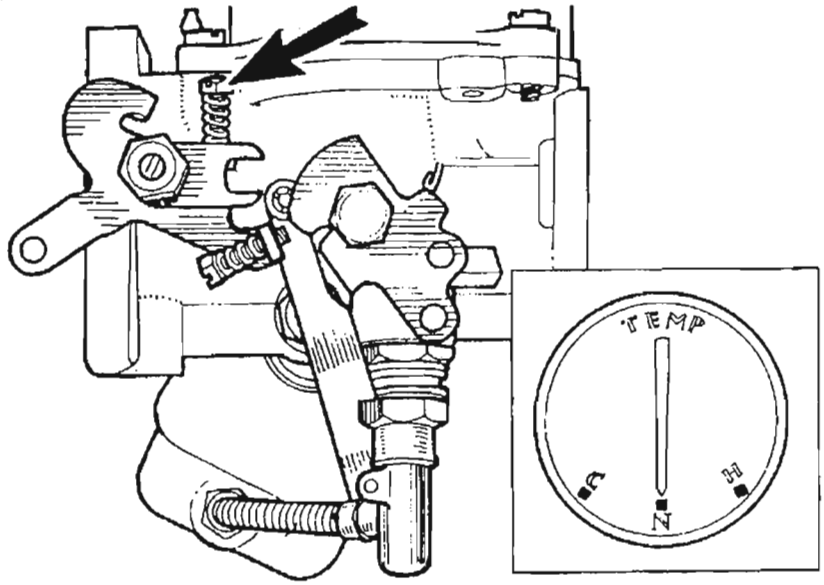

A Warm engine up to normal temperature.
B. Switch off engine.
C. Unscrew the throttle adjusting screw until it is just clear of its stop and the throttle is closed.

17 D. Set each throttle adjusting screw ¼ of a turn open.

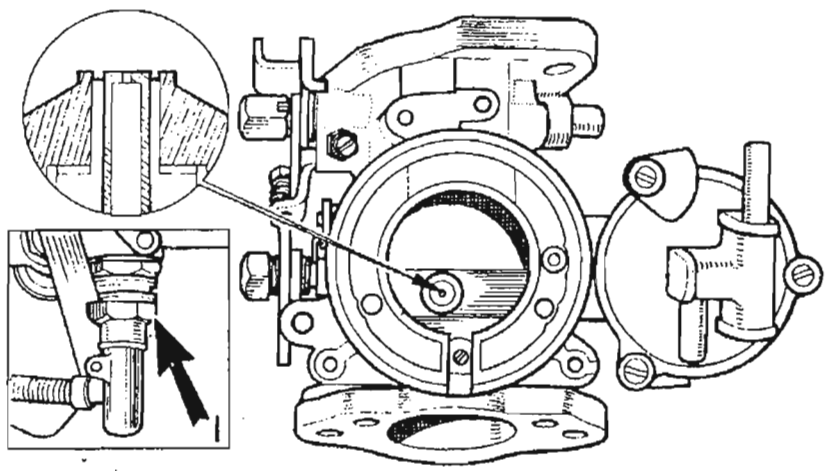

A. Mark for reassembly and remove piston/suction chamber unit.
B. Disconnect mixture control wire.
C. Screw the jet adjusting nut (1) until the jet is flush with the bridge of the carburetter or fully up if this position cannot be obtained.
D. Replace the piston/suction chamber unit as marked.
E. Turn down the jet adjusting nut (1) two complete turns. 18

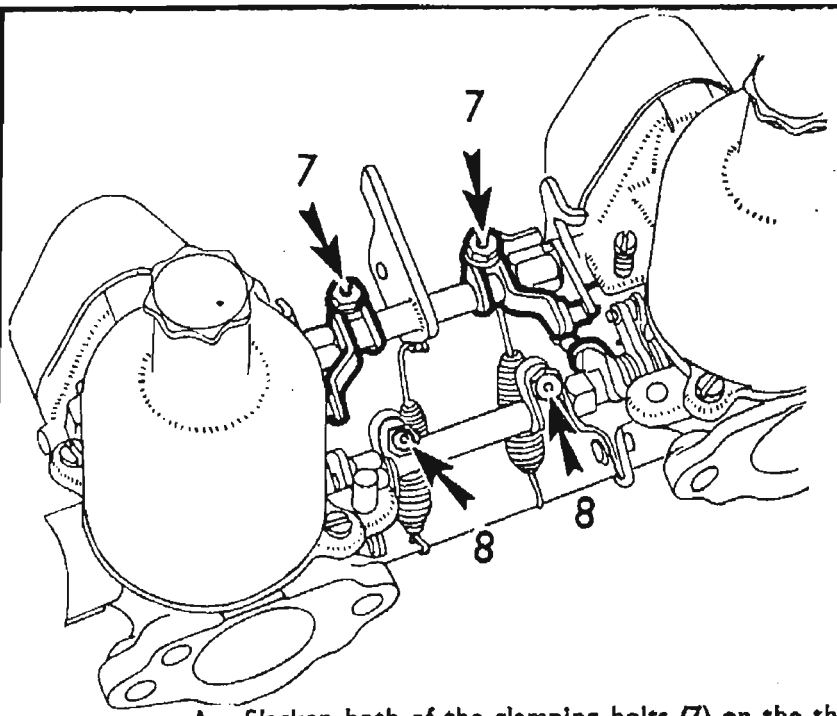

A. Slacken both of the clamping bolts (7) on the throttle spindle interconnections.

B. Disconnect the jet control interconnection by slackening the clamping bolts (8).

19

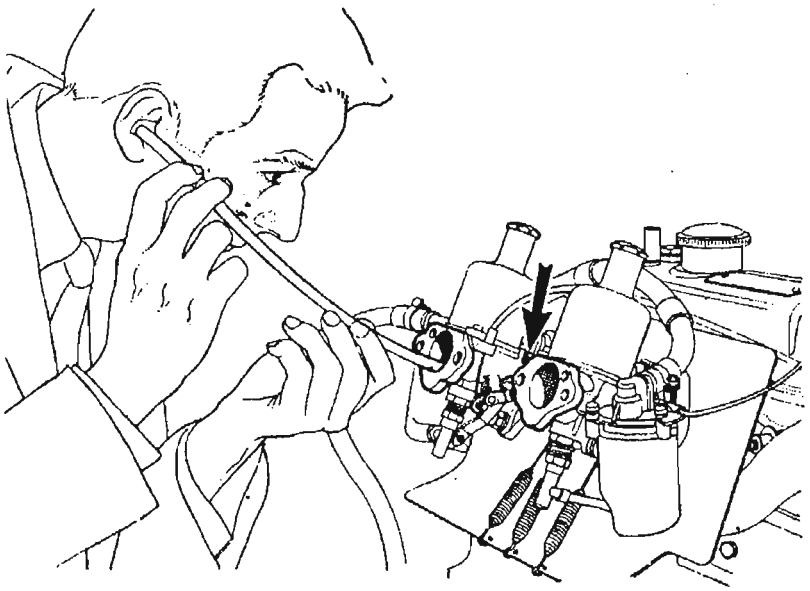

A. Restart the engine and adjust the throttle adjusting screws on each carburetter to give the desired idling speed as indicated by the glow of the ignition warning light.

B. Compare the intensity of the intake 'hiss' on all carburetters and alter the throttle adjusting screws until the 'hiss' is the same.

20

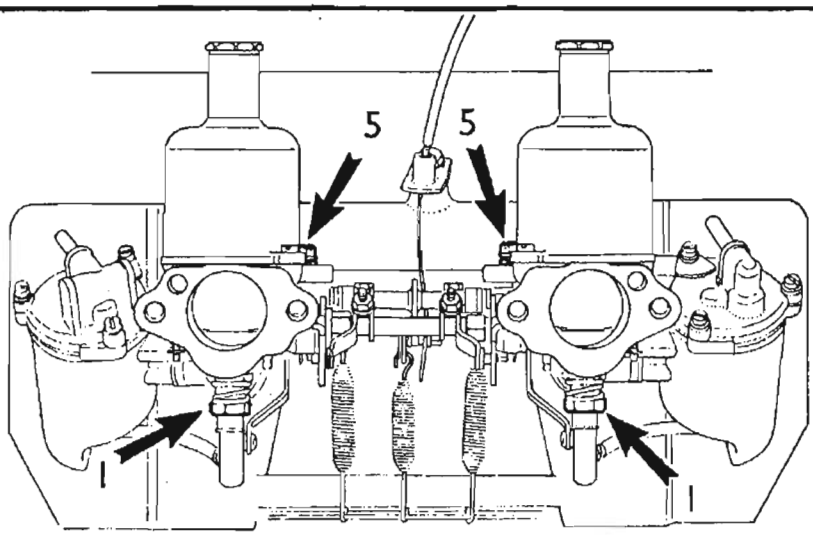

21

A. Turn the jet adjusting nuts (1) on all carburetters up to weaken or down to richen the same amount until the fastest idling speed consistent with even running is obtained.

B. Readjust the throttle adjusting screws (5) to give correct idling if necessary.

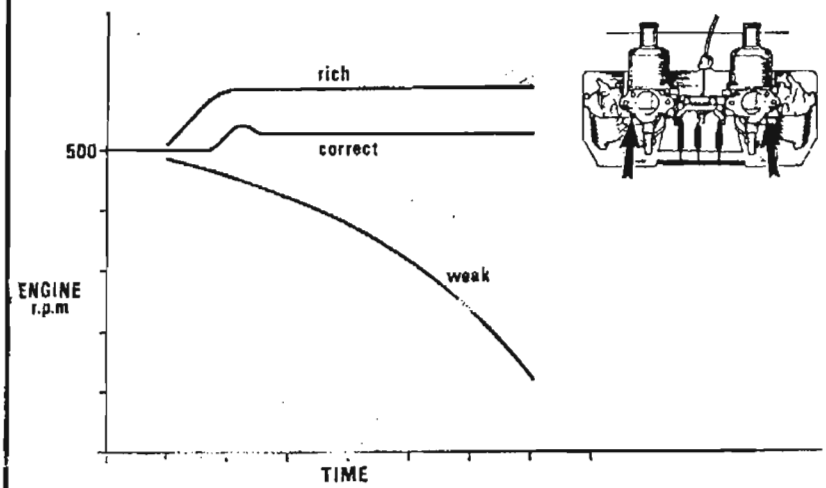

22

A. Check for correct mixture by gently pushing the lifting pin of the *front* carburetter up $\frac{1}{32}$ in. (·8 mm.) after free movement has been taken up. The graph illustrates the possible effect on engine r.p.m. Readjust the mixture strength if necessary.

B. Repeat the operation on the other carburetters and after adjustment re-check since they are all inter-dependent.

C. Item 25. shows the correct type of exhaust smoke.

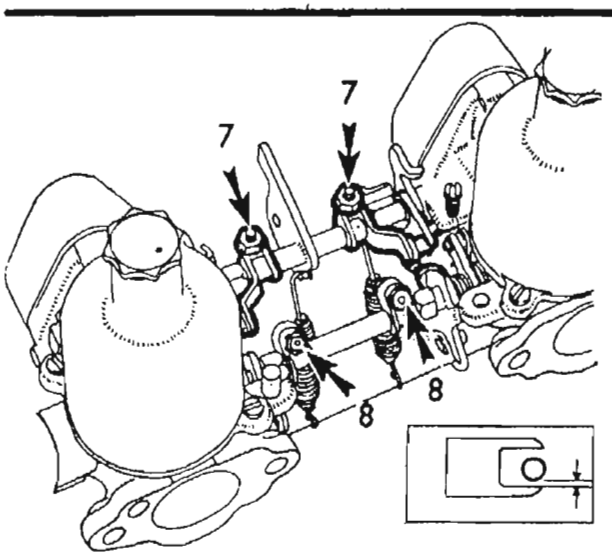

23

A. Set the throttle interconnection clamping levers (7) so that the link pin is ·012 in. (·30 mm.) away from the lower edge of the fork (see inset). Tighten the clamp bolts.

B. With both jet levers at their lowest position, set the jet interconnection lever clamp bolts (8) so that both jets commence to move simultaneously.

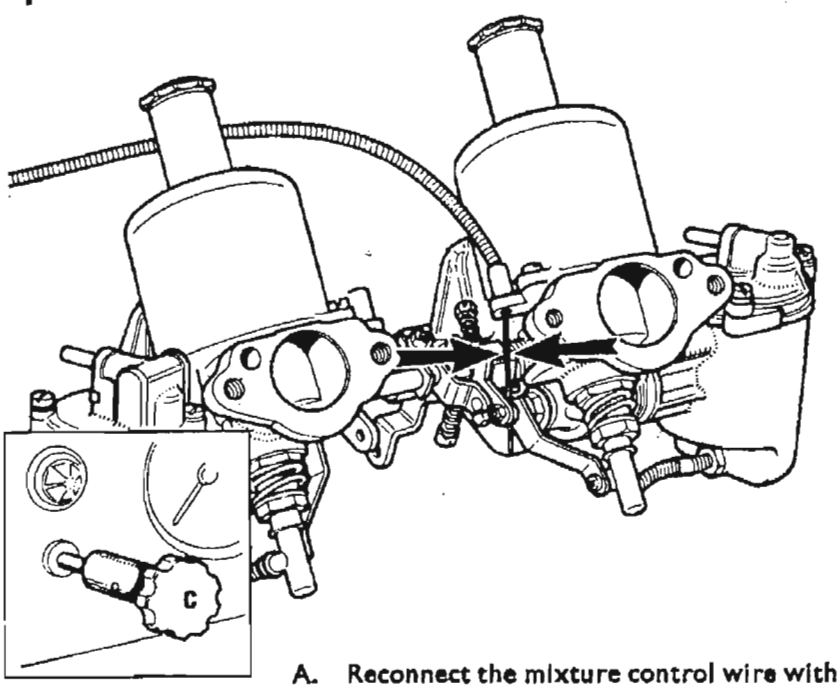

24

A. Reconnect the mixture control wire with about $\frac{1}{16}$ in. (1·6 mm.) free movement before it starts to pull on the jet levers.

B. Pull the mixture control knob until the linkage is about to move the carburetter jets, and adjust the fast idle screws, comparing the intensity of the air intake 'hiss' to give an engine speed of about 1,000 r.p.m. when hot.

C. Refit the air cleaners.

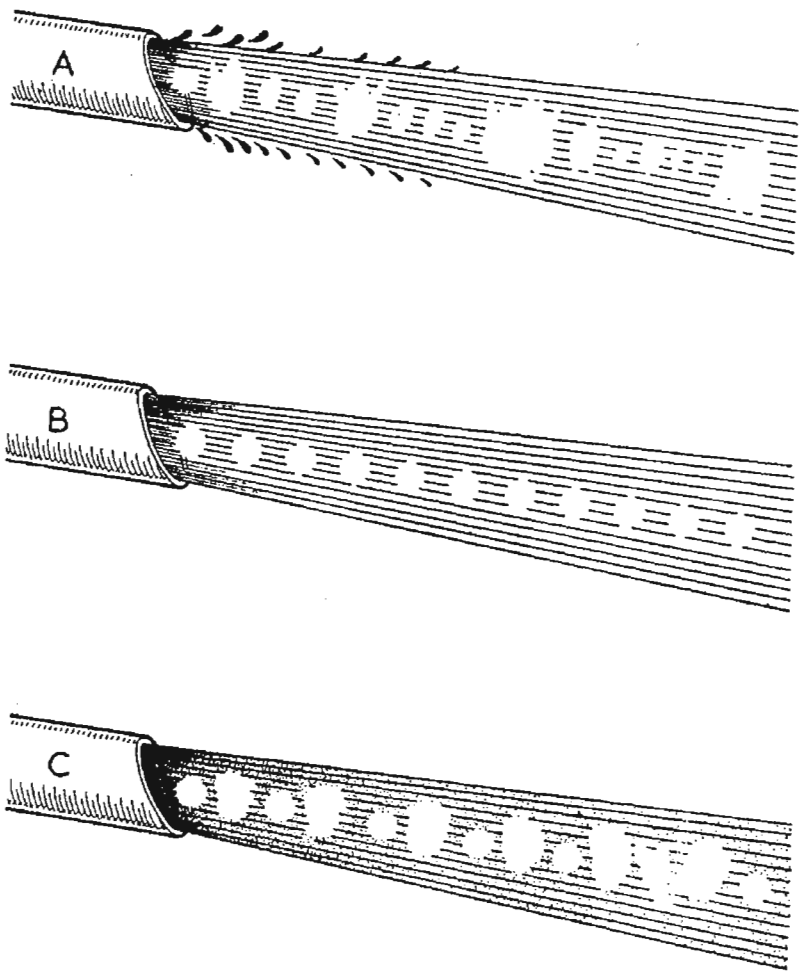

25

The effect of mixture strength on exhaust smoke

A. TOO WEAK: Irregular note, splashy misfire, and colourless.
B. CORRECT: Regular and even note.
C. TOO RICH: Regular or rhythmical misfire, blackish.

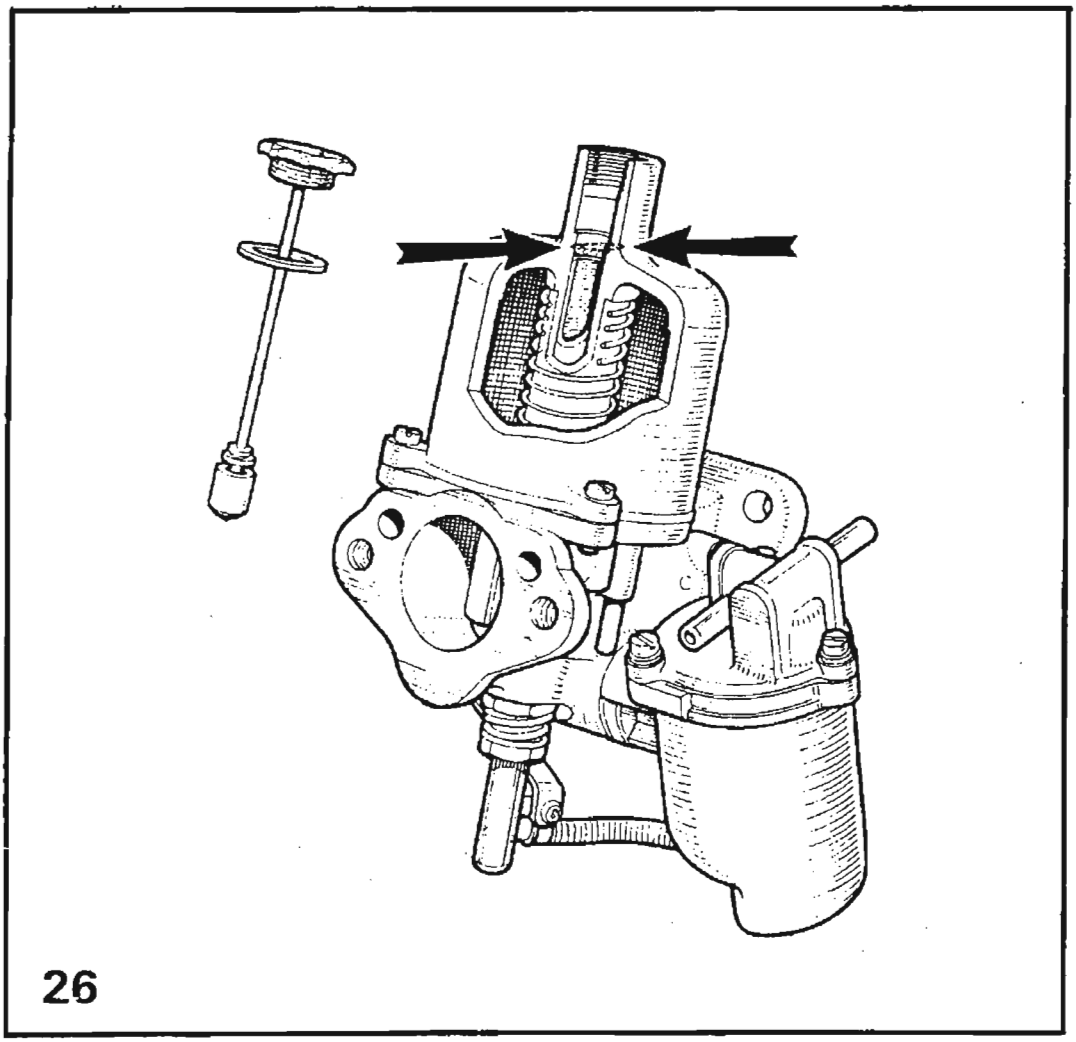

26

Finally top up the piston damper with the recommended engine oil until the level is ½ in. (13 mm.) **above** the top of the hollow piston rod.

Note

On dust-proofed carburetters, identified by a transverse hole drilled in the neck of the suction chambers and no vent hole in the damper cap, the oil level should be ½ in. (13 mm.) **below** the top of the hollow piston rod.

S.U. carburetter specifications Appendix 1

	CAR MODEL	YEAR	TYPE No.	NEEDLE RICH	NEEDLE STD.	NEEDLE WK.	SPRING COLOUR
AUSTIN HEALEY							
2963 c.c.	Austin-Healey 100 BN2	1953/6	Pair H4	QA	QW	AT	Yellow
	Austin-Healey Le Mans	1954/6	Pair H6	OA6	OA7	OA8	Red
	Austin-Healey 100 S	1955	Pair H6	KW	KWI	SA	Red
2639 c.c.	Austin-Healey 100/6 BN4	1957	Pair H4	4	AJ	MI	Red
2912 c.c.	Austin-Healey BN6 3000 (Mk. I)	1959	Pair HD6	RD	CV	SQ	Yellow
	Austin-Healey BN7	1959	Pair HD6	RD	CV	SQ	Green
	Austin-Healey BN7	1959	Pair HD6 Thermo	RD	CV	SQ	Green
	Austin-Healey BN7 (RC)	1960	Pair HD6	RD	CV	SQ	Green
2912 c.c.	Austin-Healey BN7 (Mk. II)	1961/2	Three HS4	DK	DJ	DH	Red
2912 c.c.	Austin-Healey 3000 (Mk. II)	1962/3	Pair HS6	RD	BC	TZ	Green
2912 c.c.	Austin-Healey BJ8 (Mk. III)	1964	Pair HD8	UN	UH	UL	Red/Green
AUSTIN 948 c.c.	Sprite	1959	Pair H1	EB	GG	MOW	
2912 c.c.	A 99	1959/61	Pair H4		M5	HA	Yellow
848 c.c.	Seven (Mini)	1959	Single HS2	M	EB	GG	Red
848 c.c.	Seven and Super	1961/2	Single HS2	M	EB	GG	Red
997 c.c.	Mini-Cooper	1961/2	Pair HS2	AH2	GZ	EB	Red
1622 c.c.	A 60	1961/4	Single HS2	M	GX	GG	Yellow
948 c.c.	A 40	1961/2	Single HS2	AH2	M	EB	Red
948 c.c.	Healey Sprite (Mk. II)	1961/2	Pair HS2	V2	V3	GX	Blue
1098 c.c.	Healey Sprite (Mk. II)	1962/3	Pair HS2	M	GY	GG	Blue
1098 c.c.	Healey Sprite (Mk. III)	1963/4	Pair HS2	H6	AN	GG	Blue
1275 c.c.	Healey Sprite (Mk. IV)	1966	Pair HS2	H6	AN	GG	Blue
948 c.c.	A 35 Van	1962/3	Single HS2	H6	AN	EB	Red
1098 c.c.	A 40 and Austin 1100	1962/4	Single HS2	H6	AN	EB	Red
1070 c.c.	Mini-Cooper S	1963/4	Pair HS2	3	H6	EB	Red
1275 c.c.	Mini-Cooper S	1964	Pair HS2	AH2	M	EB	Red
970 c.c.	Mini-Cooper S	1964	Pair HS2	H6	AN	EB	Red
998 c.c.	Mini-Cooper	1964	Pair HS2	M	GY	GG	Blue
1800 c.c.	Austin 1800	1964	Single HS6	SW	TW	CIW	Yellow
948 c.c.	A 35 Van	1965/6	Single HS2	M	EB	GG	Red
850 c.c.	Mini Automatic	1965/6	Single HS4	H6	AN	EB	Red
1098 c.c.	1100 Automatic	1965/6	Single HS4	BG	DL	ED	Red
1800 c.c.	1800	1966	Single HS6	SW	TW	CIW	Yellow

Appendix 1 contd

	CAR MODEL	YEAR	TYPE No.	NEEDLE RICH	NEEDLE STD.	NEEDLE WK.	SPRING COLOUR
CONVERSION SETS							
	M.G.—Elva	1959/61	Pair H4		GS		Red
	B.M.C. A Series—Turner	1959/61	Pair H1		BXI		
	Minor 1000—Speedwell	1959/61	Pair H2		M8		Blue
	B.M.C. A Series—Turner	1959/61	Pair H2		M6		Red
	Sprite-Sebring	1960	Pair H2		GX		Blue
	F2 Cooper Climax S/C	1960	Single H8				
	B.M.C.—FJ Cooper	1960	Pair H4		AM		Blue
948 c.c.	Alexander Herald	1960/1	Pair H2		M6		Blue
948 c.c.	Sprite	1960	Pair H4		A5		Blue
	Mangoletsi Remix	1961/3	Pair HI		M8		
	Healey 3000 Competition	1961	Three HD8		UH		Blue/Black
997 c.c.	Mini Cooper (Thermo jets)	1961/3	Pair H4		MME		Blue
	Sprite—Speedwell	1962/3	Pair H4		AO		Red
	Mini competition	1962/3	Pair H4		MME		Blue
970 c.c.	Mini-Cooper S Group 2	1964	Pair H4		CP4		Blue
1070 c.c.	Mini-Cooper S Group 2	1964	Pair H4		MME		Blue
1275 c.c.	Mini-Cooper S Group 2	1964	Pair H4		BG		Blue
	Formula 3 B.M.C.-Cooper	1964	Single HS6		SS		Red
1098 c.c.	Morris 1100 (Downton)	1964	Pair H4		AM		Blue
COVENTRY CLIMAX							
1100 c.c.		1954/8	Pair H4	R6	BE	6	Blue
	F.W.A. Stage I		Pair H4		BE		Blue
	F.W.A. Stage II		Pair H4		BF		Blue
1220 c.c.	Lotus Elite		Pair H4		BQ		Blue
1220 c.c.	Lotus Elite		Single H4		BF		Yellow
1500 c.c.	F.P.F.		Pair DU6		ZB		
FORD (CONVERSIONS)							
1172 c.c.	E93A	1949/53	Pair HV1	M9	EK	MOW	
1172 c.c.	100E Aquasport	1953/7	Pair MC2	MI	A5	HA	Red
1172 c.c.	100E Prefect and Anglia	1953	Pair H1		M6		
1172 c.c.	100E Lotus	1954/60	Pair H2	M5	M6	M7	Red

	CAR MODEL	YEAR	TYPE No.	NEEDLE RICH	NEEDLE STD.	NEEDLE WK.	SPRING COLOUR
FORD	**(CONVERSIONS)**						
	Consul—Aquaplane (Series 1)	1954/7	Pair H4	4	3	L	Red
	Consult—W.H.M.B. Ltd.	1955/7	Pair H2	H2	QA	QW	Red
	Zephyr—Aquaplane (Series 1)	1954/7	Three H4	4	3	L	Red/Centre Yellow front and rear
	Zephyr—W.H.M.B. Ltd.	1955/7	Three H2	EM	ES	AP	Red
	Zephyr—Raymond Mays (Series 1)	1954/6	Pair H4	CN	5	GE	Yellow
	Zephyr—Raymond Mays (Series 2)	1957/62	Pair H4	MME	7	AO	Yellow
	Consul—R. Owen (Series 2) 4 port head	1958/60	Single H6		RB		Red
	Consul—R. Owen (Series 2) 6 port head	1958/60	Pair H6		RB		Red
	105E FJ	1060/2	Pair H4		AM		Blue
	100E Aquaplane	1960/2	Pair H2		GX		Blue
	105E/107E Aquaplane	1960/2	Pair H2		A5		Blue
	Consul—R. Owen (Series 2) 4 port head	1962	Single H6		RB		Red
	Zephyr—Raymond Mays	1962	Pair H4		AY		Yellow
	E93A—Dellow	1950	Single HV3		RLS		Red
	Consul (Series 1)—Dellow	1953	Pair H2		M5		Red
	Zephry (Series 1)—Dellow	1954	Three H2		M5		Red
	100E Prefect and Anglia—Dellow	1955	Pair H1	M9	EK	MOW	
30 h.p.	V.8 (Special adaptor)	1950	Pair H4	RO	6		Red
	Consul (Series 1)	1952	Pair H4 DD		61		Yellow
	Consul (Series 1)	1953	Pair H2 DD		62		Yellow
	Zephyr (Series 1)	1953	Three H2 DD		WX		Yellow
	Lotus 105E	1961/2	Pair H2		A5		Blue
	Turner/Classic	1961/2	Single HS4		DJ		Red
	Reliant Ford	1962/3	Pair HS4		CZ		Red
	Reliant Zephyr 4	1963/4	Pair HS4		DH		Red
	Formula 3 (Holbay-Ford)	1964	Single HS6		UVP		Red

Appendix 1 contd

	CAR MODEL	YEAR	TYPE No.	NEEDLE RICH	NEEDLE STD.	NEEDLE WK.	SPRING COLOUR
HILLMAN							
875 c.c.	Imp (Conversion)	1964	Pair HS2		H4		Blue
1600 c.c.	Minx (Conversion)	1964	Pair H4		QA		Red
1390 c.c.	Minx (Conversion)	1956/8	Pair H2	CU	CZ	CF	Blue
	Alexander Minx (Conversion)	1959/61	Pair H2		GR		Blue
JAGUAR							
	XK 120	1949/50	Pair H6 Thermo		RB		Red
	XK 120	1951/4	Pair H6 Thermo	53	RF	RG	Red
	XK 120 (Remote air cleaner)	1951/4	Pair H6 Thermo	WO4	WO2	WO3	Red
	XK 120 7:1 and 8:1 C.R.C. Type	1952	Pair H8	75	VR	VE	Black/Red
	XK 120 8:1 C.R.C. Type	1952	Pair H6 Thermo		RG		Red
	XK 120 8:1 C.R. (Remote air cleaner)	1952	Pair H6 Thermo		DG		Red
	XK 120 9:1 C.R.C. Type	1952	Pair H6 Thermo		RC		Red
	XK 140 7:1 and 8:1 C.R.	1954	Pair H6 Thermo	SA	SJ	LBA	Red
	XK 130 C 7:1 and 8:1 C.R. (C Type head)	1954	Pair H6 Thermo		SR		Red
	XK 140C 7:1 and 8:1 C.R. (C Type Head) disc air cleaners	1954	Pair H6 Thermo		WO2		Red
	XK 140C 8:1 and 9:1 C.R. (C head)	1954	Pair H8	75	VR	VE	Black/Red
	XK140C 7:1 and 8:1 C.R. D/H Coupé and standard	1955	Pair H6 Thermo		WO2		Red
	XK 140C 7:1 and 8:1 C.R. R.H.D. F/H Coupé	1955	Pair H6 Thermo		WO2		Red
	XK 140C 7:1 and 8:1 C.R. L.H.D. F/H Coupé	1955	Pair H6 Thermo		WO2		Red
	XK 140 7:1 and 8:1 C.R. L.H.D. F/H Coupé	1955	Pair H6 Thermo	SA	SJ	LBA	Red
	XK 140 7:1 and 8:1 C.R. R.H.D. F/H Coupé	1955	Pair H6 Thermo	SA	SJ	LBA	Red
	XK 140 7:1 and 8:1 C.R. Borg-Warner	1955	Pair H6 Thermo	SA	SJ	LBA	Red
	XK 140 7:1 and 8:1 C.R Borg-Warner R.H.D. F/H Coupé	1956	Pair H6 Thermo	SA	SJ	LBA	Red
	XK 140 7:1 and 8:1 C.R. Borg-Warner L.H.D. D/H Coupé	1956	Pair H6 Thermo	SA	SJ	LBA	Red
	XK 140 7:1 and 8:1 C.R. Borg-Warner R.H.D. D/H Coupé	1956	Pair H6 Thermo	SA	SJ	LBA	Red
3·4 litre	XK 150 S	1959/62	Three HD8 Thermo		UE		Blue/Black
	XK 150	1959	Pair HD6 Thermo	WO3	TL	SJ	Red
3·4 litre	XK 150	1960/2	Pair HD6 Thermo	WO3	TL	SJ	Red
3·8 litre	XK 150	1960/2	Pair HD6 Thermo		TU		Red
3·8 litre	E Type	1961/4	Three HD8		UM		Blue/Black
4·2 litre	E Type	1965	Three HD8		UM		Blue/Black

	CAR MODEL	YEAR	TYPE & No.	NEEDLE RICH	NEEDLE STD.	NEEDLE WK.	SPRING COLOUR
M.G.							
1250 c.c.	TF (and 1·5 litre)	1954/5	Pair H4	HI	GJ	GL	Blue
	ZA Magnette	1954/5	Pair H2	M	GM	GO	Red
1500 c.c.	MGA	1955/9	Pair H4	CC	GS	4	Red
	ZA/ZB Magnette	1956/8	Pair H4		EQ	M5	Red
1588 c.c.	Twin Cam	1958	Pair H6	RH	OA6	OA7	Red
	Magnette III	1959/61	Pair HD4	FT	FU	M9	Red
1588 c.c.	MGA (Marks I and II)	1959/62	Pair H4	RO	6	AO	Red
1622 c.c.	Magnette (Mk. IV)	1961/3	Pair HD4	FU	HB	FK	Red
948 c.c.	Midget	1961/2	Pair HS2	V2	V3	GX	Blue
1098 c.c.	1100	1962/3	Pair HS2	D6	D3	GV	Blue
1098 c.c.	Midget.	1962/3	Pair HS2	M	GY	GG	Blue
1800 c.c.	MGB	1962/3	Pair HS4	6	MB	21	Red
	MGB Competition	1963/4	Pair HD8		UVD		Blue/Black
1800 c.c.	MGB and GT	1966	Pair HS4	6	5	21	Red
1098 c.c.	Midget Mk. II	1964	Pair HS2	H6	AN	GG	Blue
MORRIS							
	Minor (Series II) O.H.V.	1953/6	Single H1	EB	GG	MOW	
	Minor 1000	1957	Single H2	S	BXI	MO	Red
	Minor 1000 (paper air cleaner)	1957	Single H2	AH2	M	EB	Red
	Minor 1000 (rubber fuel line)	1957	Single H2	S	BXI	MO	Red
	Minor 1000 (rubber fuel line and paper cleaner)	1957	Single H2		M		Red
	Minor 1000 (steel levers)	1958	Single H2	S	BXI	MO	Red
	Minor 1000 (steel levers, paper air cleaner)	1958/9	Single H2	AH2	M	EB	Red
848 c.c.	Mini Minor	1959/62	Single HS2	M	EB	GG	Red
948 c.c.	Minor 1000*	1960/2	Single HS2	AH2	M	EB	Red
1098 c.c.	Minor and 1100	1962/3	Single HS2	H6	AN	EB	Red
*Replacement for Minor 1000		1960/2		AH2	M	EB	Red
Twin carburetter sets							
	Minor MM and Series II—Derrington	1948/56	Pair UBA	M9	EK	MOW	
	Oxford MO Series II/III—Derrington	1950/7	Pair H2	CJ	HB	MO	Red
950 c.c.	Minor—Power Drive and Alexander	1957	Pair H1	EB	GG	MOW	
	Series II Minor.	1953/6					

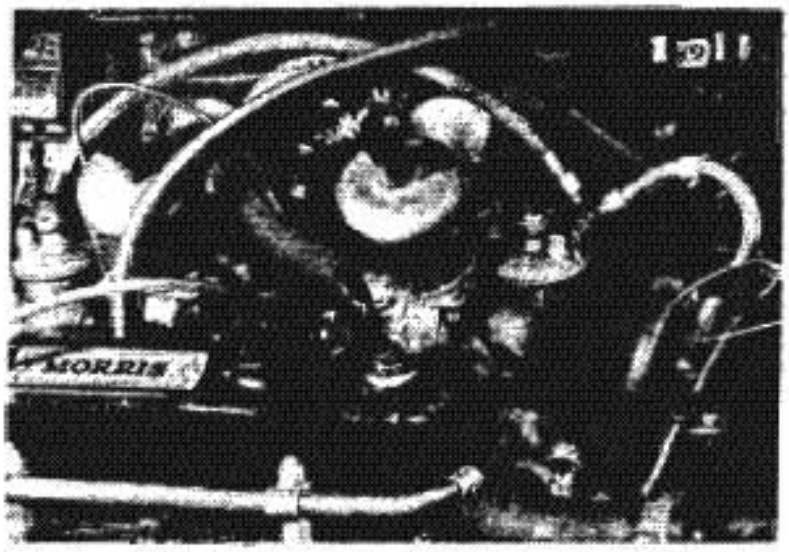

A works Mini Cooper S: within the engine department lurk these twin 1½ ins SUs in place of the standard 1¼ ins. carbs. Note the carb bellmoutha and the re-routed oil breather pipe all very neatly done.

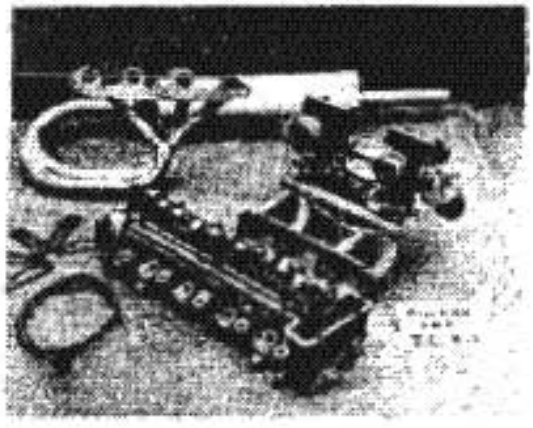

Below: these twin 1¾ ins. SUs were fitted to an MGB tuned by Bill Nicholson of Northampton. Together with other mods they helped propel it to a 0-60 time of 8.8 secs.

Above: twin 1¼ ins. SUs as supplied by Nerus for the Imp, other well known tuners sell this type of conversion for about £30 and results are generally good. Below: HS6s (1¾ ins.) as fitted to the MGC; its sister the MGB uses the visually similar 1¾ ins. twin HS4 carbs.

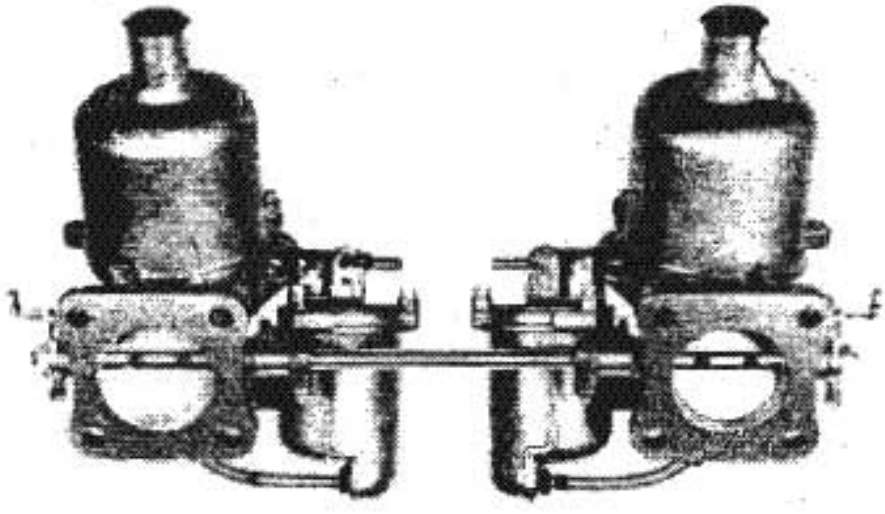

Appendix I contd

	CAR MODEL	YEAR	TYPE & No.	NEEDLE RICH	NEEDLE STD.	NEEDLE WK.	SPRING COLOUR
RILEY							
1489 c.c.	One-Point-Five	1957/64	Pair H4	AR	AD	HA	Red
1489 c.c.	One-Point-Five (L.H.D.)	1957/62	Pair H4	AR	AD	HA	Red
1498 c.c.	4/68	1959/61	Pair HD4	FT	FU	M9	Red
848 c.c.	Elf	1961/2	Single HS2	M	EB	GG	Red
1622 c.c.	4/72 Saloon	1961/4	Pair HD4	FU	HB	FK	Red
998 c.c.	Elf	1963/4	Single HS2	M	GX	GG	Red
1098 c.c.	Kestrel	1965/6	Pair HS2	D6	D3	GV	Blue
1275 c.c.	Kestrel	1967	Single HS4	BQ	DZ	CF	Red
ROVER							
2 litre	2000	1963/4	Single HS6		RN		Green
2 litre	2000 (Smith's valve)	1963/4	Single HS6		RR		Green
2 litre	2000 TC	1966	Pair HD8		U1		Black/Blue
STANDARD							
9 h.p. and 10 h.p.		1955/6	Pair H1		D3		
TRIUMPH							
	TR2	1953/5	Pair H4	GER	FV	CR	Red
1991 c.c.	TR3	1956/8	Pair H6	RH	SM	SL	Red
948 c.c.	Herald	1959/61	Pair H1	EB	GV	CA	
1991 c.c.	TR3; TR3A and TR4	1959/62	Pair H6	RH	SM	SL	Red
1147 c.c.	Spitfire 4	1962/3	Pair HS2	H6	AN	EB	Red
2·2 litre	TR4A	1965/6	Pair HS6	SW	TW	CIW	Red
1147 c.c.	Spitfire Group II	1966	Pair H4		DB		Blue
	Vitesse (Conversion)	1963/4	Pair HS2		MO		Red

·090 JET NEEDLES APPENDIX 2

AS	AA	AB	AC	AC2	AD	AE
·089	·089	·089	·089	·088	·089	·089
·085	·0845	·085	·085	·084	·085	·085
·0826	·080	·080	·082	·082	·082	·081
·080	·0767	·0785	·080	·080	·080	·078
·0782	·0725	·0768	·0783	·0783	·0780	·0763
·0765	·071	·075	·0765	·0765	·0760	·0754
·0746	·0689	·0732	·0746	·0746	·0740	·0745
·073	·0661	·0718	·073	·073	·0720	·0737
·0711	·0638	·0702	·071	·071	·070	·0728
·0694	·0614	·0688	·0694	·0694	·0680	·0718
·0676	·0591	·0671	·0676	·0676	·066	·071
·066	·0566	·0657	·066	·066	·064	·070
	·054	·064	·064	·064	·062	

AY	AZ	AAA	AAA cont.			
·089	·089	·089	·050			
·085	·085	·085	·048			
·0805	·0815	·0814	·046			
·0768	·079	·0785				
·0741	·0755	·0755				
·072	·071	·072				
·0694	·0662	·0674				
·0669	·0615	·063				
·0643	·0575	·060				
·0617	·0532	·058				
·059	·0490	·056				
·0565	·0445	·0540				
·0538	·0405	·052				

AF	AG	AH	AH1	AH2	AI	AJ
·089	·089	·088	·088	·089	·089	·089
·085	·085	·0862	·086	·085	·085	·085
·0814	·0795	·083	·082	·082	·0817	·0815
·078	·0745	·0803	·079	·0794	·0798	·079
·0758	·0702	·0775	·0765	·077	·078	·0767
·0727	·0665	·0756	·075	·0748	·0765	·0745
·071	·063	·0733	·073	·0726	·075	·0723
·0695	·0598	·0711	·071	·0704	·0732	·0703
·068	·0567	·069	·069	·0683	·0712	·0683
·0665	·054	·067	·067	·0662	·0693	·0663
·065	·051	·065	·065	·064	·0685	·064
·0632	·0485	·063	·063	·062	·0675	·062
	·046	·061	·061	·060		

BA	BB	BD	BE	BF	BG	BH
·090	·089	·090	·089	·089	·089	·089
·0856	·085	·0856	·084	·085	·085	·085
·0822	·0825	·0822	·0805	·082	·0815	·0812
·0805	·080	·0805	·0773	·0796	·0782	·0775
·0794	·0775	·0794	·074	·0764	·0745	·0753
·0777	·075	·0777	·0705	·072	·0695	·074
·0760	·0725	·0760	·067	·068	·0647	·0731
·0743	·070	·0750	·0634	·0635	·060	·0722
·0727	·0675	·0740	·060	·0591	·0557	·0714
·0710	·065	·0730	·0565	·0549	·0515	·0705
·0694	·0625	·0720	·053	·0505	·0474	·0696
·0677	·060	·0710	·0495	·0463	·043	·0688
	·0575		·046	·042	·039	·068

AK	AL	AM	AN	AO	AP	AQ
·089	·089	·089	·089	·089	·089	·089
·086	·085	·085	·0855	·085	·085	·085
·0825	·0816	·081	·0827	·082	·0817	·080
·0795	·0796	·078	·0807	·0793	·0796	·076
·0786	·0781	·0753	·0787	·0766	·0777	·0724
·078	·077	·073	·077	·0737	·0765	·0694
·077	·076	·0704	·0753	·0705	·0752	·0668
·0764	·0748	·068	·074	·0673	·0745	·0642
·0755	·0738	·0655	·073	·064	·0736	·062
·0747	·0726	·063	·072	·0608	·0727	·060
·0738	·0715	·0606	·071	·0576	·072	·058
·073	·0705	·0583	·070	·0544	·071	·0558
		·056	·069	·051		·0536

BI	BJ	BK	BL	BM	BN	BO
·089	·089	·089	·089	·089	·089	·089
·0855	·0855	·0855	·0855	·0855	·0855	·0855
·0808	·0824	·0815	·081	·0805	·0816	·0835
·0777	·0794	·0785	·0777	·0768	·0784	·0815
·0751	·0769	·0762	·075	·074	·0758	·080
·073	·0749	·0738	·073	·072	·0738	·0787
·0714	·0734	·0722	·0715	·0705	·0724	·077
·0705	·0725	·0715	·0707	·0695	·0714	·0757
·0701	·0721	·071	·070	·0692	·0707	·075
·0697	·0717	·0706	·0698	·0688	·0703	·074
·0694	·0714	·0703	·0693	·0684	·0701	·073
·069	·071	·070	·069	·068	·070	·072
		·0695	·0688			·071

AR	AS	AT	AU	AV	AW	AX
·089	·089	·088	·089	·089	·090	·089
·085	·0845	·0856	·084	·085	·085	·0843
·082	·079	·0833	·0815	·0805	·0807	·0807
·0795	·075	·0809	·079	·0773	·078	·0775
·0771	·072	·0785	·0773	·0742	·0757	·075
·0748	·0692	·0761	·0755	·0717	·0735	·073
·073	·0665	·0738	·0737	·070	·0713	·071
·0712	·0635	·0714	·0717	·0675	·0693	·0692
·0696	·061	·069	·0698	·065	·0674	·0675
·068	·0586	·0666	·068	·0625	·0655	·066
·066	·056	·0643	·066	·060	·0637	·0645
·064	·0533	·0619	·064	·059	·0618	·063
	·051			·058	·060	·0615

BP	BQ	BR	BS	BT	BU	BV
·089	·089	·089	·088	·088	·090	·089
·085	·085	·085	·0856	·0856	·085	·0845
·0814	·082	·0817	·0836	·0835	·080	·081
·078	·079	·0785	·0817	·0813	·077	·0785
·074	·075	·0757	·0798	·0792	·0745	·076
·0715	·0725	·075	·0778	·0771	·072	·074
·0695	·0705	·0741	·076	·0749	·0695	·072
·0673	·0685	·0733	·074	·0726	·0675	·070
·065	·0662	·0728	·072	·0705	·0655	·068
·0625	·064	·072	·0701	·0684	·0625	·066
·060	·0616	·071	·0683	·0663	·0602	·064
·058	·0594	·070	·0664	·064	·058	·062
·056	·057	·069			·056	·060

·090 JET NEEDLES

BW	BX	BX1	BY	BZ		
·089	·089	·089	·088	·089		
·0855	·085	·085	·084	·0843		
·0818	·0805	·0827	·0805	·081		
·079	·077	·081	·0775	·0752		
·0765	·075	·0792	·0745	·0719		
·0742	·0735	·0777	·0725	·0686		
·0718	·072	·076	·0709	·0653		
·0693	·0705	·075	·069	·0622		
·067	·0687	·074	·067	·059		
·0645	·067	·073	·0653	·056		
·062	·0655	·072	·0635	·053		
·0596	·064	·071	·062	·050		
·057			·060	·047		

C	CA	CB	CC	CD	CE	CF
·089	·089	·089	·089	·089	·089	·089
·0845	·0855	·085	·085	·085	·085	·085
·081	·084	·0805	·081	·0815	·082	·083
·077	·0825	·077	·078	·0775	·0795	·0805
·0742	·081	·0745	·075	·0735	·0777	·0787
·071	·0807	·0725	·070	·076	·076	·0767
·0683	·0803	·071	·0698	·069	·0745	·0747
·066	·0803	·0695	·067	·0678	0735	·0727
·0635	·0803	·068	·064	·0666	·072	·0707
·0613	·0803	·0665	·061	·0654	·071	·0687
·0594	·0803	·065	·058	·0643	·0695	·0667
·0575	·0803	·0635	·055	·063	·0682	·0647
·056	·0803	·062	·052	·062	·067	

CG	CH	CJ	CK	CL	CM	CN
·090	·090	·090	·090	·090	·088	·089
·084	·084	·084	·084	·084	·084	·085
·081	·0805	·0815	·081	·080	·0805	·0812
·079	·0782	·0795	·079	·0775	·0775	·078
·0765	·0767	·0775	·0775	·076	·074	·075
·075	·076	0761	·077	·075	·0718	·072
·0735	·0756	·0747	·0766	·0746	·070	·069
·0722	·0752	·0734	·0762	·0742	·0685	·0665
·0707	·0747	·072	·0757	·0737	·0668	·064
·0693	·0743	·0705	·0753	·0733	·0652	·062
·0678	·0738	·0692	·0749	·0728	·0635	·060
·0664	·0723	·0677	·0745	·0724	·062	·058
·065	·073	·0664	·074	·072	060	·056

CO	CP	CP4	CQ	CR	CS	CS1
·089	·089	·088	·088	·088	·089	·089
·085	·085	·0852	·0852	·0852	·085	·085
·081	·0813	·0825	·0825	·083	·0822	·081
·0787	·0793	·079	·0798	·0805	·0792	·077
·0765	·0775	·0757	·0768	·078	·0765	·073
·0747	·0757	·0725	·0737	·0754	·0725	·0692
·073	·074	·069	·0706	·0725	·0706	·066
·0725	·0735	·0655	·0676	·0697	·069	·063
·072	·073	·062	·0646	·067	·0672	·060
·0717	·0725	·0585	·0615	·064	·0655	·057
·0714	·072	·0545	·0585	·0613	·0638	·054
·071	·0715	·051	·0555	·0585	·062	·051
		·047	·0525	·0556	·0605	·048

CS2	CT	CU	CW	CX	CY	CZ
·089	·089	·089	·089	·089	·089	·089
·085	·085	·085	·085	·085	·085	·085
·081	·081	·0825	·081	·081	·080	·0827
·077	·077	·080	·079	·0796	·076	·0806
·073	·0738	·0775	·078	·0788	·0738	·0785
·069	·0706	·0735	·077	·078	·0715	·0745
·065	·0675	·0715	·0763	·0771	·0695	·0727
·0615	·0643	·070	·0754	·0763	·068	·071
·058	·061	·0683	·0745	·0755	·067	·0693
·0546	·058	·0665	·0736	·0748	·066	·0675
·051	·0547	0647	·0727	·074	·0655	·0657
·0475	·0515	·0630	·0718	·073	·065	·064
·044	·0485	·0610			·0645	·0625

D1	D2	D3	D4	D6	D7	D8
·089	·089	·089	·089	·089	·089	·089
·085	·085	·085	·0855	·0855	·0855	·085
·082	·0815	·083	·0825	·0825	·0817	·0817
·0802	·0800	·081	·0805	·0805	·0795	·0785
·0793	·0795	·080	·079	·0793	·0785	·0767
·0785	·0790	·0794	·078	·0785	·0778	·076
·0776	·0785	·0785	·0767	·0776	·077	·075
·077	·0780	·0778	·0756	·077	·0765	·074
·0764	·0775	·0772	·0745	·0764	·0759	·073
·0759	·0770	·0764	·0733	·0759	·0752	·072
·0752	·0765	·0757	·0721	·0752	·0747	·071
·0748	·0760	·075	·071	·0748	·074	·070

D9	DA	DB	DC	DD	DE	DH
·089	·089	·089	·089	·089	·089	·089
·0852	·084	·085	·084	·0855	·0855	·085
·0825	·082	·082	·082	·0835	·0825	·0822
·0806	·080	·080	·0805	·0817	·0802	·080
·0791	·0788	·078	·0796	·0798	·0772	·0775
·0778	·0784	·0753	·0794	·0782	·0745	·074
·0764	·0780	·0717	·0792	·0767	·0734	·072
·075	·0776	·0674	·0790	·0752	·0729	·071
·0736	·0773	·062	·0787	·0740	·0723	·070
·0723	·0769	·0557	·0785	·0730	·0717	·069
·071	·0765	·0493	·0783	·0720	·0712	·068
·0696	·0761	·043	·0780	·0710	·0707	·067
		·0368				·066

DJ	DK	DL	DM	DN	DP	DQ
·089	·089	·089	·089	·0885	·089	·089
·085	·085	·085	·084	·085	·085	·085
·0822	·0817	·082	·081	·082	·081	·0815
·0795	·0787	·0795	·0791	·080	·0777	·0785
·0765	·0755	·077	·0780	·0782	·075	·076
·073	·072	·0745	·0775	·077	·0735	·073
·071	·070	·0715	·0770	·076	·0723	·071
·070	·069	·070	·0765	·075	·0715	·070
·069	·068	·0685	·0760	·074	·071	·069
·068	·067	·067	·0755	·0728	·0703	·068
·067	·066	·0655	·0750	·0717	·0698	·067
·066	·065	·064	·0745	·0705	·069	·066
·065	·064	·0625			·0688	·065

·090 JET NEEDLES

DR	DS	DT	DU	DV	DW	DY
·088	·089	·088	·089	·089	·089	·089
·085	·085	·084	·085	·084	·085	·085
·080	·0805	·081	·081	·0822	·0815	·079
·0768	·0776	·078	·0775	·081	·0795	·0765
·0735	·0759	·076	·0755	·0792	·0780	·074
·0705	·074	·074	·074	·0781	·0765	·0715
·0675	·0725	·0723	·073	·078	·0752	·069
·065	·071	·0712	·072	·078	·074	·0665
·0635	·0695	·0709	·071	·078	·0728	·0643
·0627	·068	·0705	·070	·078	·0714	·062
·0618	·067	·0703	·069	·078	·070	·061
·0608	·066	·0701	·068	·078	·0686	·060
·060		·070				·059

EP	EQ	ER	ES	ET	EU	EV
·089	·089	·089	·089	·088	·089	·090
·085	·085	·085	·085	·086	·085	·0855
·0835	·0817	·0833	·0818	·0845	·0825	·0815
·0815	·0785	·081	·079	·0825	·0805	·078
·0795	·076	·0777	·077	·0803	·0785	·075
·0775	·0746	·074	·0755	·0781	·077	·0725
·0755	·0732	·0725	·0748	·0773	·0755	·0705
·075	·072	·0712	·074	·077	·0745	·069
·075	·071	·0706	·073	·077	·074	·068
·075	·070	·0706	·073	·077	·074	·067
·075	·069	·0706	·073	·077	·074	·066
·075	·068		·073			·065

DZ	E2	E2/1	E3	E3/1	E4	EA
·089	·088	·089	·088	·088	·088	·089
·085	·0845	·085	·0862	·0845	·084	·085
·0827	·081	·0826	·083	·0817	·080	·081
·0795	·0775	·0788	·0803	·079	·078	·078
·077	·075	·0763	·0775	·076	·076	·075
·0745	·0725	·0736	·0747	·073	·0739	·072
·0715	·070	·0711	·072	·070	·0718	·0695
·070	·0675	·0685	·0693	·0675	·0695	·067
·0685	·0546	·066	·0665	·0646	·0673	·0645
·067	·0626	·064	·0638	·0626	·0651	·062
·0655	·0605	·062	·062	·0605	·063	·0595
·064	·059	·060	·060	·059	·061	·057
·0625	·057	·058	·0582	·057	·059	·0545

EW	EX	EX/1	EY	EZ		
·089	·088	·088	·088	·088		
·085	·0862	·0865	·0856	·0865		
·0825	·0835	·084	·0835	·0838		
·081	·081	·0816	·0812	·0798		
·079	·0785	·0794	·0789	·0775		
·0775	·076	·077	·0741	·0751		
·0755	·0735	·0745	·0716	·0737		
·0745	·071	·072	·0708	·0726		
·074	·0685	·0698	·0704	·0716		
·074	·066	·0675	·0701	·0706		
·074	·0635	·065	·0698	·0696		
	·061	·0627				
	·058	·0602				

EB	EC	ED	EE	EF	EG	EH
·089	·089	·089	·089	·089	·088	·089
·0855	·085	·085	·085	·085	·085	·085
·0835	·081	·0825	·080	·082	·080	·082
·0815	·0775	·0805	·0777	·0795	·0768	·0805
·0795	·0740	·0785	·075	·077	·074	·0788
·0777	·0705	·076	·0735	·074	·071	·0775
·0762	·0675	·074	·072	·072	·0685	·077
·075	·0645	·072	·0715	·071	·0665	·077
·074	·0625	·070	·0709	·070	·065	·077
·073	·0605	·068	·0703	·069	·0637	·077
·072	·0585	·066	·0696	·068	·062	·077
·071	·0570	·064	·069	·067	·061	·077
	·0555	·062		·066	·060	·077

FA	FB	FC	FD	FE	FF	FG
·089	·089	·090	·088	·089	·089	·089
·085	·085	·0865	·0865	·085	·0856	·085
·081	·0806	·083	·084	·081	·0822	·0795
·077	·0767	·0795	·0805	·0775	·079	·075
·072	·0729	·076	·078	·074	·0757	·071
·067	·070	·073	·076	·071	·0722	·0678
·063	·0687	·071	·075	·0695	·0700	·065
·060	·0676	·070	·074	·0686	·0672	·0625
·0585	·0667	·069	·073	·0678	·0651	·060
·0576	·0658	·068	·072	·0671	·0639	·058
·0567	·065	·067	·071	·0664	·0622	·056
·056	·0643	·066		·0657		·054
·055	·0635	·065		·065		·052

EI	EJ	EK	EL	EM	EN	EO
·089	·089	·089	·089	·089	·089	·088
·085	·085	·085	·085	·085	·085	·085
·081	·0805	·0827	·080	·081	·0813	·0806
·0775	·076	·081	·0775	·078	·0778	·0773
·073	·0715	·0792	·0747	·0763	·074	·0746
·069	·068	·0777	·072	·0747	·0706	·072
·066	·065	·0762	·070	·073	·068	·0697
·0635	·0625	·075	·068	·0725	·0657	·0677
·0618	·0605	·075	·066	·072	·0643	·0668
·060	·059	·075	·064	·0715	·0632	·0659
·059	·058	·075	·062	·071	·062	·065
·058	·057	·075	·060	·0705	·061	·064
·057	·056		·058		·060	·063

FH	FI	FJ	FK	FL	FM	FN
·089	·089	·090	·089	·089	·090	·089
·085	·085	·085	·085	·085	·083	·085
·082	·0825	·081	·083	·079	·0796	·081
·080	·079	·0775	·0812	·0765	·0772	·0775
·079	·076	·076	·0796	·074	·075	·0735
·078	·073	·0745	·0784	·0715	·0727	·069
·077	·0705	·0725	·0772	·069	·0703	·066
·076	·0693	·071	·076	·0665	·068	·063
·075	·0682	·070	·0748	·065	·0657	·061
·074	·067	·068	·0736	·065	·0635	·058
·073	·0656	·0665	·0724	·065	·0612	·055
·072	·064	·065	·0712		·060	
	·063					

·090 JET NEEDLES

FO	FP	FQ	FR	FS	FT	FU
·089	·0898	·0890	·089	·089	·089	·089
·085	·0855	·0850	·085	·085	·085	·083
·0818	·0826	·0820	·081	·0827	·082	·082
·0785	·0799	·0795	·078	·081	·0795	·080
·076	·0778	·0774	·075	·0785	·0772	·078
·0745	·0762	·0758	·0728	·076	·0753	·0763
·0731	·0754	·0745	·0705	·075	·0738	·075
·0729	·0750	·0735	·0685	·074	·0728	·074
·0727	·0743	·0725	·0663	·073	·0724	·0733
·0725	·0735	·0715	·0642	·072	·072	·0728
·0723	·0728	·0705	·0622	·071	·071	·0724
·0721	·0720	·0695	·060	·070	·072	·0714

GN	GO	GP	GR	GS	GT	GU
·089	·089	·089	·089	·089	·089	·089
·0855	·086	·085	·085	·085	·085	·0855
·0835	·0845	·080	·082	·0815	·082	·083
·081	·0825	·076	·079	·0785	·0795	·0805
·078	·0792	·075	·077	·0755	·077	·0775
·0755	·0777	·0725	·075	·0725	·0745	·0745
·0725	·0765	·0696	·073	·070	·071	·0705
·070	·0755	·0666	·071	·0675	·0675	·067
·0675	·0750	·0636	·069	·0650	·0640	·0635
·0650	·0745	·0606	·067	·0625	·0605	·060
·0625	·0740	·0577	·065	·060	·0570	·0565
·060	·0735	·055	·063	·0575	·0535	·053
·0575	·0730	·052	·061	·055	·050	

FV	FW	FX	FY	FZ
·089	·089	·089	·090	·089
·085	·085	·0855	·085	·085
·083	·081	·0827	·081	·0813
·080	·0775	·080	·0775	·0789
·0773	·075	·0775	·075	·077
·0745	·0725	·075	·0735	·0756
·0715	·070	·0715	·072	·0748
·0686	·0675	·068	·071	·074
·0658	·0665	·0653	·070	·0735
·0647	·0665	·0627	·068	·073
·0636	·0665	·060	·066	·0725
·0625	·0665	·059	·064	·072
·0614	·0665	·058	·062	

GV	GW	GX	GY	GZ
·089	·089	·089	·089	·089
·0855	·085	·0855	·0855	·0855
·0836	·083	·0835	·0832	·0835
·082	·080	·0815	·0812	·0811
·0804	·0773	·0795	·079	·0788
·080	·076	·0775	·077	·0765
·0796	·0745	·0755	·0753	·0742
·0793	·073	·0735	·074	·072
·0793	·0715	·072	·073	·0698
·0793	·070	·070	·072	·0676
·0793	·0685	·068	·071	·0655
·0793	·067	·066	·070	·0631
·0793	·066	·064	·069	·061

G2	GA	GB	GC	GD	GE	GE/R
·0875	·089	·089	·089	·089	·089	·089
·0835	·085	·085	·085	·085	·0845	·085
·081	·0795	·082	·083	·0833	·082	·0825
·0785	·077	·0795	·080	·081	·0793	·0795
·0765	·074	·0771	·0773	·079	·0766	·076
·0745	·0715	·0748	·0740	·0766	·0739	·0725
·0725	·069	·073	·0705	·0705	·0712	·069
·0705	·067	·0712	·0665	·0743	·0686	·066
·069	·065	·0696	·0630	·0738	·0656	·064
·0674	·0632	·0685	·0605	·0738	·0643	·062
·066	·0615	·068	·0590	·0738	·0627	·0615
·0642	·0597	·067	·0575	·0738	·0627	·061
	·058		·0560		·0627	·0605

H1	H2	H4	H6	HA	HB	HC
·088	·088	·089	·089	·089	·089	·089
·085	·085	·085	·0855	·085	·085	·0855
·082	·082	·081	·082	·0825	·0825	·0822
·0792	·0792	·0778	·080	·0805	·0805	·0805
·0762	·0762	·076	·078	·0785	·0785	·0785
·0735	·0733	·0741	·076	·077	·0776	·077
·0707	·0707	·072	·074	·0756	·0764	·0755
·0686	·0684	·0702	·072	·074	·0752	·0751
·0665	·0661	·0683	·070	·0727	·0743	·0747
·0644	·0638	·0663	·068	·0711	·0732	·0743
·0622	·0615	·064	·066	·0698	·072	·0739
·0601	·0592	·062	·064	·068	·071	·0735
·058	·057			·067	·070	

GF	GG	GH	GI	GJ	GL	GM
·089	·089	·089	·089	·089	·089	·089
·085	·087	·0845	·083	·084	·084	·086
·0795	·0845	·082	·0825	·0817	·082	·0842
·077	·0825	·0786	·079	·0792	·0795	·0817
·0745	·0808	·0753	·075	·0770	·0772	·0782
·073	·079	·0695	·0715	·0745	·075	·0770
·072	·078	·0635	·069	·0717	·0727	·0758
·0715	·077	·0586	·067	·0696	·0706	·0750
·071	·0758	·0570	·0665	·0675	·0685	·0745
·0703	·0745	·0565	·0665	·0654	·0664	·0740
·0696	·0732	·0565	·0665	·0632	·0642	·0735
·069	·072	·0565	·0665	·0611	·0621	·0730
				·059	·060	

HD	HE	HF	HG	HV1	HV3	HV4
·089	·090	·090	·089	·089	·089	·089
·0855	·0845	·0845	·0845	·084	·084	·084
·0825	·0817	·082	·0823	·080	·080	·080
·081	·080	·0805	·0802	·0778	·078	·0782
·0795	·0787	·0797	·0782	·0756	·076	·0764
·078	·078	·079	·0753	·0734	·074	·0746
·0766	·0776	·0787	·0737	·0712	·072	·0728
·0762	·0772	·0784	·072	·069	·070	·071
·0758	·0769	·078	·070	·0668	·068	·0692
·0754	·0766	·0776	·068	·0646	·066	·0674
·0751	·0763	·0774	·066	·0626	·064	·0656
·0748	·0759	·077	·064	·0602	·062	·0638
	·0755	·0766	·062	·058	·060	·062

·090 JET NEEDLES

JM						
·089						
·085						
·081						
·078						
·0752						
·0729						
·0702						
·068						
·0653						
·0627						
·060						
·059						
·058						

1	2	3	4	5	6	7
·089	·089	·089	·089	·089	·089	·089
.085	·085	·085	·085	·085	·085	·085
·0 14	·0814	·0814	·0814	·0814	·0814	·0814
0785	·0785	·0785	·0785	·0785	·0785	·0785
077	·0767	·0765	·0761	·0758	·0755	·0755
·0755	·0749	·0744	·0737	·0733	·0725	·072
·074	·0732	·0723	·0714	·0705	·0696	·0686
0725	·0714	·0703	·0692	·068	·0666	·065
071	·0696	·0683	·0668	·0653	·0636	·062
·0695	·0678	·0661	·0645	·0627	·0606	·0587
·068	·066	·064	·062	·060	·0577	·0553
·067	·065	·063	·061	·059	·055	·052
·066	·064	·062	·060	·058	·052	·049

L	L11	L12	LS	LS1		
·089	·089	·089	·088	·088		
·085	·084	·085	·085	·085		
·081	·0801	·081	·080	·030		
·079	·0772	·078	·077	·0765		
·077	·0745	·0755	·0735	·073		
·075	·0722	·073	·0705	·071		
·0735	·0702	·0702	·068	·0798		
·072	·0675	·0675	·0658	·0678		
·071	·065	·065	·0636	·066		
·070	·0625	·0625	·0613	·064		
·069	·060	·060	·059	·062		
·068	·0575	·0575	·057	·060		
	·055	·055	·055	·058		

20	21	24	24A	24B	61	62
·089	·089	·088	·088	·088	·089	·089
·0855	·0855	·0845	·0845	·0845	·085	·085
·0822	·0827	·0815	·0815	·0815	·0805	·081
·0792	·080	·0785	·0785	·0795	·0775	·078
·076	·0775	·0755	·076	·0775	·0745	·075
·073	·075	·0725	·0738	·0755	·0725	·0734
·0703	·0723	·0702	·0716	·0735	·0709	·0719
·0677	·0697	·0682	·0698	·0715	·069	·070
·0647	·0671	·0667	·068	·0695	·067	·0685
·0624	·0646	·065	·066	·0675	·0635	·067
·060	·0628	·0636	·064	·0655	·0635	·065
·058	·0608	·0625	·062	·0635	·062	·0635
·056	·059	·061	·060	·0615	·060	·062

M	M1	M2	M5	M6	M7	M8
·089	·089	·089	·089	·089	·089	·089
·0855	·085	·085	·085	·085	·085	·086
·0832	·0817	·0817	·0817	·0817	·0822	·0827
·0808	·0796	·080	·0792	·0801	·0807	·0812
·0785	·0777	·0785	·0776	·0786	·0792	·0797
·0763	·0757	·0765	·076	·077	·0777	·0782
·0745	·0737	·0745	·0745	·0754	·0762	·0767
·0726	·0717	·0725	·0729	·0738	·0747	·0752
·0707	·0698	·0705	·0712	·0723	·0732	·0737
·0688	·0678	·0688	·0696	·0707	·0717	·0722
·0669	·0659	·0669	·068	·0691	·0702	·0707
·065	·064	·0665	·0666	·0676	·0687	·0692

69	80	81				
·089	·089	·089				
·085	·085	·085				
·0805	·080	·080				
·0785	·078	·077				
·0765	·0758	·0742				
·075	·0733	·0719				
·074	·0705	·0699				
·073	·068	·068				
·072	·0653	·0653				
·071	·0627	·0627				
·070	·060	·060				
·069	·059	·059				
	·058	·058				

M9	MA	MB	MME	MO	MOW	MW
·089	·089	·089	·089	·089	·089	·089
·085	·085	·085	·085	·0855	·0855	·0855
·0827	·0817	·0815	·0813	·0835	·0837	·084
·081	·0795	·079	·078	·0815	·082	·0825
·0792	·078	·0767	·074	·080	·0808	·0813
·0777	·0765	·074	·0707	·07875	·0795	·0803
·0762	·075	·0715	·0673	·0775	·0783	·0792
·0747	·0735	·068	·0636	·07625	·077	·078
·0732	·072	·0653	·060	·075	·0758	·0768
·0717	·0705	·0627	·0563	·07375	·0745	·0757
·0702	·069	·060	·053	·0725	·0732	·0746
·0687	·0675	·059	·0495	·07125	·072	·0735
		·058	·046			

O7						
·089						
·085						
·0815						
·0795						
·078						
·077						
·076						
·075						
·074						
·073						
·072						
·071						

·090 JET NEEDLES

P4	P6	P61	PJ			
·088	·088	·088	·089			
·0845	·0845	·0845	·085			
·081	·081	·081	·0822			
·0785	·0775	·077	·0807			
·0755	·0738	·0746	·0795			
·073	·0703	·0715	·079			
·070	·067	·0684	·0785			
·0675	·0638	·0653	·078			
·0645	·0603	·062	·0775			
·06175	·057	·059	·077			
·059	·054	·056	·0765			
·0562	·0505	·053	·076			
·0535	·0473	·050				

TB						
·089						
·085						
·081						
·078						
·075						
·073						
·071						
·0698						
·0678						
·066						
·064						
·062						
·060						

QA	QW					
·089	·089					
·085	·085					
·082	·0825					
·0796	·0802					
·077	·0781					
·0745	·0755					
·072	·0731					
·0695	·0708					
·0668	·0685					
·0642	·066					
·0615	·0636					
·059	·0613					
·0565	·059					

V2	V3	VS				
·089	·089	·089				
·085	·085	·085				
·082	·0826	·081				
·0795	·0804	·077				
·0775	·0783	·0748				
·0756	·0764	·0725				
·0738	·0746	·071				
·0718	·0726	·0695				
·0698	·0706	·068				
·0678	·0686	·0665				
·0658	·0666	·065				
·064	·0646	·0635				

RJ	RJ-2	R6	RLB	RLS	RO	RS
·089	·088	·089	·089	·089	·089	·089
·085	·084	·085	·085	·085	·085	·085
·0805	·0805	·081	·081	·0804	·081	·0823
·0776	·0776	·077	·077	·076	·077	·081
·0759	·0759	·0732	·0732	·0725	·074	·0803
·074	·074	·070	·0693	·0692	·071	·0795
·0722	·0722	·0665	·066	·066	·0685	·0786
·0703	·0703	·063	·0626	·0626	·066	·078
·0687	·0687	·060	·0592	·0592	·0633	·0775
·067	·067	·057	·056	·056	·0605	·077
·065	·065	·054	·0526	·0526	·058	·0765
·0632	·0632	·051	·0495	·0495	·0558	·076
		·048	·046	·046	·053	

WJ	WW	WXI				
·088	·089	·089				
·083	·085	·085				
·0805	·0814	·082				
·078	·0785	·0795				
·0763	·0775	·0777				
·0745	·0765	·0765				
·073	·0755	·0755				
·071	·0746	·0746				
·0694	·0736	·0736				
·0677	·0728	·0728				
·066	·0718	·0718				
·065	·0709	·0709				

S	S4	S5	S6			
·089	·0895	·0895	·089			
·085	·0852	·0852	·085			
·0822	·082	·0815	·0805			
·0806	·079	·078	·077			
·079	·0765	·0753	·0743			
·0774	·0744	·073	·0715			
·0758	·0722	·0707	·069			
·074	·070	·0684	·0666			
·0724	·0677	·0663	·064			
·0708	·0656	·0639	·062			
·069	·0634	·0616	·059			
·0675	·0612	·0593	·0568			
	·059	·057	·0545			

·100 JET NEEDLES

A9						
·098						
·0946						
·0913						
·088						
·085						
·0834						
·0818						
0802						
·0787						
·077						
·0755						
·074						
0722						
·0706						

BC						
·099						
·095						
·091						
·088						
·085						
·0825						
·0803						
·0785						
·0765						
·075						
·073						
·072						
·071						
·070						

CI	CIW	CV				
·099	·099	·099				
·095	·0955	·094				
·0916	·093	·090				
·0889	·0905	·0867				
·0865	·0875	·084				
·084	·0856	·0815				
·0818	·0836	·0795				
·0796	·0819	·0775				
·0778	·080	·076				
·076	·078	·0745				
·074	·076	·0732				
·073	·0752	·072				
·072	·0746	·071				
·071	·074	·070				

DF	DG	DX				
·100	·100	·099				
·098-1/16	·098-1/16	·0958				
·096	·096	·0926				
·091	·0905	·0888				
·088	·087	·0859				
·085	·0836	·0830				
·082	·0804	·0775				
·0782	·0772	·0740				
·075	·074	·0705				
·0725	·071	·0670				
·070	·0689	·0635				
·0685	·067	·0600				
·067	·0653	·0565				
·0655	·0636	·0530				
·064	·062					

GK			K	KA	KB	KC
·100			·100	·099	·099	·099
·094			·095	·095	·095	·0935
·089			·0905	·092	·0917	·090
·085			·0865	·0895	·090	·087
·081			·083	·0876	·0886	·084
·078			·080	·0855	·0872	·082
·075			·0777	·0835	·086	·080
·072			·076	·0814	·085	·0785
·069			·074	·0793	·0845	·0765
·066			·0722	·0784	·084	·075
·063			·0705	·078	·0835	·073
·060			·0865	·078	·083	·0715
·057			·0667	·078	·0825	·0695
·054			·063	·078		·0675

KD	KE	KF	KG	KH	KI	KK
·093	·099	·099	·099	·099	·098	·099
·095	·095	·095	·095	·0935	·094	·095
·0908	·0917	·091	·0915	·0883	·090	·0925
·0883	·090	·089	·0895	·0863	·0865	·0893
·0856	·0885	·0875	·0875	·0843	·083	·086
·083	·087	·0855	·0855	·0825	·080	·0828
·0775	·0848	·0835	·0841	·0805	·0777	·0795
·074	·0838	·082	·0834	·0785	·076	·0738
·0705	·083	·081	·0827	·076	·074	·0615
·067	·0822	·080	·0820	·0735	·0722	·0517
·0635	·0815	·0795	·0810	·071	·0705	·042
·060	·0808	·079	·0800	·0685	·0685	·042
·0565	·080	·079	·0790	·066	·0667	·042
·053	·0792	079	·0780		·065	·042

KT	KTA	KW	KW1	KW2	KWR	
·100	·100	·100	·100	·100	·100	
·095	·095	·095	·095	·095	·095	
·0905	·0895	·091	·0915	·0905	·090	
·087	·0865	·0877	·0885	·0875	·087	
·0845	·0835	·084	·0851	·0845	·084	
·0822	·0815	·0805	·082	·0815	·081	
·0802	·0802	·077	·079	·0788	·0786	
·079	·0788	·073	·076	·076	·076	
·0775	·0775	·0695	·0728	·0728	·0728	
·076	·076	·0661	·0695	·0695	·0695	
·075	·075	·063	·0663	·0663	·0663	
·074	·074	·060	·063	·063	·063	
·073	·073	·057	·060	·060	·060	
·072	·072	·054	·057	·057	·057	

LB1	LB2	LFN	LBA		MC	
·100	·100	·099	·100		·100	
·096	·095	·094	·096		·095	
·0925	·091	·0885	·093		·0915	
·0895	·0895	·085	·0906		·0885	
·087	·086	·0815	·0883		·0851	
·085	·084	·078	·0863		·082	
·083	·0825	·075	·0848		·079	
·082	·0815	·0723	·0839		·076	
·081	·0805	·0695	·0830		·0728	
·080	·0795	·0668	·0821		·0684	
·079	·0785	·064	·0812		·064	
·078	·0775	·061	·0804		·060	
·077	·0765	·0585	·0796		·0555	
·076	·0755	·0556	·0788		·051	

·100 JET NEEDLES

S3	S5	S8		OA6	OA7	OA8
·100	·100	·100		·100	·100	·100
·095	·095	·095		·096	·096	·097
·090	·090	·090		·0917	·093	·094
·0858	·0858	·0858		·0887	·0902	·0913
·0815	·0815	·0815		·0856	·0872	·0888
·0777	·078	·078		·0825	·0843	·086
·0738	·074	·0744		·0794	·0814	·0835
·070	·070	·0712		·0762	·0786	·0808
·0668	·067	·0685		·0731	·0757	·0782
·0636	·064	·066		·070	·0727	·0755
·0606	·062	·064		·067	·070	·073
·0579	·060	·062		·064	·067	·0702
·0552	·057	·060		·061	·064	·0675
·053	·055	·058		·058	·061	·065

RA	RB	RC	RD	RE	RF	RG
·100	·099	·099	·099	·099	·100	·100
·094	·095	·0946	·095	·095	·095	·095
·088	·0907	·090	·090	·092	·090	·0905
·083	·0866	·0855	·0865	·089	·0863	·087
·0785	·0825	·081	·0835	·0856	·0825	·0836
·0753	·0784	·0765	·081	·0805	·0788	·0802
·0722	·074	·072	·079	·0753	·075	·0768
·069	·070	·0674	·077	·0712	·0712	·0732
·0658	·0657	·0627	·0757	·0670	·0675	·070
·0627	·0615	·0583	·0742	·0628	·0637	·0665
·0595	·0575	·0537	·073	·0587	·060	·0630
·0564	·0532	·0492	·0715	·0543	·057	·060
·053	·049	·0446	·0703	·0501	·054	·057
·050	·045	·040	·069	·0460	·051	·054

RH	RI	RJ	RK	RL	RN	RP
·100	·099	·100	·100	·100	·099	·099
·095	·095	·095	·095	·095	·095	·095
·0915	·0912	·0910	·0915	·0920	·092	·0905
·0878	·0881	·087	·088	·089	·089	·087
·0846	·0846	·0844	·0854	·086	·0859	·085
·0813	·0804	·0818	·0830	·0835	·0808	·0832
·078	·0763	·0792	·0805	·0810	·076	·082
·075	·0722	·0766	·7080	·0785	·0721	·0815
·072	·067	·0740	·0756	·0760	·0688	·0809
·069	·0605	·0714	·0732	·0735	·0651	·080
·066	·0567	·0688	·0708	·0710	·0617	·0794
·063	·0525	·0662	·0683	·0685	·0581	·0786
·060	·049	·0630	·066	·0660	·0547	·0778
·057		·0610	·0635	·0635	·0510	·077

RR	RU	RV
·099	·100	·100
·095	·095	·095
·0922	·089	·089
·0895	·084	·084
·086	·081	·081
·0808	·0785	·0785
·076	·0756	·0755
·0721	·0733	·073
·0688	·071	·070
·0651	·0688	·067
·0617	·066	·0645
·0581	·0636	·0618
·0547	·061	·059
·051	·059	·056

SA	SB	SC	SD	SE	SF	SG
·099	·099	·100	·100	·100	·100	·100
·095	·095	·095	·095	·095	·095	·095
·0915	·091	·0915	·0912	·0915	·09125	·0917
·0885	·0875	·0882	·088	·0903	·0895	·090
·086	·084	·0865	·0862	·0888	·08825	·0887
·084	·080	·0845	·0842	·087	·087	·0878
·0815	·076	·0823	·0822	·0852	·08575	·0869
·079	·072	·080	·080	·0845	·085	·0862
·0768	·0695	·079	·079	·084	·0845	·0859
·0743	·067	·078	·078	·084	·084	·0855
·072	·064	·077	·077	·084	·084	·0855
·070	·062	·076	·076	·084	·084	·0855
·068	·059	·075	·075	·084	·084	·0855
·066	·057	·074	·074	·084	·084	·0855

SH	SJ	SK	SL	SM	SN	SO
·099	·099	·099	·099	·099	·099	·100
·0952	·095	·0954	·095	·095	·095	·096
·0917	·092	·093	·092	·0915	·0915	·092
·0885	·0895	·090	·089	·0885	·0885	·089
·0865	·0875	·0867	·0867	·0855	·0865	·086
·0845	·0855	·0833	·0833	·0825	·0845	·083
·082	·0835	·080	·080	·0795	·0835	·0804
·0793	·0815	·077	·077	·0765	·082	·0778
·077	·0792	·074	·074	·0735	·080	·075
·0743	·077	·0714	·0714	·071	·078	·0743
·0722	·075	·0695	·0695	·069	·0765	·0737
·070	·073	·0676	·0676	·067	·075	·073
·068	·071	·065	·065	·065	·074	·0722
·066	·069		·063	·063	·073	

SP	SQ	SR	SS	ST	SU	SV
·099	·100	·099	·099	·099	·099	·099
·095	·095	·095	·0945	·095	·095	·0955
·0915	·0915	·092	·0905	·0925	·0992	·0923
·0892	·088	·089	·086	·0895	·0868	·089
·0871	·0854	·086	·084	·087	·0834	·0867
·0852	·083	·083	·080	·0852	·0802	·0845
·0834	·0812	·0804	·0755	·0831	·0764	·0818
·0810	·0794	·0778	·0715	·0805	·0728	·079
·0786	·0775	·075	·0655	·0787	·069	·0755
·0762	·0757	·0743	·059	·077	·0655	·072
·0738	·0738	·0737	·0535	·0753	·062	·0685
·0714	·0719	·073	·0485	·0737	·0586	·0665
·069	·070	·0722	·045	·071	·0552	·0635
·0666	·068	·0715	·042	·069	·0518	·064

SW	SX	SY	SZ
·099	·099	·099	·099
·0955	·095	·095	·0945
·0925	·0902	·091	·0903
·088	·0868	·0875	·0858
·086	·084	·0855	·0837
·084	·0808	·0825	·0798
·082	·0774	·078	·0753
·0795	·0744	·075	·0707
·077	·0713	·069	·0643
·0745	·0686	·063	·0570
·072	·0657	·0575	·0508
·0695	·063	·0525	·0470
·067	·060	·049	·0445
·0645	·0572	·046	·0420

·100 JET NEEDLES

TA	TC	TD	TE	TF	TG	TH
·099	·099	·099	·099	·099	·099	·096
·095	·095	·095	·095	·096	·095	·092
·0915	·0915	·0925	·092	·0925	·0922	·0908
·0882	·089	·090	·0895	·089	·0895	·0893
·0867	·087	·0875	·087	·0855	·0878	·0878
·0852	·085	·0845	·0837	·082	·0862	·0863
·0831	·0832	·0803	·0805	·0782	·0847	·0848
·0805	·0825	·077	·076	·0748	·0837	·0825
·0787	·0815	·073	·0715	·0714	·0827	·074
·0770	·0805	·0678	·067	·068	·0818	·065
·0753	·0795	·0631	·0625	·0645	·0812	·055
·0737	·0785	·0585	·058	·061	·0806	·049
·0710	·0775	·0538	·0535	·0575	·0800	·044
·0690	·0765	·049	·049	·054	·0794	·040

TJ	TK	TL	TM	TN	TO	TP
·099	·099	·099	·099	·099	·099	·099
·095	·095	·095	·095	·0945	·095	·0955
·092	·092	·092	·092	·091	·092	·092
·0895	·090	·089	·0894	·087	·0893	·090
·0877	·0885	·086	·0867	·085	·0865	·0875
·086	·087	·0835	·0842	·082	·0845	·0856
·0845	·086	·081	·0814	·078	·083	·0836
·084	·0855	·0793	·0785	·073	·082	·0819
·083	·0845	·0776	·0775	·0665	·081	·080
·082	·0835	·0759	·077	·060	·080	·078
·081	·0825	·0746	·077	·0535	·079	·076
·080	·0815	·0733	·077	·050	·078	·0752
·079	·0805	·072	·077	·0475	·077	·0746
·078	·0795	·071	·077	·045	·076	·074

TR	TS	TT	TU	TV	TW	TX
·099	·099	·0989	·099	·099	·099	·099
·095	·095	·0941	·095	·095	·095	·095
·092	·0915	·0904	·091	·0925	·0925	·091
·089	·088	·0883	·088	·090	·0895	·0894
·0869	·0853	·0861	·085	·088	·087	·0867
·084	·0823	·0825	·083	·086	·0852	·0842
·0817	·0812	·0799	·081	·084	·0831	·0814
·0791	·0782	·078	·0793	·0825	·0805	·0785
·0765	·0742	·0766	·0776	·081	·0775	·078
·0738	·0710	·0748	·0759	·080	·075	·078
·071	·0675	·0733	·0746	·0795	·0722	·078
·0685	·061	·0721	·0733	·0785	·070	·078
·063	·055	·0715	·072	·0775	·068	·078
·062	·049		·071	·0765	·066	·078

TY	TZ			WO2	WO3	WO4
·099	·099			·100	·100	·100
·095	·095			·095	·095	·095
·0918	·0915			·091	·091	·090
·0887	·0893			·087	·08775	·086
·086	·087			·0835	·0845	·082
·0836	·0847			·081	·0822	·0794
·0825	·0827			·0785	·080	·0768
·0805	·0805			·076	·078	·074
·0775	·0787			·0732	·0755	·0712
·075	·077			·071	·0735	·069
·0722	·0753			·0683	·0712	·066
·070	·0737			·0657	·069	·0634
·068	·071			·063	·067	·061
·066	·069			·061	·065	·058

ZB	ZC	ZD	ZE	ZF	ZG	ZH
·099	·099	·099	·099	·099	·099	·099
·095	·095	·095	·095	·095	·095	·095
·0915	·091	·090	·0895	·089	·089	·0915
·089	·088	·865	·0858	·085	·0845	·0893
·0865	·0855	·084	·083	·0821	·0815	·087
·084	·083	·0815	·0805	·0798	·079	·0847
·082	·081	·079	·0782	·0775	·0765	·082
·0795	·0785	·077	·076	·075	·074	·0795
·0775	·0765	·0745	·0732	·072	·071	·0775
·0755	·0745	·072	·0703	·0687	·0675	·0755
·0735	·0725	·069	·0673	·065	·063	·0735
·071	·0695	·065	·0629	·0608	·059	·0715
·067	·065	·0605	·0584	·0563	·054	·0695
·063	·0605	·056	·054	·052	·050	·0675
·059	·056	·0515	·0495	·0475	·045	

·125 JET NEEDLES

NA	UA	UB	UC	UD	UE	UF
·124	·124	·124	·124	·124	·124	·124
·1205	·1205	·120	·1205	·1205	·1205	·1205
·1170	·1175	·1165	·118	·1178	·1155	·1163
·1144	·1146	·113	·1153	·1158	·1135	·113
·1125	·1117	·111	·1128	·114	·1112	·1106
·1108	·1074	·109	·1107	·1126	·109	·1073
·1090	·1023	·107	·1086	·1115	·107	·1035
·1078	·0974	·1055	·107	·1104	·105	·0997
·1063	·0931	·104	·1056	·1092	·103	·0960
·1065	·0890	·103	·1046	·108	·1015	·0926
·1065	·0849	·102	·104	·1069	·100	·089
·1065	·0808	·101	·1032	·1064	·099	·0854
·1065	·0767	·100	·1025	·1058	·098	·0819
·1065	·0726	·099	·1018	·1047	·0965	·0783
·1065	·0685	·098	·101	·1036	·095	·0748
·1065	·0644	·097	·1002	·1025	·0935	·0713

·100 JET NEEDLES

TA	TC	TD	TE	TF	TG	TH
·099	·099	·099	·099	·099	·099	·096
·095	·095	·095	·095	·096	·095	·092
·0915	·0915	·0925	·092	·0925	·0922	·0908
·0882	·089	·090	·0895	·089	·0895	·0893
·0867	·087	·0875	·087	·0855	·0878	0878
·0852	·085	·0845	·0837	·082	·0862	·0863
·0831	·0832	·0803	·0805	·0782	·0847	·0848
·0805	·0825	·077	·076	·0748	·0837	·0825
·0787	·0815	·073	·0715	·0714	·0827	·074
·0770	·0805	·0678	·067	·068	·0818	·065
·0753	·0795	·0631	·0625	·0645	·0812	·055
·0737	·0785	·0585	·058	·061	·0806	·049
·0710	·0775	·0538	·0535	·0575	·0800	·044
·0690	·0765	·049	·049	·054	·0794	·040

TJ	TK	TL	TM	TN	TO	TP
·099	·099	·099	·099	·099	·099	·099
·095	·095	·095	·095	·0945	·095	·0955
·092	·092	·092	·092	·091	·092	·092
·0895	·090	·089	·0894	·087	·0893	·090
·0877	·0883	·086	·0867	·085	·0865	·0875
·086	·087	·0835	·0842	·082	·0845	·0856
·0845	·086	·081	·0814	·078	·083	·0836
·084	·0855	·0793	·0785	073	·082	·0819
·083	·0845	·0776	·0775	·0665	·081	·080
·082	·0835	·0759	·077	·060	·080	·078
·081	·0825	·0746	·077	·0535	·079	·076
·080	·0815	·0733	·077	·050	·078	·0752
·079	·0805	·072	·077	·0475	·077	·0746
·078	·0795	·071	·077	·045	·076	·074

TR	TS	TT	TU	TV	TW	TX
·099	·099	·0989	·099	·099	·099	·099
·095	·095	·0941	·095	·095	·095	·095
·092	·0915	·0904	·091	·0925	·0925	·091
·089	·088	·0883	·088	·090	·0895	·0894
·0869	·0853	·0861	·085	·088	·087	·0867
·084	·0823	·0825	·083	·086	·0852	·0842
·0817	·0812	·0799	·081	·084	·0831	·0814
·0791	·0782	·078	·0793	·0825	·0805	·0785
·0765	·0742	·0766	·0776	·081	·0775	·078
·0738	·0710	·0748	·0759	·080	·075	·078
·071	·0675	·0733	·0746	·0795	·0722	·078
·0685	·061	·0721	·0733	·0785	·070	·078
·063	·055	·0715	·072	·0775	·068	·078
·062	·049		·071	·0765	·066	·078

TY	TZ			WO2	WO3	WO4
·099	·099			·100	100	·100
·095	·095			·095	·095	·095
·0918	·0915			·091	·091	·090
·0887	·0893			·087	·08775	·086
·086	·087			·0835	·0845	·082
·0836	·0847			·081	·0822	·0794
·0825	·0827			·0785	·080	·0768
·0805	·0805			·076	·078	·074
·0775	·0787			·0732	·0755	·0712
·075	·077			·071	·0735	·069
·0722	·0753			·0683	·0712	·066
·070	·0737			·0657	·069	·0634
·068	·071			·063	·067	·061
·066	·069			·061	·065	·058

ZB	ZC	ZD	ZE	ZF	ZG	ZH
·099	·099	·099	·099	·099	·099	·099
·095	·095	·095	·095	·095	·095	·095
·0915	091	·090	·0895	·089	·089	·0915
·089	·088	·865	·0858	·085	·0845	·0893
·0865	·0855	·084	·083	·0821	·0815	·087
·084	·083	·0815	·0805	·0798	·079	·0847
·082	·081	·079	·0782	·0775	·0765	·082
·0795	·0785	·077	·076	·075	·074	·0795
·0775	·0765	·0745	·0732	·072	·071	·0775
·0755	·0745	·072	·0703	·0687	·0675	·0755
·0735	·0725	·069	·0673	·065	·063	·0735
·071	·0695	·065	·0629	·0608	·059	·0715
·067	·065	·0605	·0584	·0563	·054	·0695
·063	·0605	·056	·054	·052	·050	·0675
·059	·056	·0515	·0495	·0475	·045	

·125 JET NEEDLES

NA	UA	UB	UC	UD	UE	UP
·124	·124	·124	·124	·124	·124	·124
·1205	·1205	·120	·1205	·1205	·1205	·1205
·1170	·1175	·1165	·118	·1178	·1155	·1163
·1144	·1146	·113	·1153	·1158	·1135	·113
·1125	·1117	·111	·1128	·114	·1112	·1106
·1108	·1074	·109	·1107	·1126	·109	·1073
·1090	·1023	·107	·1086	·1115	·107	·1035
·1078	·0974	·1055	·107	·1104	·105	·0997
·1063	·0931	·104	·1056	·1092	·103	·0960
·1065	0890	·103	·1046	·108	·1015	·0926
·1065	·0849	·102	·104	·1069	·100	·089
·1065	·0808	·101	·1032	·1064	·099	·0854
·1065	·0767	100	·1025	·1058	·098	·0819
·1065	·0726	·099	·1018	·1047	·0965	·0783
·1065	·0685	·098	·101	·1036	·095	·0748
·1065	·0644	·097	·1002	·1025	·0935	·0713

·125 JET NEEDLES

UG	UH	UI	UJ	UK	UL	UM
·124	·124	·124	·124	·124	·124	·124
·1205	·1205	·1205	·1205	·1205	·1205	·1205
·116	·1165	·1172	·1165	·116	·1173	·1165
·112	·1135	·114	·1135	·113	·1140	·114
·1084	·1105	·1114	·1105	·1106	·1113	·1123
·1054	·1085	·1092	·108	·1073	·1090	·1104
·1023	·1065	·107	·1055	·1035	·1076	·1086
·099	·104	·1051	·103	·0997	·106	·107
·0954	·1015	·1032	·100	·0960	·1035	·1056
·0923	·099	·1018	·097	·0927	·1006	·1046
·0895	·0965	·1006	·094	·090	·098	·104
·0875	·094	·0995	·091	·0875	·0956	·1032
·086						
·0845	·0915	·0985	·0875	·0860	·0937	·1025
·083	·089	·0975	·0845	·0845	·0917	·1018
·0815	·0865	·0965	·0815	·0830	·0897	·101
	·084	·0955	·080	·0815	·0877	·1002

UN	UO	UP	UR	US	UT	UU
·124	·124	·124	·124	·124	·124	·124
·1205	·1205	·1205	·1205	·1205	·1205	·1205
·1165	·1155	·116	·116	·1172	·1147	·1165
·113	·1135	·114	·1128	·1133	·1114	·114
·110	·110	·1105	·1094	·1105	·1084	·112
·107	·108	·1075	·106	·1092	·1054	·1095
·104	·1055	·1045	·103	·1085	·1023	·107
1005	·103	·1025	·0997	·1068	·0990	·105
·0985	·101	·101	·096	·1043	·0954	·1025
·0965	·0985	·0995	·0927	·102	·0917	·100
·0945	·0965	·0985	·090	·1006	·088	·099
·0915	·094	·0975	·0875	·0995	·0858	·098
·0885	·093	·096	·0860	·0985	·0836	·097
	·0915	·0945	·0845	·0975	·0813	·096
·0855	·090	·093	·083	·0965	·079	·0945
·0830	·089	·0915	·0815	·0955	·0768	·093
·0805						

UV	UW	UX	UY	UZ		
·124	·124	·124	·124	·124		
·1205	·1205	·1205	·1205	·1205		
·1182	·1175	·1165	·1174	·1172		
·1160	·1146	·114	·1145	·1135		
·1135	·1117	·112	·1128	·1113		
·1112	·1074	·1095	·1107	·1095		
·1095	·1023	·107	·1086	·1084		
·108	·0974	·105	·107	·1066		
·1065	·092	·1025	·1056	·1048		
·1053	·0865	·100	·1046	·103		
·1047	·081	·099	·104	·102		
·1042	·0755	·098	·1032	·101		
·1036	·070	·0955	·1025	·100		
·1029	·064	·0931	·1018	·099		
·1029	·058	·091	·101	·098		
·1029	·052	·089	·1002	·097		

VA UVA	VB UVB	VC UVC	VD UVD	VE UVE	VF UVF	VG UVG
·124	·124	·124	·124	·124	·124	·124
·1188	·1188	·1188	·1184	·1178	·1172	·1166
·1145	·1145	·1145	·1135	·1125	·1114	·1103
·111	·111	·111	·1096	·108	·1063	·1047
·108	·108	·108	·106	·104	·102	·100
·1061	·1056	·1052	·103	·1008	·0985	·0962
·1044	·1034	·1025	·100	·0975	·095	·0925
·1025	·101	·0997	·097	·0943	·0915	·0887
·1006	·0986	·097	·094	·091	·088	·085
·0987	·0964	·0943	·091	·0877	·0845	·0813
·0968	·094	·0915	·088	·0846	·081	·0775
·095	·0917	·0888	·0852	·0814	·0775	·0737
·0932	·0895	·086	·0822	·078	·074	·070
·0913	·0872	·0833	·079	·075	·0715	·0662
·0895	·0848	·0805	·076	·0715	·067	·0625
·0875	·0825	·0777	·0732	·0685	·0635	·0586

VH UVH	VI UVI	VJ UVJ	VK UVK	VL UVL	VM UVM	VN UVN
·124	·124	·124	·124	·124	·124	·124
·116	·1154	·1146	·1134	·1122	·1122	·1122
·109	·1077	·1065	·1046	·103	·103	·103
·103	·1015	·0997	·0997	·0956	·0946	·0946
·098	·096	·094	·092	·090	·088	·087
·094	·0917	·0895	·0874	·085	·0827	·080
·090	·0875	·085	·0825	·080	·0775	·0734
·086	·0833	·0805	·0778	·075	·0722	·067
·082	·079	·076	·073	·070	·0668	·0604
·078	·0748	·0715	·0684	·065	·0615	·055
·074	·0715	·067	·0635	·060	·0563	·0494
·070	·0662	·0625	·0588	·055	·051	·044
·066	·062	·058	·054	·050	·0457	·039
·062	·0577	·0535	·0493	·045	·0405	·034
·058	·0535	·049	·0445	·040	·035	·0295
·054	·0492	·0445	·0396	·035	·030	·025

VO UVO	VP UVP		VR UVR	VT UVT		ZA
·124	·124		·124	·125		·099
·121	·121		·119	·121		·095
·117	·117		·1145	·116		·0905
·113	·113		·1108	·1115		·0875
·110	·110		·1073	·107		·0847
·1075	·107		·1038	·103		·0822
·105	·104		·1004	·099		·080
·1022	·100		·097	·095		·0778
·0995	·0965		·0925	·091		·0758
097	·093		·088	·087		·0737
·0935	·089		·0835	·084		·071
·0895	·0855		·079	·081		·0675
·0855	·082		·076	·0775		·063
·082	·0782		·073	·0745		·0585
·078	·0745		·070	·072		·054
·074	·0707		·067	·069		

NOTE.—'V' Series, $\frac{5}{32}$" 'UV' Series, $\frac{1}{4}$" shank

·125 JET NEEDLES

25 U25	35 U35	45 U45	50 U50	59 U59	60 U60	70 U70
·124	·124	·124	·124	·124	·124	·125
·123	·123	·123	·117	·116	·117	·119
·116	·116	·116	·111	·111	·111	·113
·109	·109	·109	·104	·106	·104	·1085
·100	·100	·101	·099	·101	·099	·104
·092	·092	·094	·092	·096	·094	·0995
·084	·085	·089	·086	·091	·089	·095
·076	·078	·082	·080	·087	·084	·0905
·067	·071	·076	·073	·083	·0795	·086
·059	·064	·070	·068	·079	·075	·081
·051	·057	·064	·062	·075	·070	·077
·042	·050	·057	·056	·071	·065	·072
·034	·042	·051	·050	·067	·060	·068
·025	·035	·045	·044	·063	·055	·063
			·038	·059	·050	·059

74 U74	75 U75	76 U76	78 U78	79 U79		O1 UO1
·124	·125	·124	·124	·124		·124
·117	·119	·117	·117	·1178		·123
·112	·113	·112	·112	·1147		·1175
·108	·1087	·109	·109	·1115		·1115
·104	·105	·1055	·107	·1084		·1065
·100	·1101	·1022	·104	·1053		·1015
·097	·097	·099	·101	·1022		·097
·094	·093	·0958	·0978	·0991		·092
·090	·089	·0924	·094	·096		·087
·087	·085	·0892	·091	·093		·082
·084	·081	·086	·088	·090		·0775
·081	·077	·083	·085	·087		·0725
·078	·073	·080	·082	·084		·0675
·076	·069	·078	·080	·082		·063
·074	·065	·076	·078	·080		·058
·072		·074	·076	·078		

NOTE: Numbered Series, ·156" shank, 'U' Series ,·125 shank

ANGLO AMERICAN

Electrical & Carburettor Services Ltd.
134 Norwood Road,
London, S.E.24

Tel: 01-674 4477

REPLACEMENT S.U. CONVERSIONS

Replacement downdraught carburetters Prices from 5 gns.

ZENITH — SOLEX — CARTER — WEBER — STROMBERG

FOR FURTHER DETAILS FILL IN THIS FORM AND POST TO:

NAME .....

ADDRESS .....

.....

MAKE OF CAR, MODEL & YEAR .....

TYPE OF CARB FITTED .....

WESTERN SERVICES (BRISTOL) LTD **Tel: 0272 551558**

Shaftsbury Buildings · Kingsland Road · St. Philips · Bristol 2

The simplest thing in the world to lower the cost of motoring

The Colortune Diagnostic plug makes it easy to correct faults and achieve optimum performance on any car.

A recent survey showed it could save 15% on fuel costs.

I would like to read what Motor, Engineering, Motor Cycle and Ford write about Colortune.

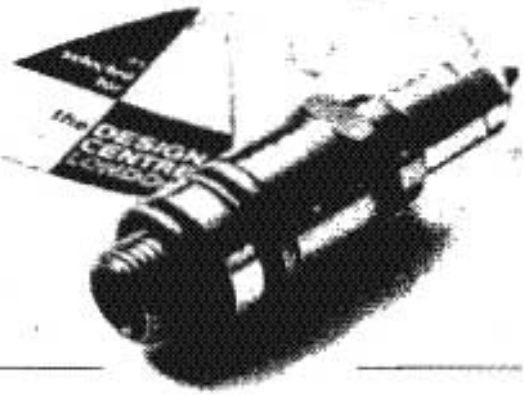

Name .....

Address .....

.....

Colortune

Colortune, 66 Royal Mint Street, London, E.1. Tel: 01-480 7561

S.U.1