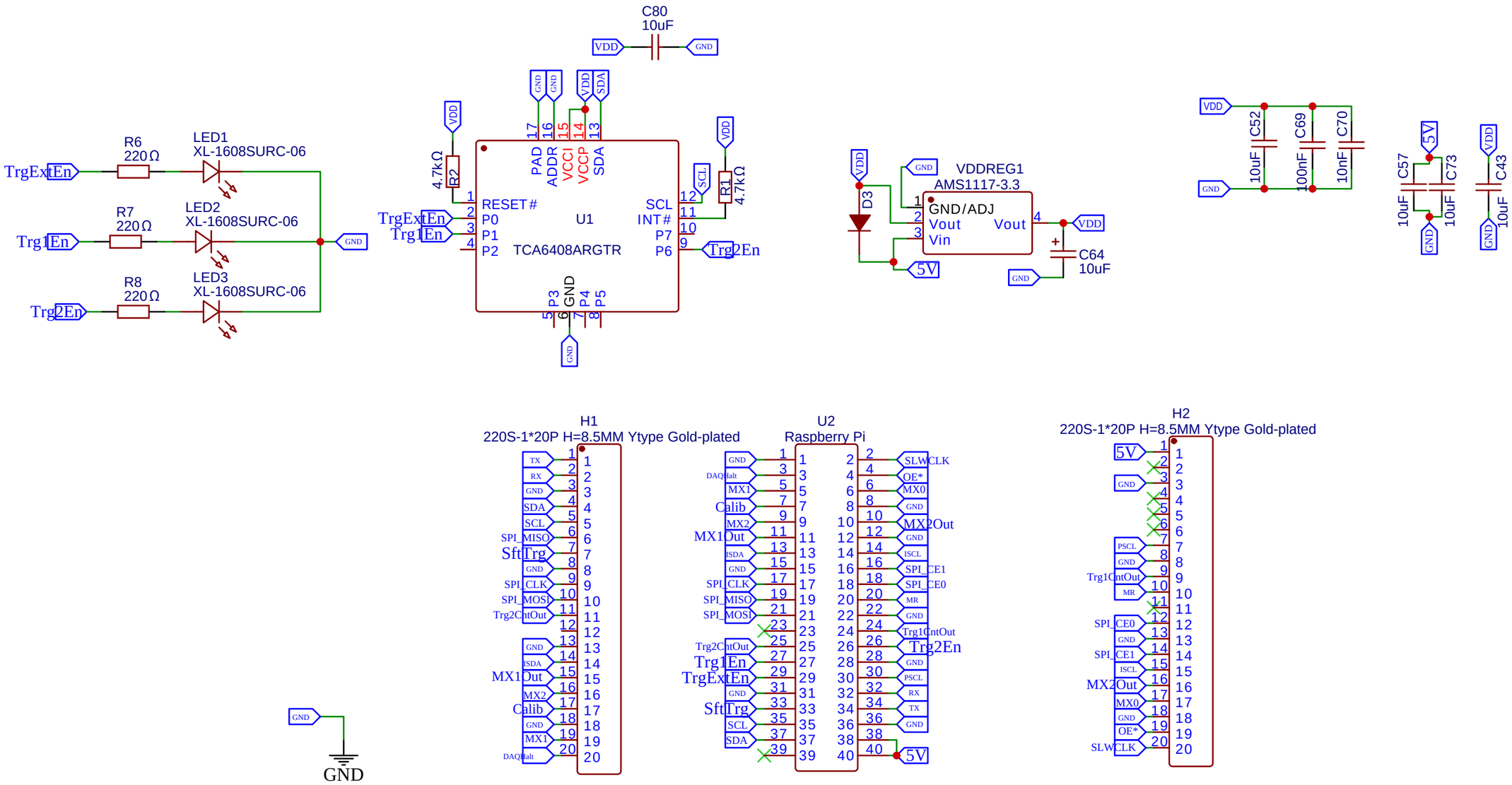

Note that the RPI nets are flipped since it is going on the bottom side of the PCB

TITLE: Pico DiRPi Hat	REV: 1.0
Company: Univ. of Calif. Santa Barbara	Sheet: 1/1
Date: 2023-06-16 Drawn By: eliottschaffer	