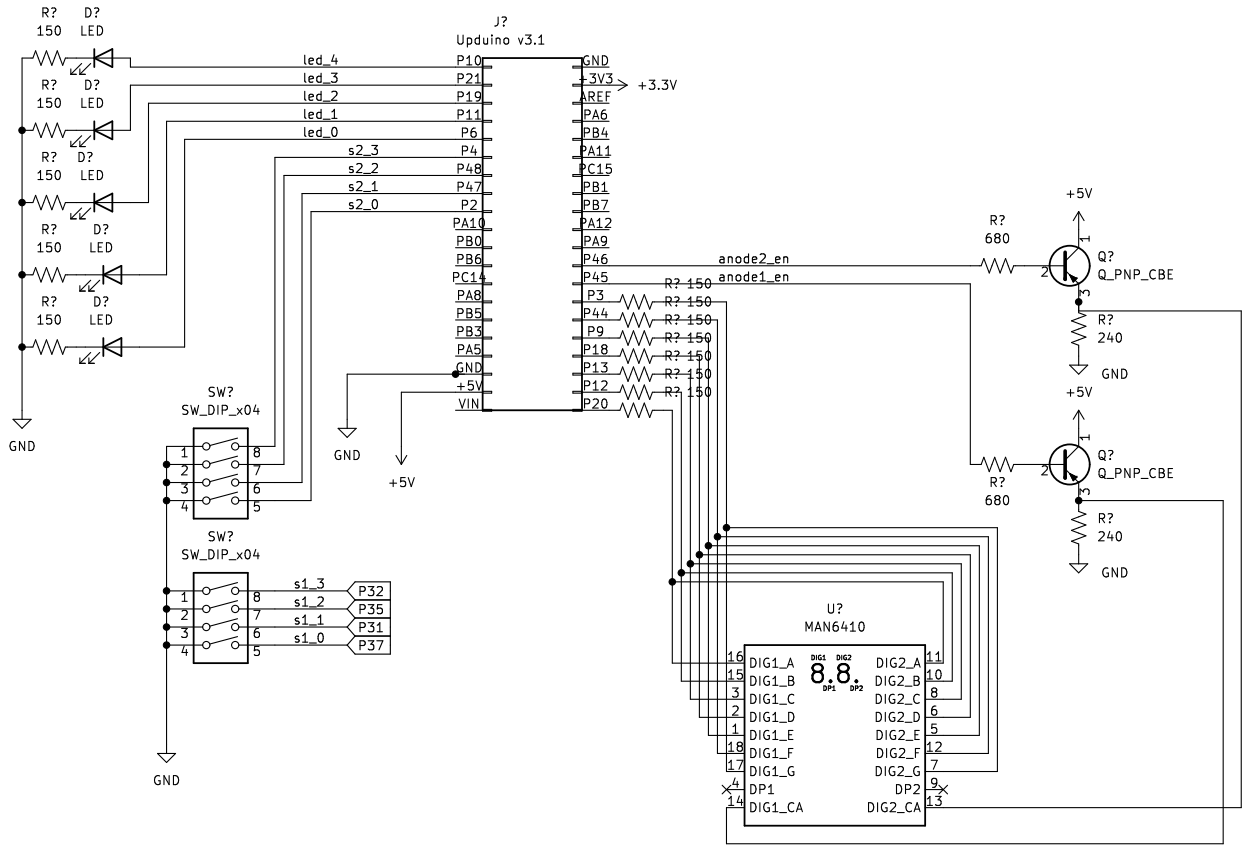

Ellie Sundheim (esundheim@hmc.edu)

HMC E155 Fall 2024

Sheet: /

File: lab2.kicad_sch

Title: Lab 2 Schematic

Size: A4	Date:	**Rev:**
KiCad E.D.A. kicad (6.0.10)		Id: 1/1