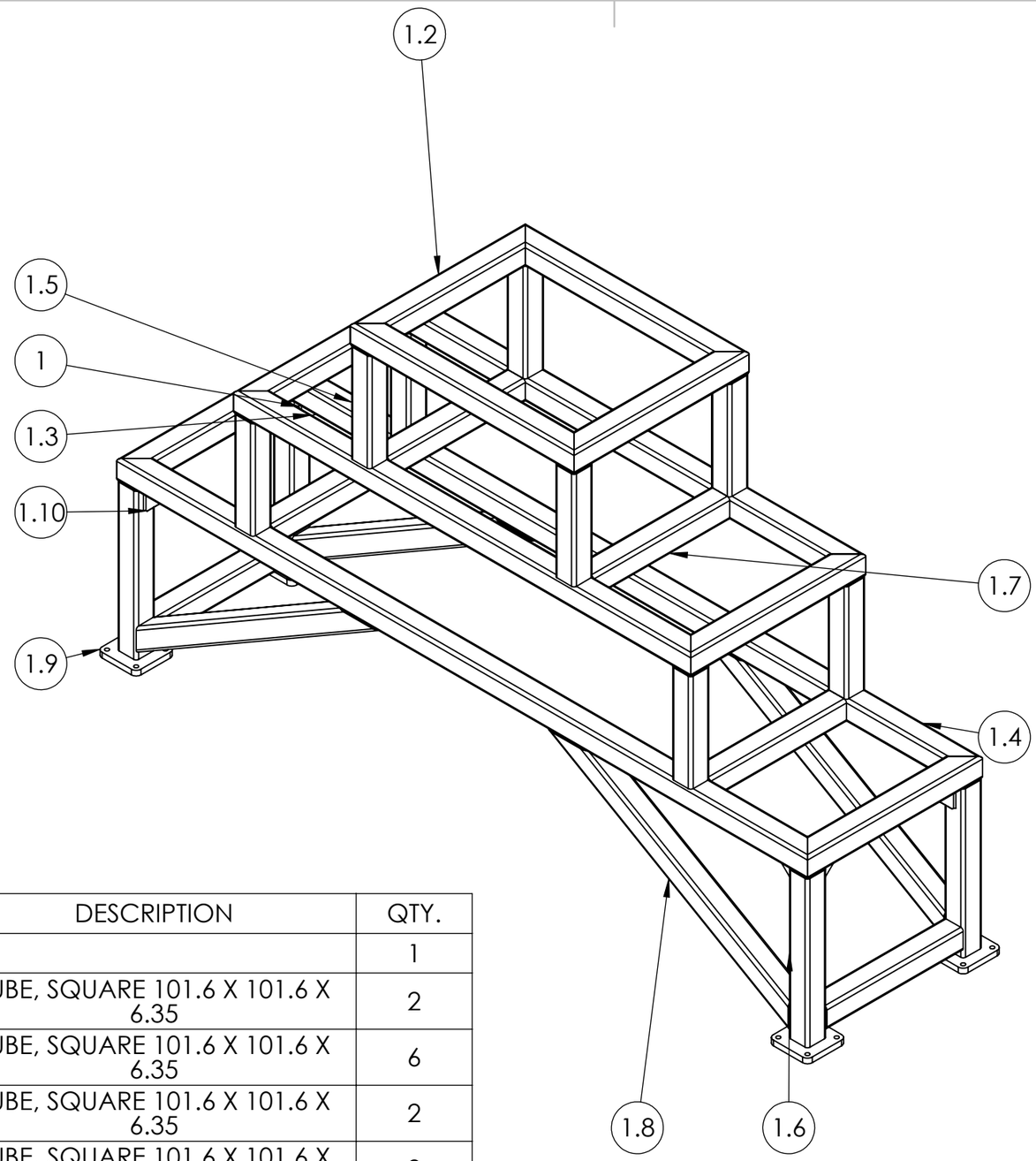

ITEM NO.	PART NUMBER	DESCRIPTION	QTY.
1	Weldment Frame-3		1
1.1		TUBE, SQUARE 101.6 X 101.6 X 6.35	2
1.2		TUBE, SQUARE 101.6 X 101.6 X 6.35	6
1.3		TUBE, SQUARE 101.6 X 101.6 X 6.35	2
1.4		TUBE, SQUARE 101.6 X 101.6 X 6.35	2
1.5		TUBE, SQUARE 101.6 X 101.6 X 6.35	8
1.6		TUBE, SQUARE 101.6 X 101.6 X 6.35	4
1.7		TUBE, SQUARE 101.6 X 101.6 X 6.35	6
1.8		TUBE, SQUARE 101.6 X 101.6 X 6.35	4
1.9			4
1.10			8

UNLESS OTHERWISE SPECIFIED:
DIMENSIONS ARE IN MILLIMETERS
SURFACE FINISH:
TOLERANCES:
LINEAR:
ANGULAR:

FINISH:

DEBURR AND BREAK SHARP EDGES

DO NOT SCALE DRAWING

REVISION

	NAME	SIGNATURE	DATE
DRAWN	Ellie Tun		11/09
CHK'D			
APPV'D			
MFG			
Q.A			

TITLE:

MATERIAL:

WEIGHT:

DWG NO. Weldment Frame-3

A3

SCALE:1:50

SHEET 1 OF 1