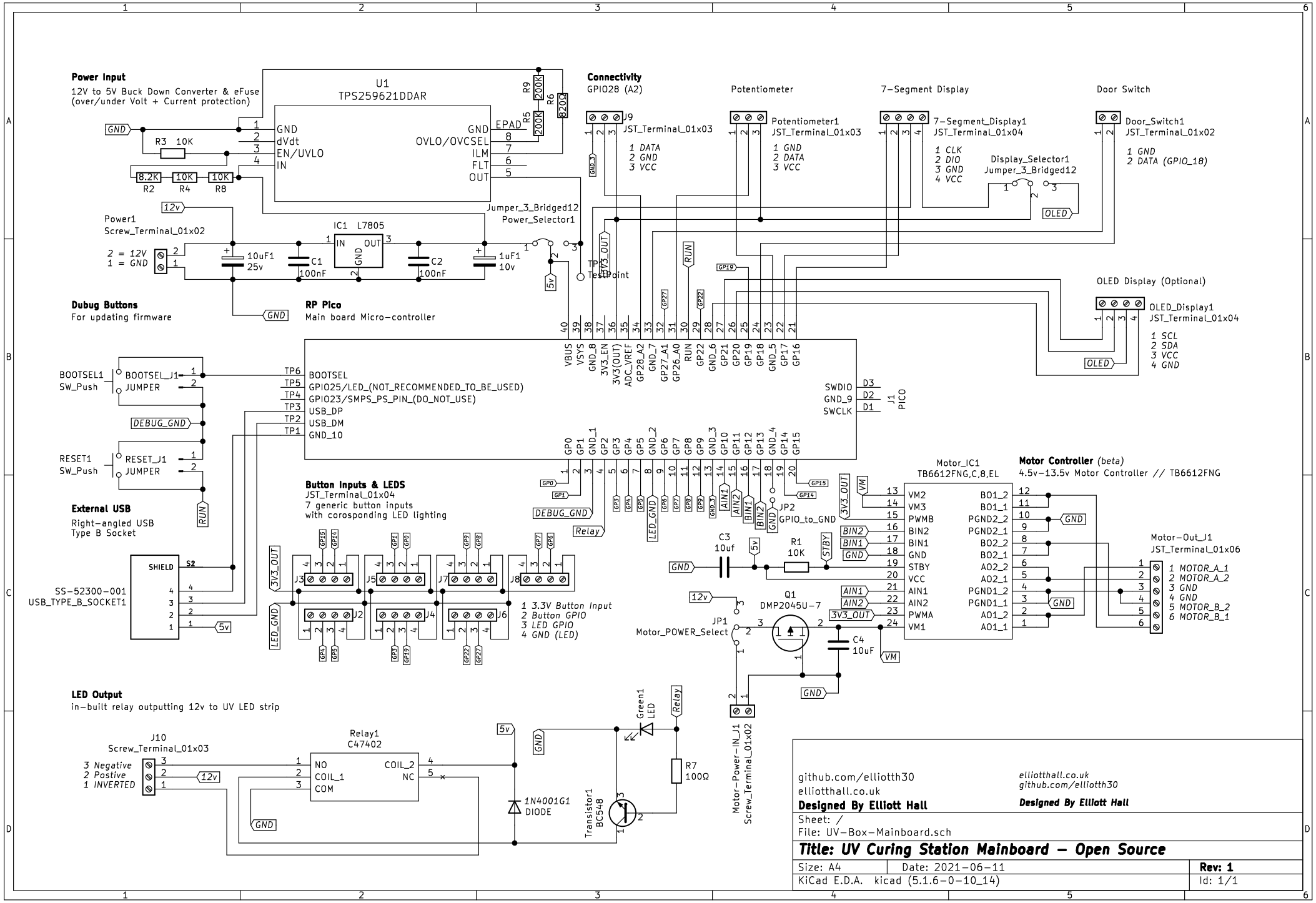
Power Input
12V to 5V Buck Down Converter & eFuse
(over/under Volt + Current protection)
U1
TPS259621DDAR
GND
dVdt
EN/UVLO
IN
EPAD
OVLO/OVCSEL
ILM
FLT
OUT
R9 200K
R5 200K
R6 820Ω
R3 10K
R2 8.2K
R4 10K
R8 10K
Power1
Screw_Terminal_01x02
2 = 12V
1 = GND
IC1 L7805
10uF1
25v
C1
100nF
C2
100nF
1uF1
10v
Jumper_3_Bridged12
Power_Selector1
TP
Testpoint
Connectivity
GPIO28 (A2)
J9
JST_Terminal_01x03
1 DATA
2 GND
3 VCC
Potentiometer
Potentiometer1
JST_Terminal_01x03
1 GND
2 DATA
3 VCC
7-Segment Display
7-Segment_Display1
JST_Terminal_01x04
1 CLK
2 DIO
3 GND
4 VCC
Display_Selector1
Jumper_3_Bridged12
Door Switch
Door_Switch1
JST_Terminal_01x02
1 GND
2 DATA (GPIO_18)
OLED Display (Optional)
OLED_Display1
JST_Terminal_01x04
1 SCL
2 SDA
3 VCC
4 GND
Dubug Buttons
For updating firmware
RP Pico
Main board Micro-controller
VBUS
VSYS
GND_8
3V3_EN
3V3(OUT)
ADC_VREF
GP28_A2
GND_7
GP27_A1
GP26_A0
RUN
GP22
GND_6
GP21
GP20
GP19
GP18
GND_5
GP17
GP16
TP6 BOOTSEL
TP5 GPIO25/LED_(NOT_RECOMMENDED_TO_BE_USED)
TP4 GPIO23/SMPS_PS_PIN_(DO_NOT_USE)
TP3 USB_DP
TP2 USB_DM
TP1 GND_10
SWDIO
GND_9
SWCLK
J1
PICO
BOOTSEL1
SW_Push
BOOTSEL_J1
JUMPER
RESET1
SW_Push
RESET_J1
JUMPER
External USB
Right-angled USB
Type B Socket
SS-52300-001
USB_TYPE_B_SOCKET1
SHIELD
Button Inputs & LEDS
JST_Terminal_01x04
7 generic button inputs
with corosponding LED lighting
1 3.3V Button Input
2 Button GPIO
3 LED GPIO
4 GND (LED)
JP2
GPIO_to_GND
C3
10uf
R1
10K
Motor_IC1
TB6612FNG,C,8,EL
VM2
VM3
PWMB
BIN2
BIN1
GND
STBY
VCC
AIN1
AIN2
PWMA
VM1
BO1_2
BO1_1
PGND2_2
PGND2_1
BO2_2
BO2_1
AO2_2
AO2_1
PGND1_2
PGND1_1
AO1_2
AO1_1
Motor Controller (beta)
4.5v-13.5v Motor Controller // TB6612FNG
Motor-Out_J1
JST_Terminal_01x06
1 MOTOR_A_1
2 MOTOR_A_2
3 GND
4 GND
5 MOTOR_B_2
6 MOTOR_B_1
Q1
DMP2045U-7
JP1
Motor_POWER_Select
C4
10uF
Motor-Power-IN_J1
Screw_Terminal_01x02
LED Output
in-built relay outputting 12v to UV LED strip
J10
Screw_Terminal_01x03
3 Negative
2 Postive
1 INVERTED
Relay1
C47402
NO
COIL_1
COM
COIL_2
NC
1N4001G1
DIODE
Transistor1
BC548
R7
100Ω
Green1
LED
github.com/elliotth30
elliotthall.co.uk
Designed By Elliott Hall
elliotthall.co.uk
github.com/elliotth30
Designed By Elliott Hall
Sheet: /
File: UV-Box-Mainboard.sch
Title: UV Curing Station Mainboard - Open Source
Size: A4
Date: 2021-06-11
Rev: 1
KiCad E.D.A. kicad (5.1.6-0-10_14)
Id: 1/1