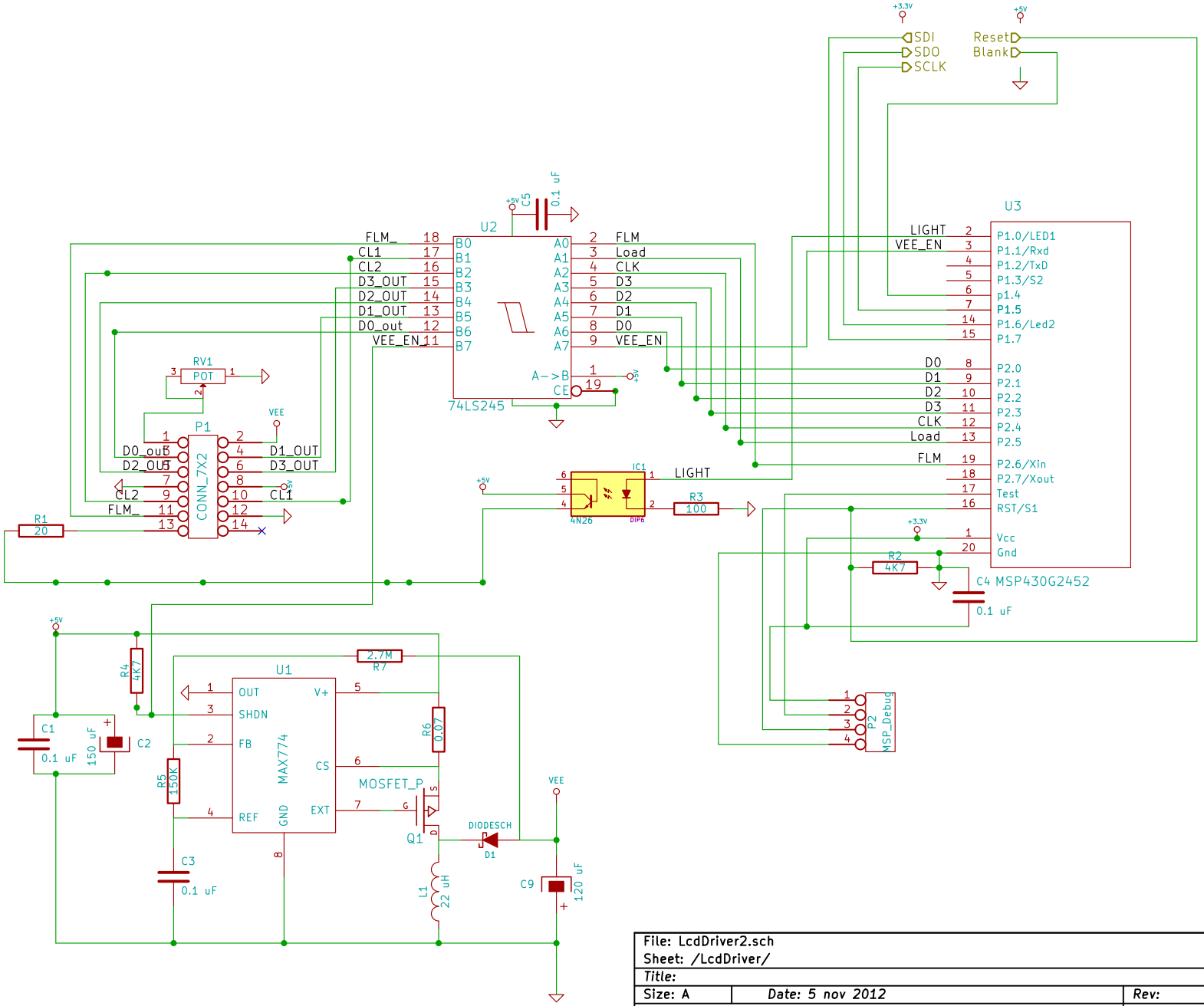

File: LcdDriver2.sch		
Sheet: /LcdDriver/		
Title:		
Size: A	Date: 5 nov 2012	Rev:
KiCad E.D.A.		Id: 2/2