ZAPOJENÍ NAPÁJENÍ DESKY

PROGRAMOVACÍ ROZHRANÍ

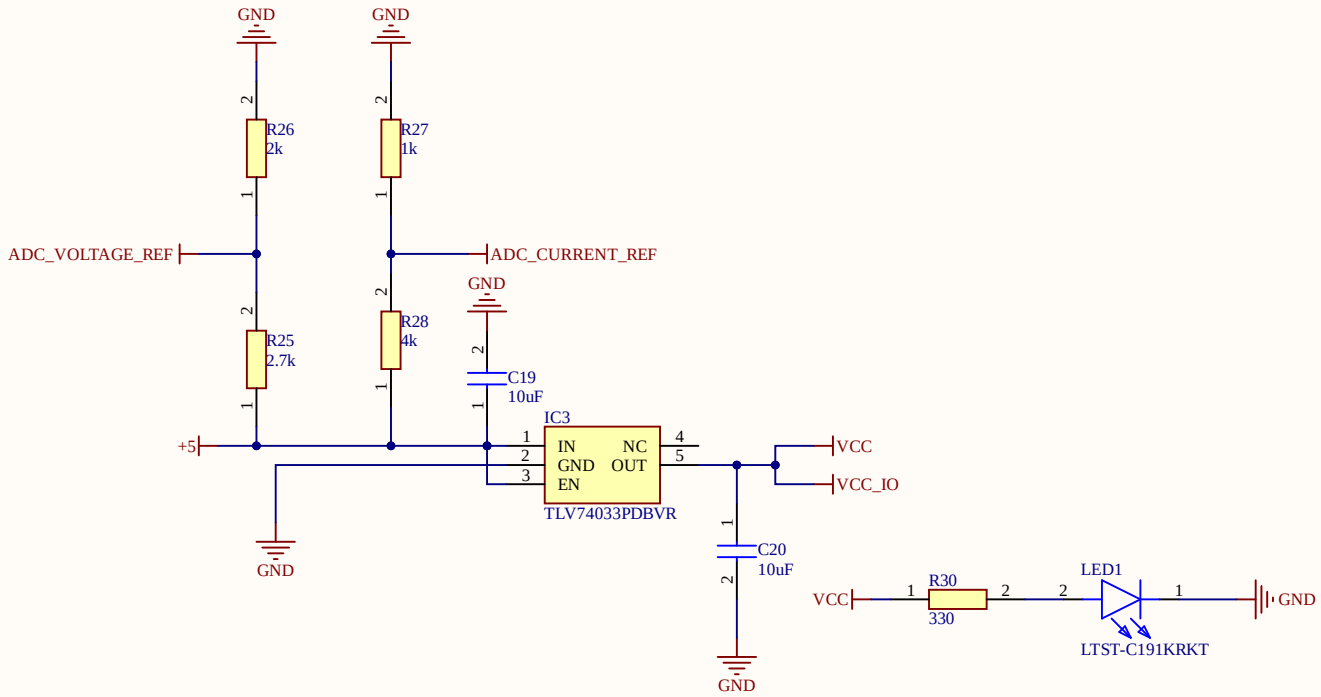

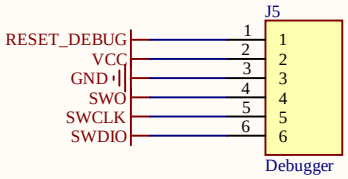

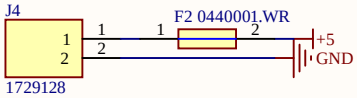

Title		
Size A4	Number	Revision
Date: 3/09/2024		Sheet of
File: C:\Users\..\power.SchDoc		Drawn By:

ZAPOJENÍ ETHERNET KONEKTORU

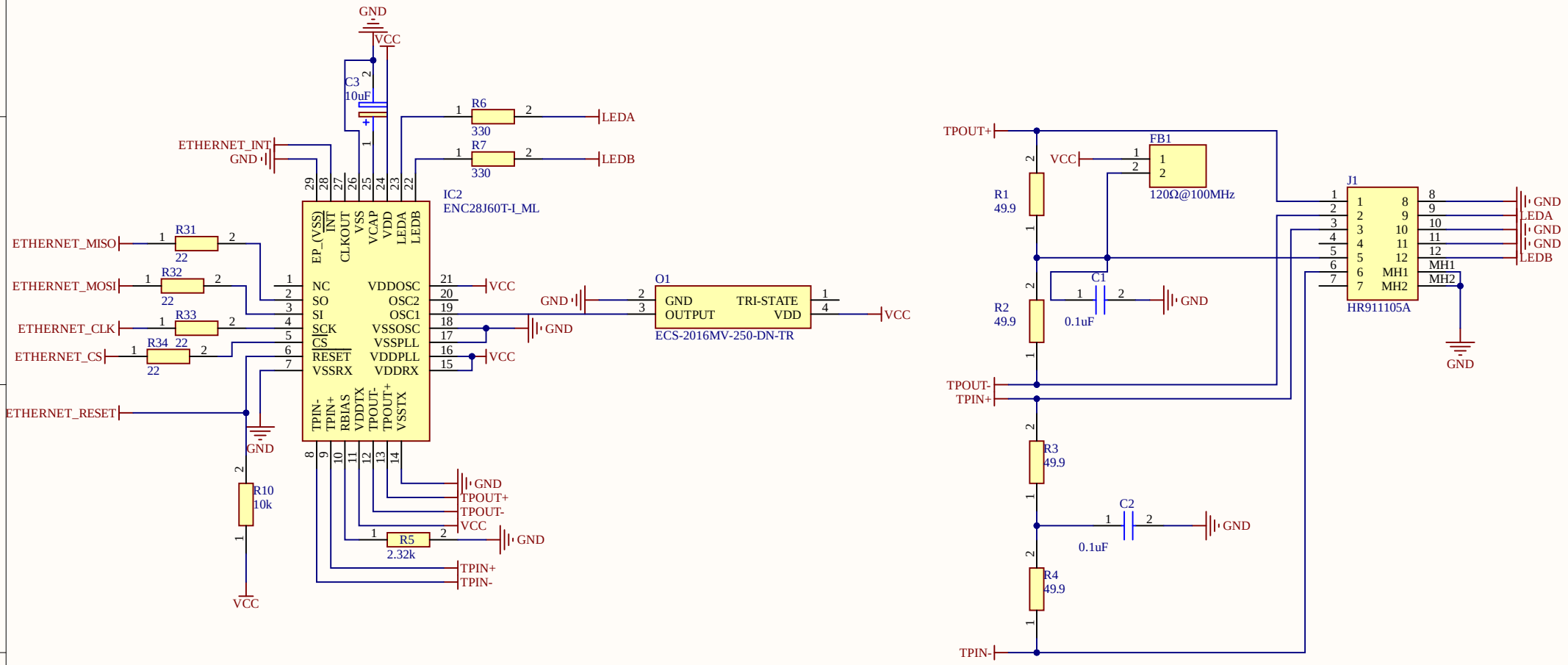

Title		
Size A4	Number	Revision
Date: 3/09/2024		Sheet of
File: C:\Users\..\ethernet-schema.SchDoc		Drawn By:

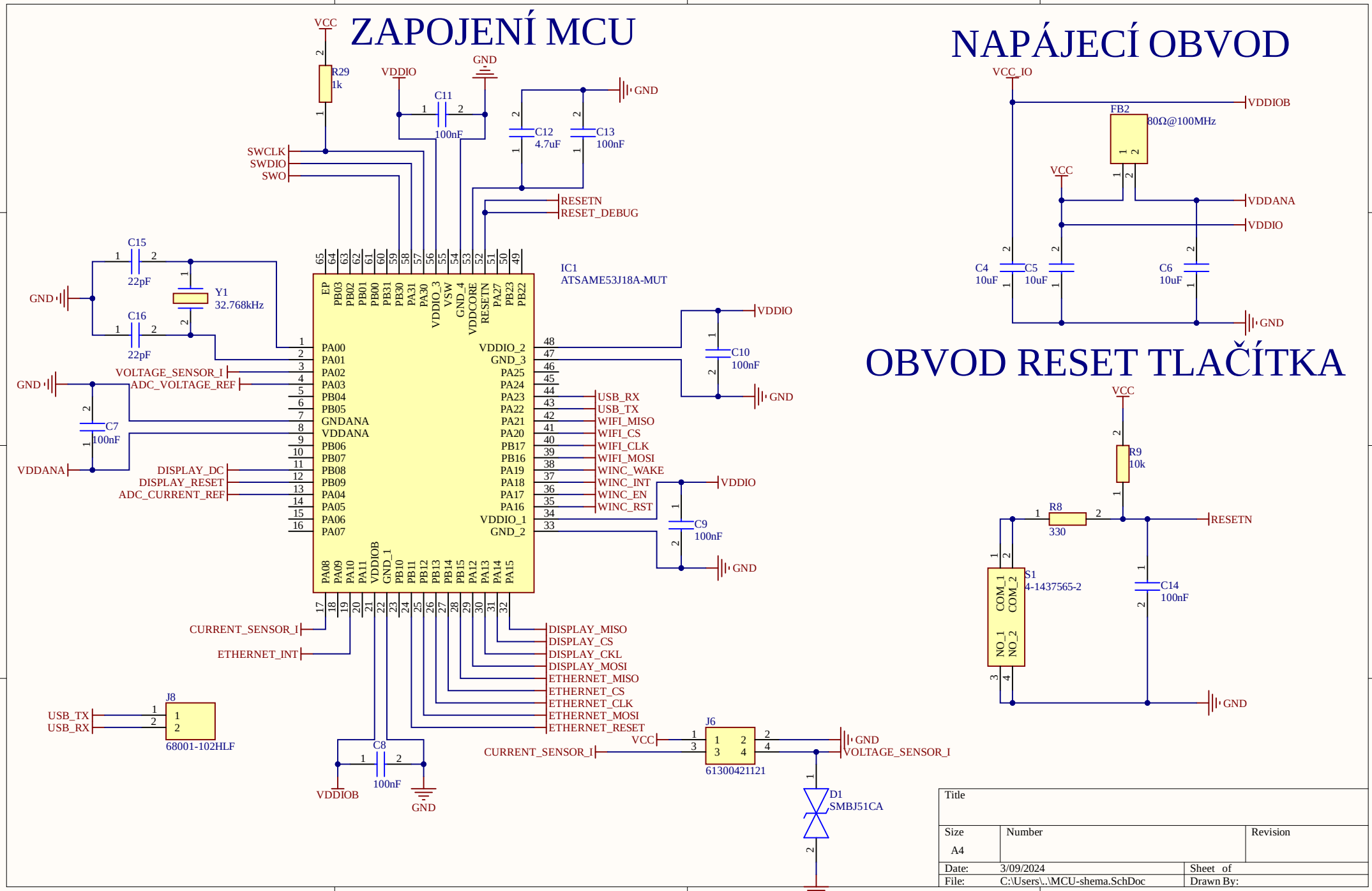
ZAPOJENÍ MCU
NAPÁJECÍ OBVOD
OBVOD RESET TLAČÍTKA
IC1
ATSAME53J18A-MUT
R29
1k
C11
100nF
C12
4.7uF
C13
100nF
C15
22pF
C16
22pF
Y1
32.768kHz
C7
100nF
C10
100nF
C9
100nF
C8
100nF
J8
68001-102HLF
J6
61300421121
D1
SMBJ51CA
FB2
80Ω@100MHz
C4
10uF
C5
10uF
C6
10uF
R9
10k
R8
330
S1
4-1437565-2
C14
100nF
SWCLK
SWDIO
SWO
RESETN
RESET_DEBUG
VOLTAGE_SENSOR_I
ADC_VOLTAGE_REF
DISPLAY_DC
DISPLAY_RESET
ADC_CURRENT_REF
USB_RX
USB_TX
WIFI_MISO
WIFI_CS
WIFI_CLK
WIFI_MOSI
WINC_WAKE
WINC_INT
WINC_EN
WINC_RST
CURRENT_SENSOR_I
ETHERNET_INT
DISPLAY_MISO
DISPLAY_CS
DISPLAY_CKL
DISPLAY_MOSI
ETHERNET_MISO
ETHERNET_CS
ETHERNET_CLK
ETHERNET_MOSI
ETHERNET_RESET
VOLTAGE_SENSOR_I
VCC
VDDIO
GND
VDDANA
VDDIOB
VCC_IO
Title
Size
A4
Number
Revision
Date: 3/09/2024
Sheet of
File: C:\Users\..\MCU-shema.SchDoc
Drawn By:

ZAPOJENÍ DISPLEJE

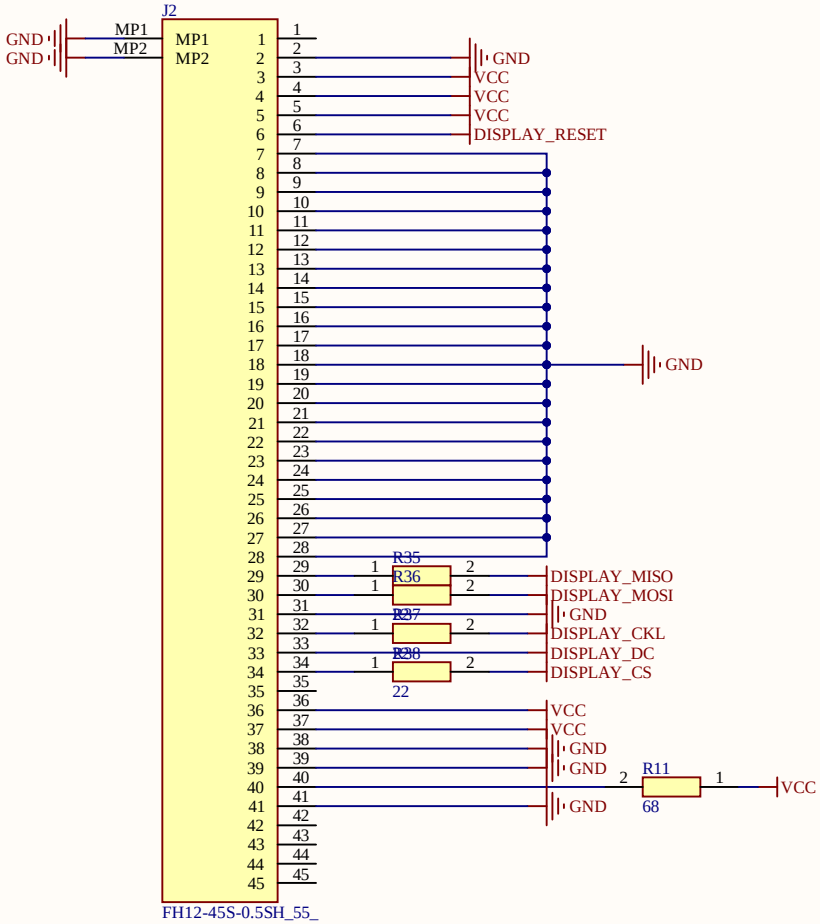

Title		
Size A4	Number	Revision
Date: 3/09/2024		Sheet of
File: C:\Users\..\Display.SchDoc		Drawn By:

ZAPOJENÍ WIFI MODULU

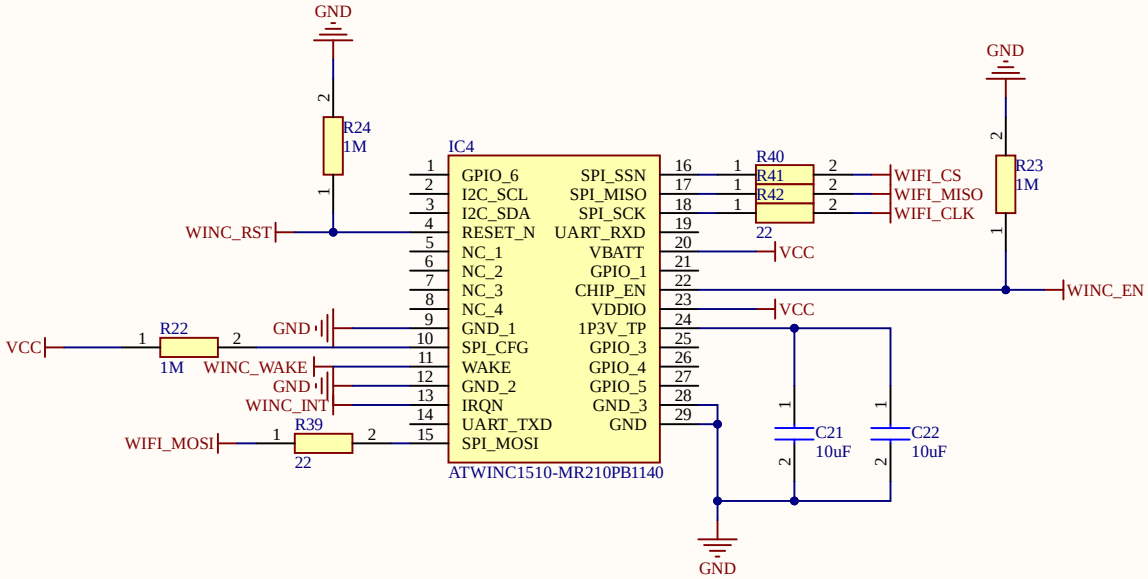

Title		
Size A4	Number	Revision
Date: 3/09/2024		Sheet of
File: C:\Users\..\Wifi-schema.SchDoc		Drawn By:

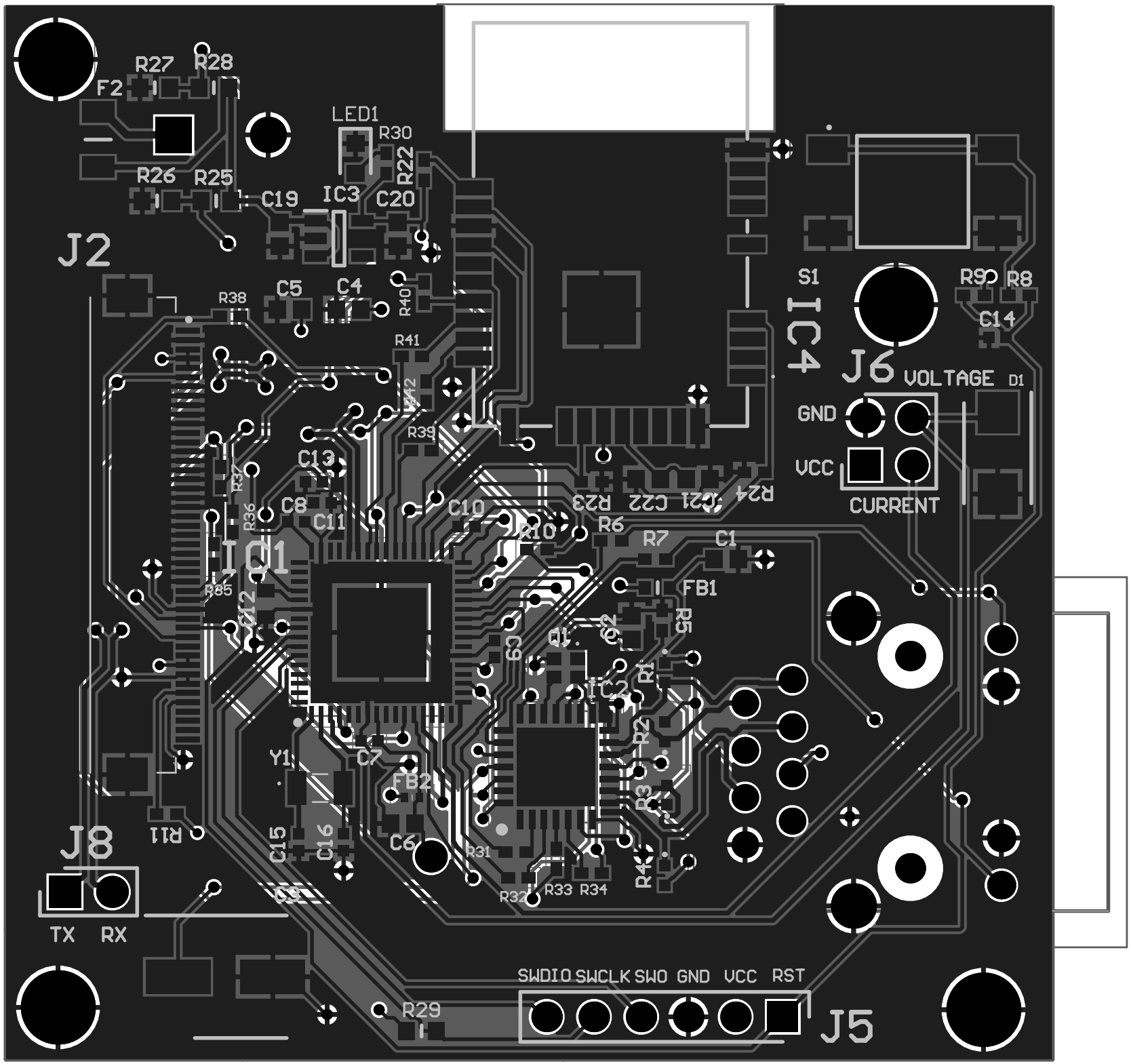
R27
R28
F2
LED1
R30
R22
R26
R25
C19
IC3
C20
J2
R38
C5
C4
R40
R41
R42
R39
C13
R37
R36
C8
C11
C10
Q1
R35
C12
R10
R6
R7
C1
FB1
R5
C9
Q1
IC2
R1
R2
R3
R4
Y1
C7
FB2
C15
C16
C6
R31
R32
R33
R34
R11
J8
TX
RX
R29
SWDIO SWCLK SWO GND VCC RST
J5
S1
IC4
R9
R8
C14
J6
VOLTAGE
D1
GND
VCC
CURRENT
R23
C22
C21
R24