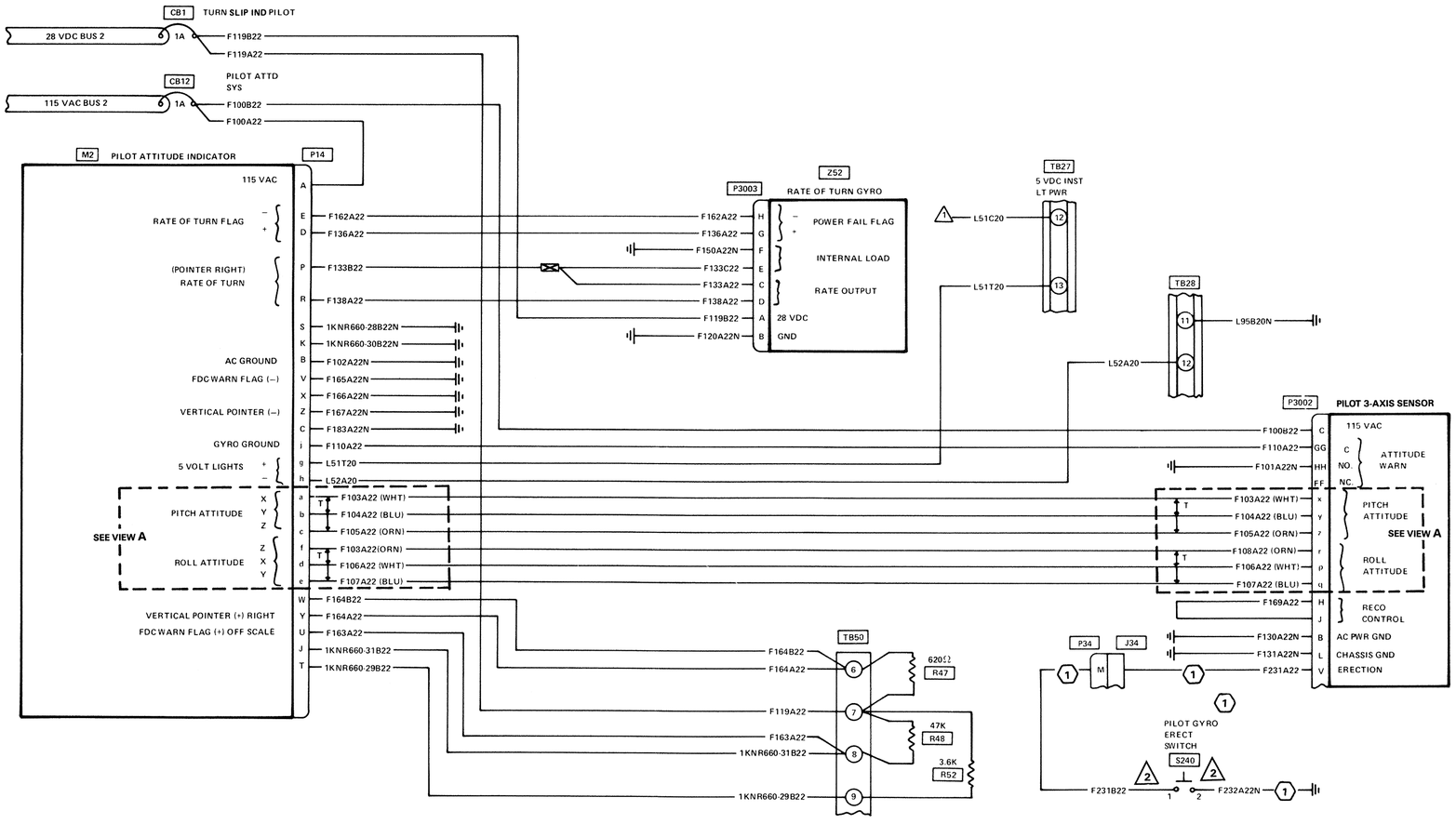

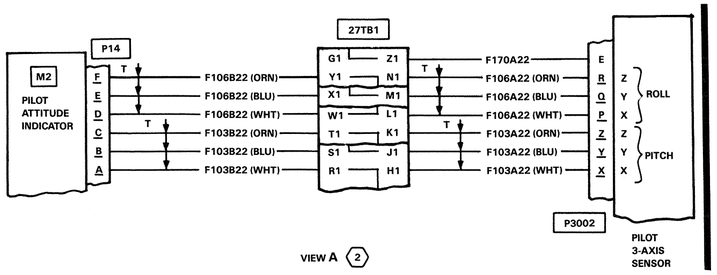

NOTES

1. REFER TO PILOT INSTRUMENT LIGHTS.
2. STOWED, IF KIT IS NOT INSTALLED.
3. REFER TO FLIGHT DATA RECORDER.

EFFECTIVITY

1. 30680 THROUGH 30795.
2. 35048 AND SUBSEQUENT

212-M-98-28
212-475-021M

Figure 98-28. Pilot attitude system (S/N 30597 and subsequent)