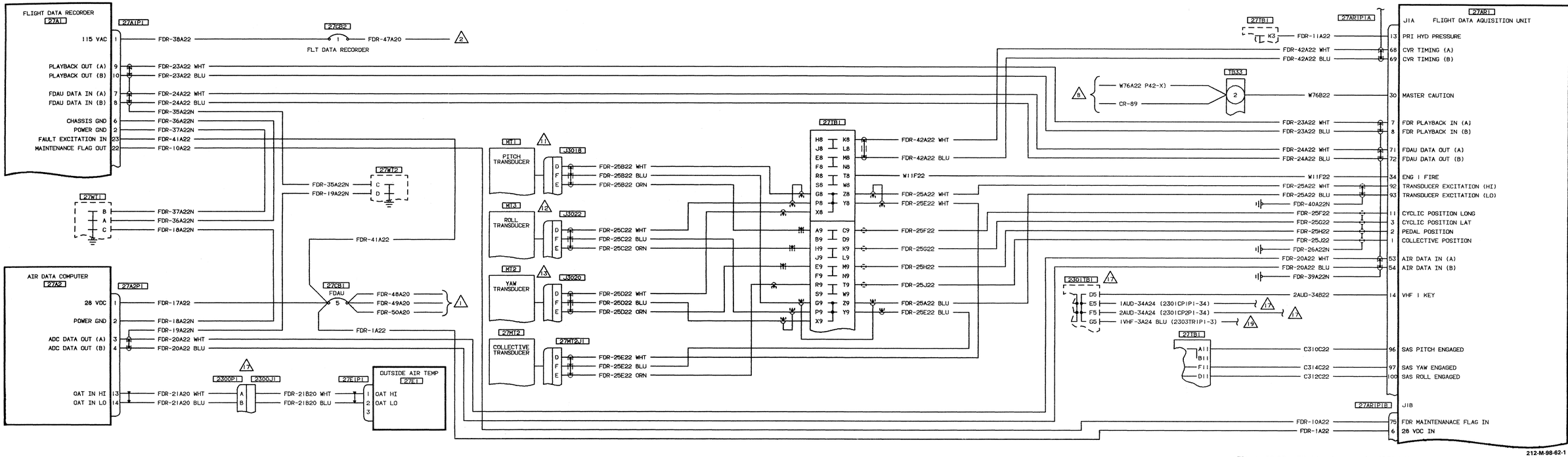

212-M-98-62-1

Figure 98-62. Flight data recorder (S/N 35048 and subsequent) (Sheet 1 of 3)

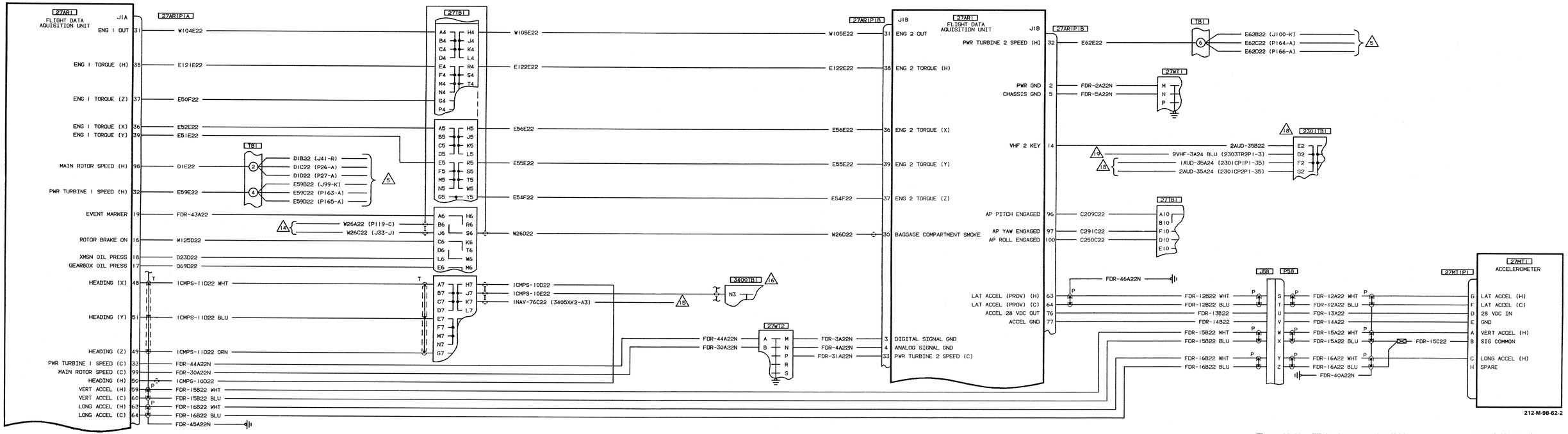

Figure 98-62. Flight data recorder (S/N 35048 and subsequent) (Sheet 2)

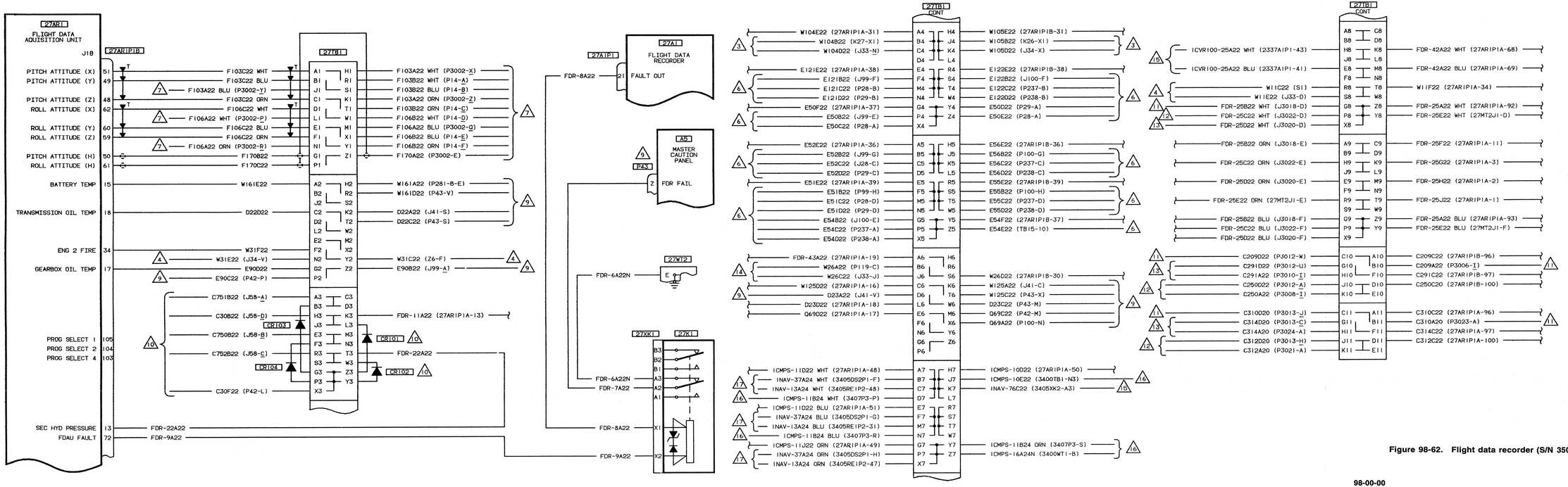

Figure 98-62. Flight data recorder (S/N 35048 and subsequent) (Sheet 3)