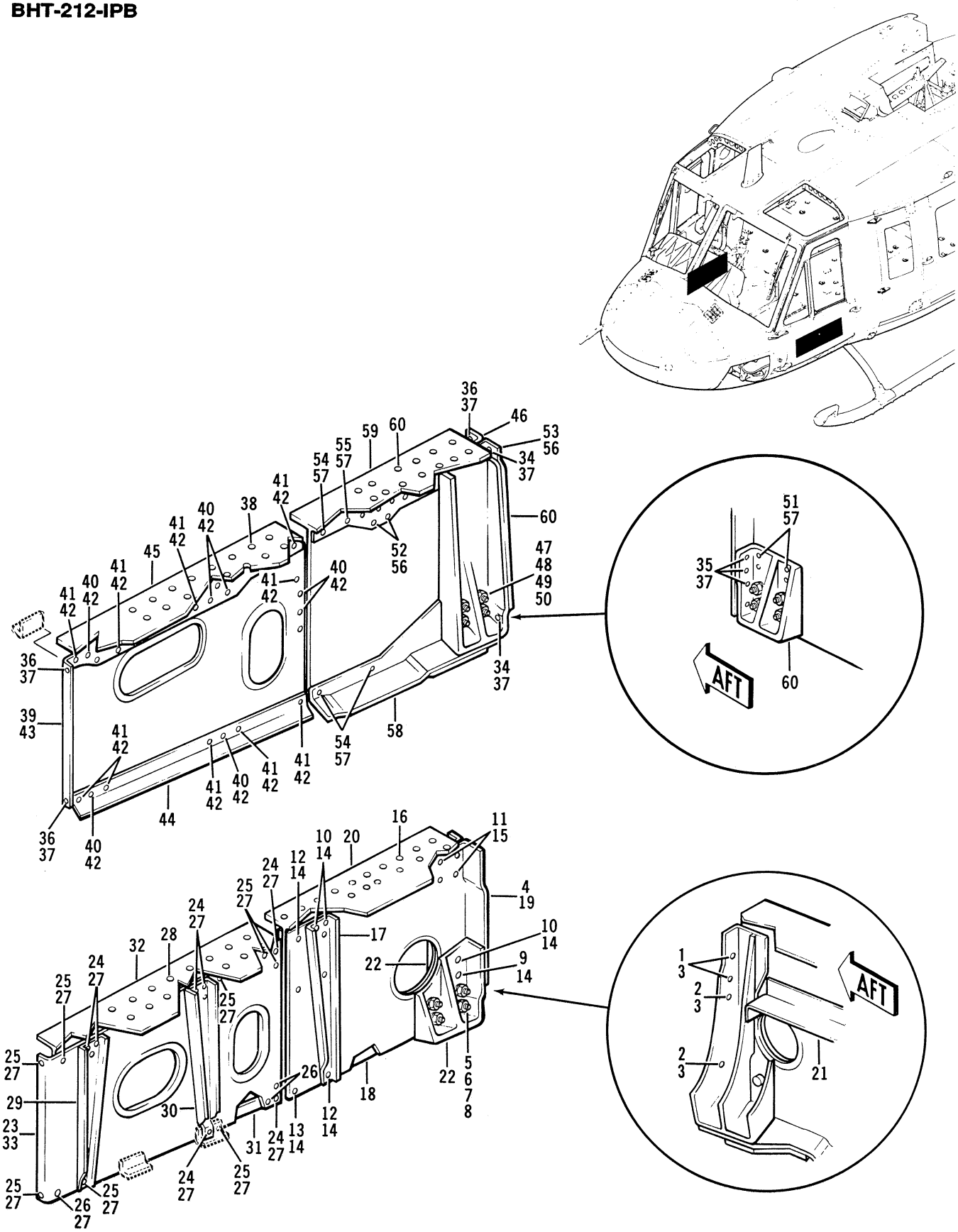

Figure 53-49. Support installation, seat track