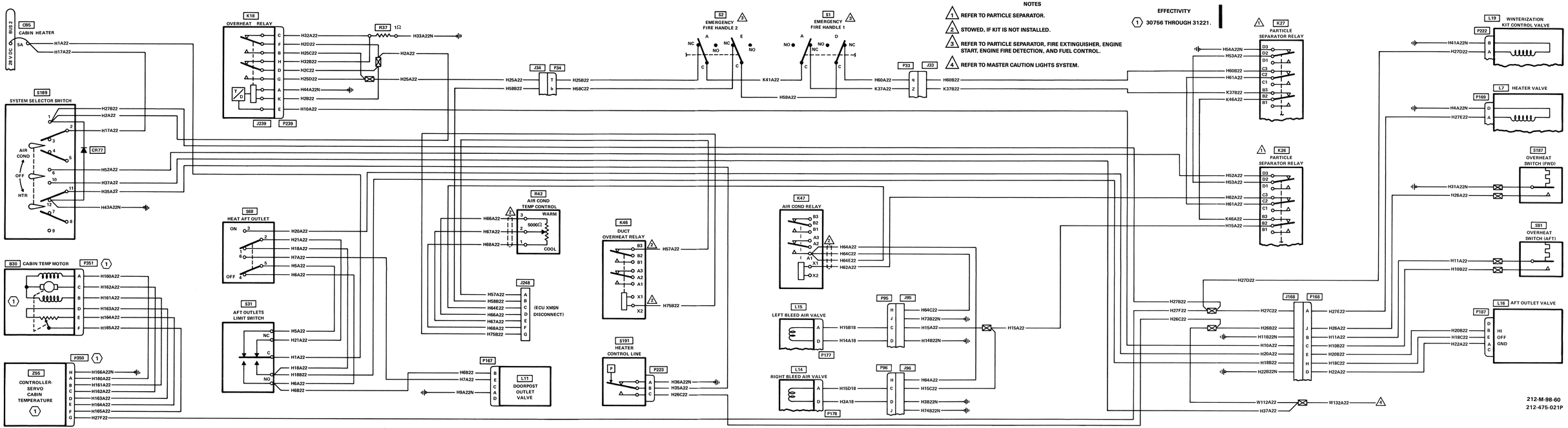

Figure 98-60. Heater/air conditioning (S/N 30597 and subsequent)