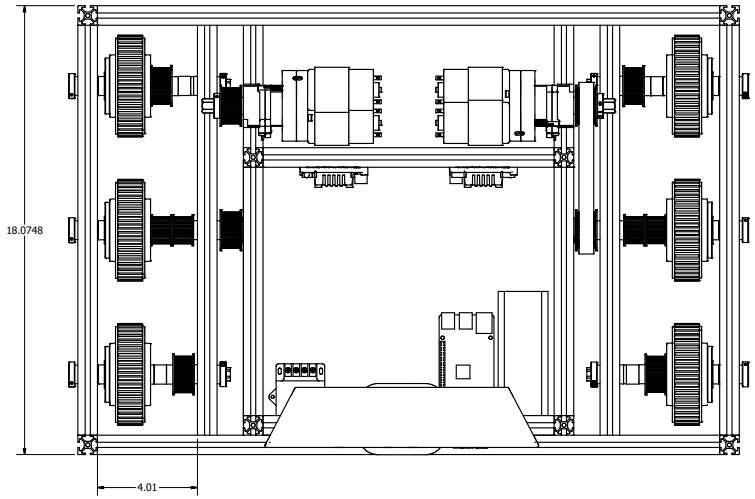

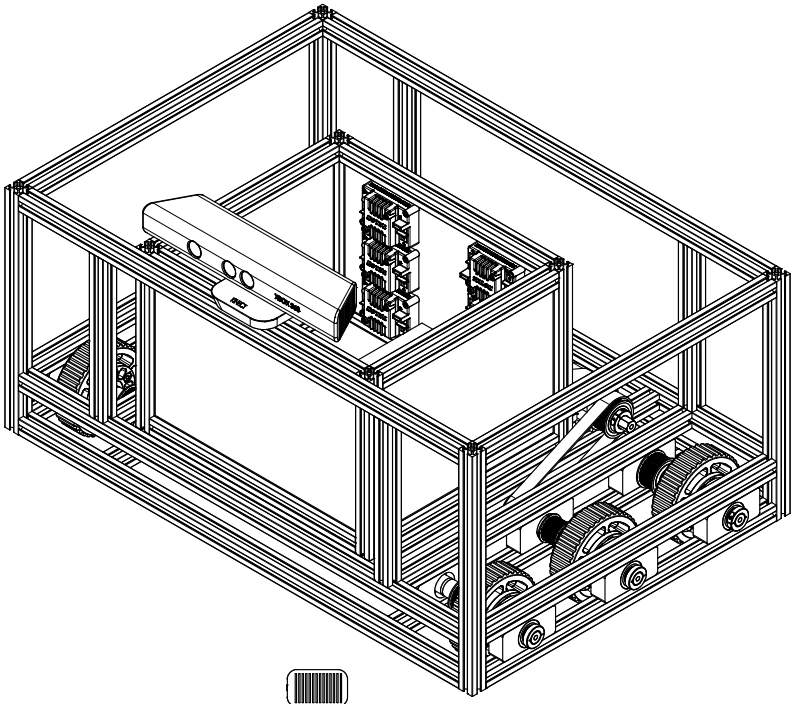

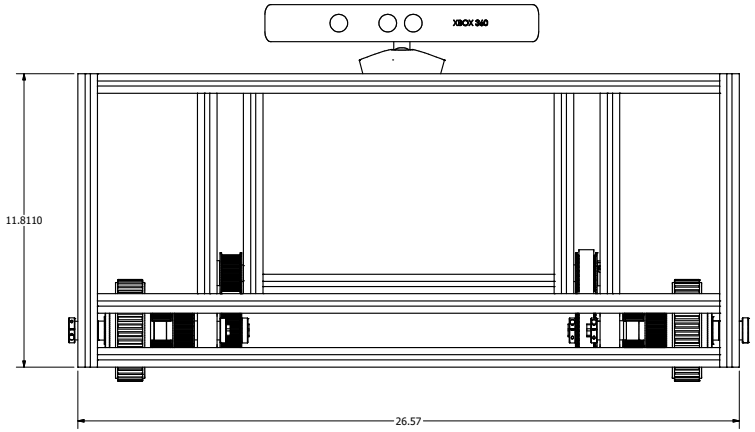

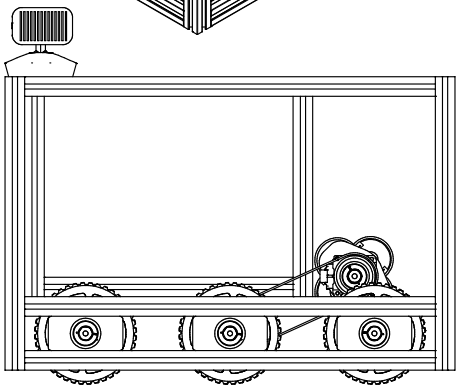

DRAWN snipe	1/18/2019	
CHECKED		TITLE
QA		
MFG		
APPROVED		SIZE D / DWG NO ClarkBodyV3 / REV
		SCALE 1:2.5 / SHEET 1 OF 1