US012226134B2

(12) **United States Patent**
O'Brien, II et al.

(10) **Patent No.: US 12,226,134 B2**
(45) **Date of Patent: Feb. 18, 2025**

(54) **RIGID STERNAL FIXATION**

(71) Applicant: **Zimmer Biomet CMF and Thoracic, LLC**, Jacksonville, FL (US)

(72) Inventors: **Todd Shay O'Brien, II**, Jacksonville, FL (US); **Ely Lucas Knowles**, Jacksonville, FL (US); **Max Holland Billard**, Jacksonville, FL (US); **Adam Webster Hausman**, Jacksonville, FL (US); **Saddy Rodolfo Garcia**, St. Augustine, FL (US)

(73) Assignee: **Zimmer Biomet CMF and Thoracic, LLC**, Jacksonville, FL (US)

(*) Notice: Subject to any disclaimer, the term of this patent is extended or adjusted under 35 U.S.C. 154(b) by 106 days.

(21) Appl. No.: **17/592,142**

(22) Filed: **Feb. 3, 2022**

(65) **Prior Publication Data**

US 2022/0249144 A1 Aug. 11, 2022

Related U.S. Application Data

(60) Provisional application No. 63/147,409, filed on Feb. 9, 2021.

(51) **Int. Cl.**
A61B 17/82 (2006.01)
A61B 17/17 (2006.01)
(Continued)

(52) **U.S. Cl.**
CPC ***A61B 17/823*** (2013.01); ***A61B 17/1789*** (2016.11); ***A61B 17/8861*** (2013.01); *A61B 2017/00407* (2013.01)

(58) **Field of Classification Search**
CPC A61B 17/82; A61B 17/823; A61B 17/826; A61B 17/8861; A61B 17/1789;
(Continued)

(56) **References Cited**

U.S. PATENT DOCUMENTS

3,739,429 A * 6/1973 Kohke ..... B65D 63/1054 24/16 PB
4,910,831 A * 3/1990 Bingold ..... E05B 75/00 292/307 R
(Continued)

FOREIGN PATENT DOCUMENTS

JP 2024505722 A 2/2024
JP 7499422 B2 6/2024
(Continued)

OTHER PUBLICATIONS

"International Application Serial No. PCT/US2022/015097, International Search Report mailed May 24, 2022", 7 pgs.
(Continued)

Primary Examiner — Matthew J Lawson
(74) *Attorney, Agent, or Firm* — SCHWEGMAN LUNDBERG & WOESSNER, P.A.

(57) **ABSTRACT**

An anchor assembly, for securing a first portion and a second portion of a separated sternum, can include a lock, an anchor, and a cerclage. The anchor can include a body locatable between the first portion and the second portion of the sternum, where the body can define an end portion. The anchor can include a collar connected to the body and extending outward from the end portion of the body. The collar can engage an outer surface of the sternum to limit movement of the body beyond the outer surface of the sternum. The cerclage can be connected to and can extend from the anchor. The cerclage can be configured to at least partially surround the first portion and the second portion of the separated sternum.

12 Claims, 10 Drawing Sheets

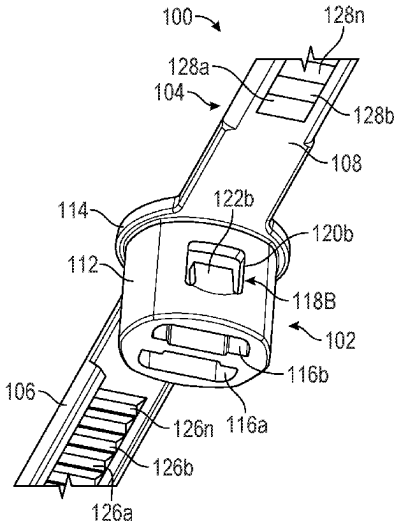

(51) **Int. Cl.**
A61B 17/88 (2006.01)
A61B 17/00 (2006.01)

(58) **Field of Classification Search**
CPC A61B 17/1792; A61B 17/842; B65D 2563/00; B65D 2563/10; B65D 2563/101; B65D 2563/102; B65D 2563/103; B65D 2563/104; B65D 2563/105; B65D 2563/106; B65D 2563/107; B65D 2563/108
USPC ..... 24/16 PB
See application file for complete search history.

(56) **References Cited**

U.S. PATENT DOCUMENTS

5,330,489	A	7/1994	Green et al.	
5,356,417	A	10/1994	Golds	
5,462,542	A	10/1995	Alesi, Jr.	
5,571,105	A	11/1996	Gundolf	
5,802,888	A *	9/1998	Parsons	E05B 75/00 24/16 PB
6,045,572	A	4/2000	Johnson et al.	
6,196,033	B1 *	3/2001	Dowdle	E05B 75/00 24/16 PB
7,437,804	B1 *	10/2008	Geiger	F16L 3/237 248/74.3
8,460,345	B2	6/2013	Steger et al.	
8,685,027	B2 *	4/2014	Chico Roca	A61B 17/8061 606/70
9,585,705	B2	3/2017	Koch et al.	
9,643,764	B1 *	5/2017	Huang	B65D 63/1072
10,179,011	B2	1/2019	Garfein et al.	
10,329,062	B2 *	6/2019	Lee	B65D 63/1063
10,745,182	B1 *	8/2020	Reznar	B65D 63/1072
2002/0104196	A1 *	8/2002	Geiger	B65D 63/1072 24/16 PB
2003/0153947	A1	8/2003	Koseki	
2005/0076478	A1 *	4/2005	Miyazaki	B65D 63/1063 24/16 PB
2005/0240189	A1	10/2005	Rousseau et al.	
2010/0179600	A1	7/2010	Steger et al.	
2010/0229350	A1 *	9/2010	Kostal	E05B 75/00 24/16 PB
2011/0022050	A1 *	1/2011	McClellan	A61B 17/823 606/228
2011/0106153	A1	5/2011	Stone et al.	
2011/0295257	A1	12/2011	Mcclellan et al.	
2012/0041441	A1	2/2012	Bernstein et al.	
2012/0197257	A1	8/2012	Knueppel	
2013/0261625	A1 *	10/2013	Koch	A61B 17/1691 606/74
2014/0088655	A1	3/2014	Stone et al.	
2014/0142576	A1	5/2014	Shipley	
2014/0155895	A1	6/2014	Mcclellan et al.	
2014/0277175	A1	9/2014	Campbell et al.	
2014/0309699	A1	10/2014	Houff	
2015/0066029	A1	3/2015	Zeitani	
2015/0342657	A1	12/2015	Voisard et al.	
2019/0119018	A1 *	4/2019	Chmelar	B65D 63/1072

FOREIGN PATENT DOCUMENTS

WO	WO-2012114360	A1	8/2012
WO	WO-2022173651	A1	8/2022

OTHER PUBLICATIONS

"International Application Serial No. PCT/US2022/015097, Written Opinion mailed May 24, 2022", 9 pgs.
"International Application Serial No. PCT/US2022/015097, International Preliminary Report on Patentability mailed Aug. 24, 2023", 11 pgs.
"Australian Application Serial No. 2022219047, First Examination Report mailed Apr. 24, 2024", 4 pgs.
"Australian Application Serial No. 2022219047, Respone Filed Jul. 4, 2024 to First Examination Report mailed Apr. 24, 2024", 20 pgs.
"Australian Application Serial No. 2022219047, Subsequent Examination Report mailed Jul. 5, 2024", 4 pgs.
"European Application Serial No. 22705304.8, Response Filed Mar. 20, 2024 to Communication pursuant to Rules 161(1) and 162 EPC mailed Sep. 20, 2023", 14 pgs.

* cited by examiner

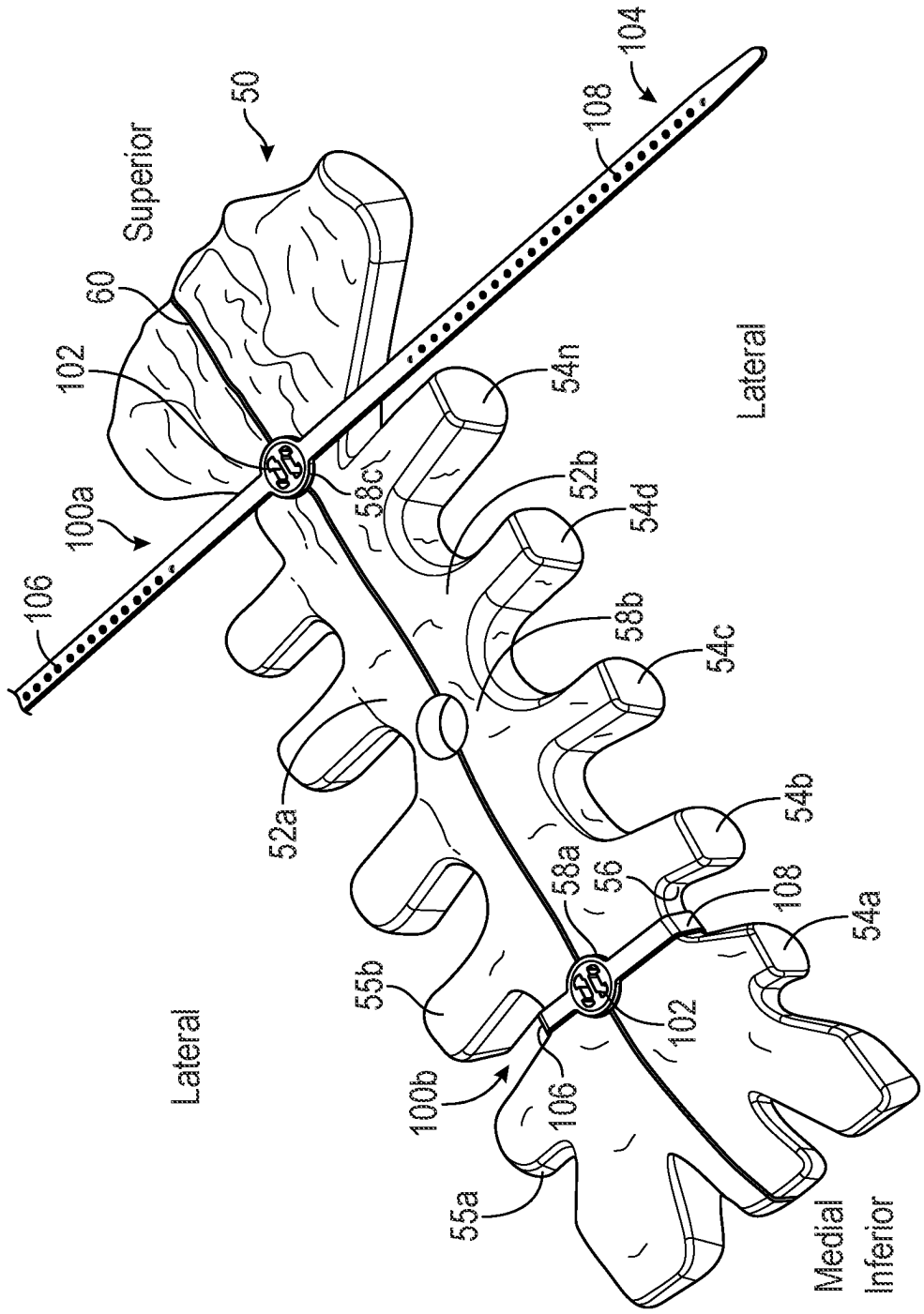
50
Superior
60
102
100a
106
104
108
54n
58c
52b
54d
58b
54c
52a
54b
58a
56
108
54a
55b
102
100b
106
55a
Lateral
Lateral
Medial
Inferior

FIG. 1

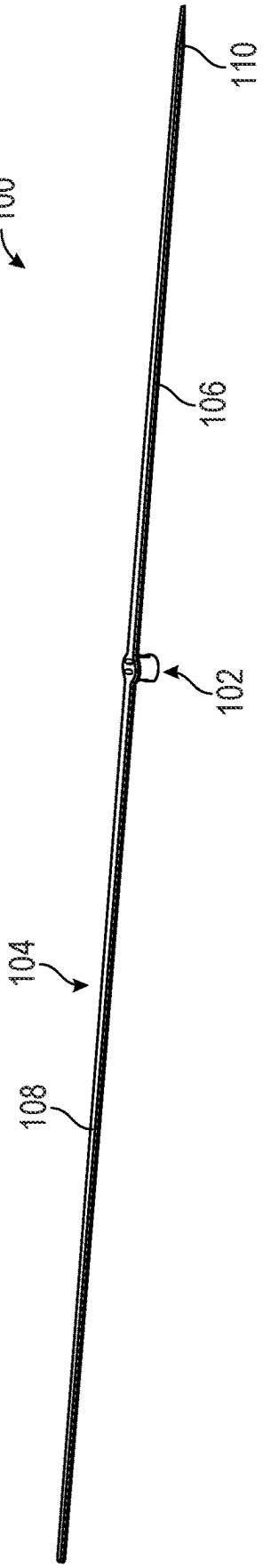

FIG. 2A

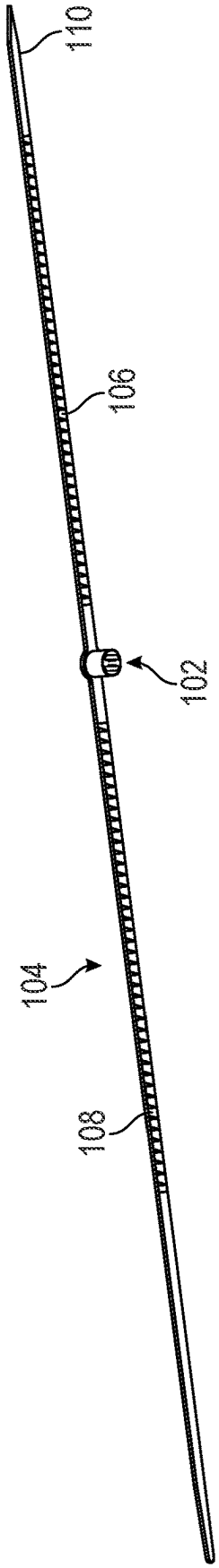

FIG. 2B

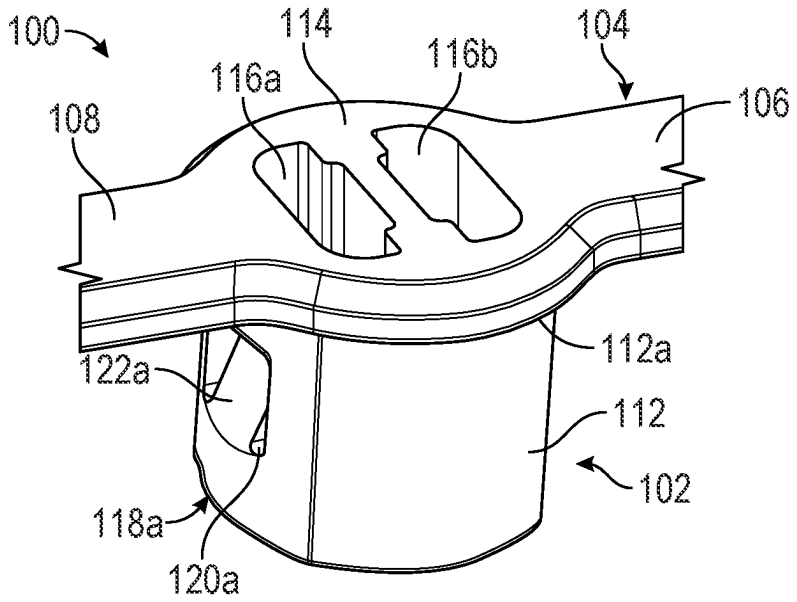
100
114
104
116b
116a
106
108
112a
122a
112
102
118a
120a

FIG. 3A

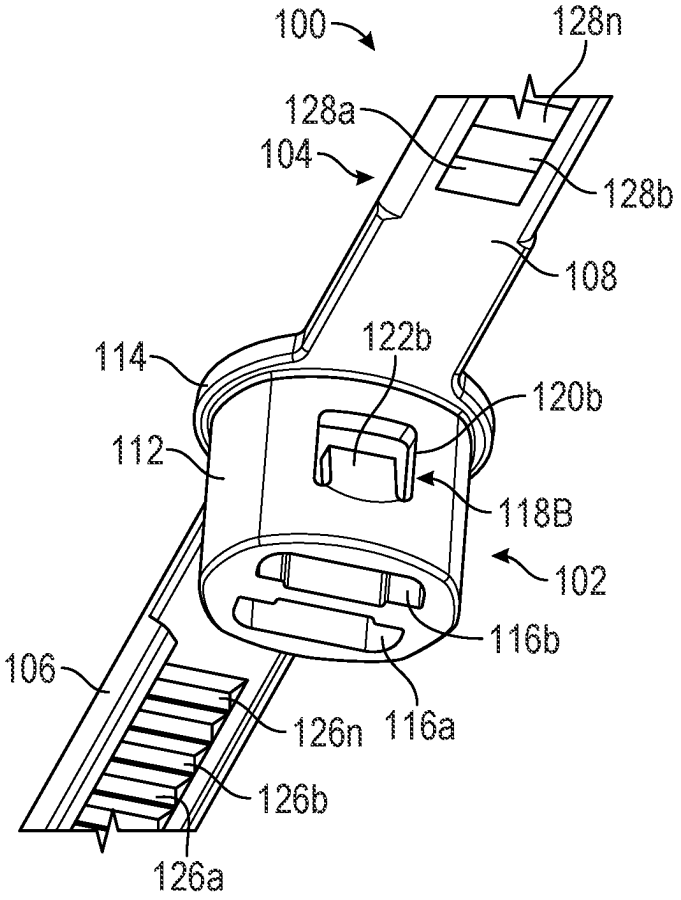
100
128n
128a
104
128b
108
122b
114
120b
112
118B
102
116b
106
126n
116a
126b
126a

FIG. 3B

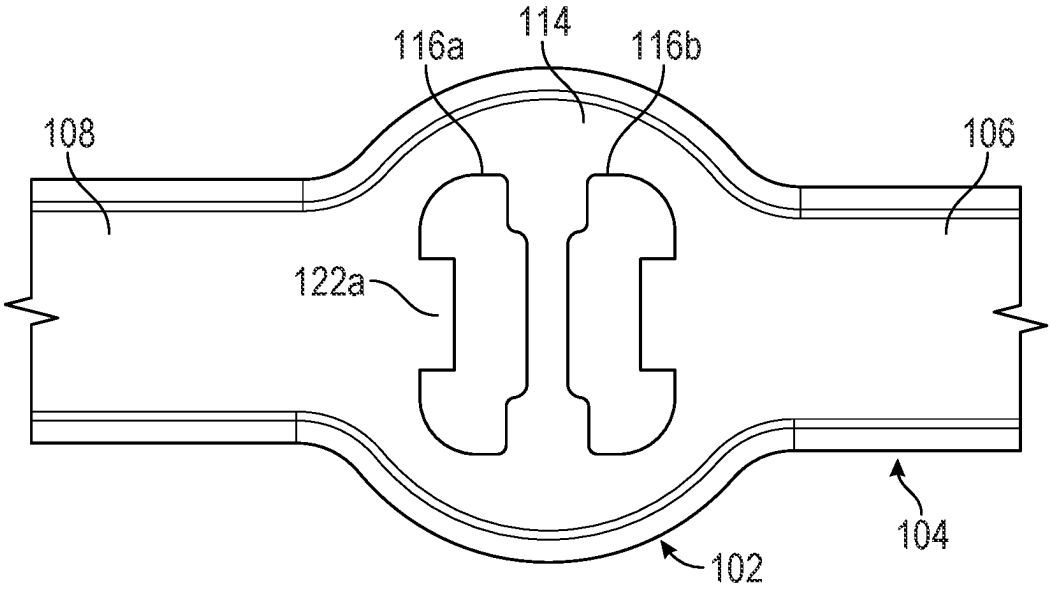

FIG. 3C

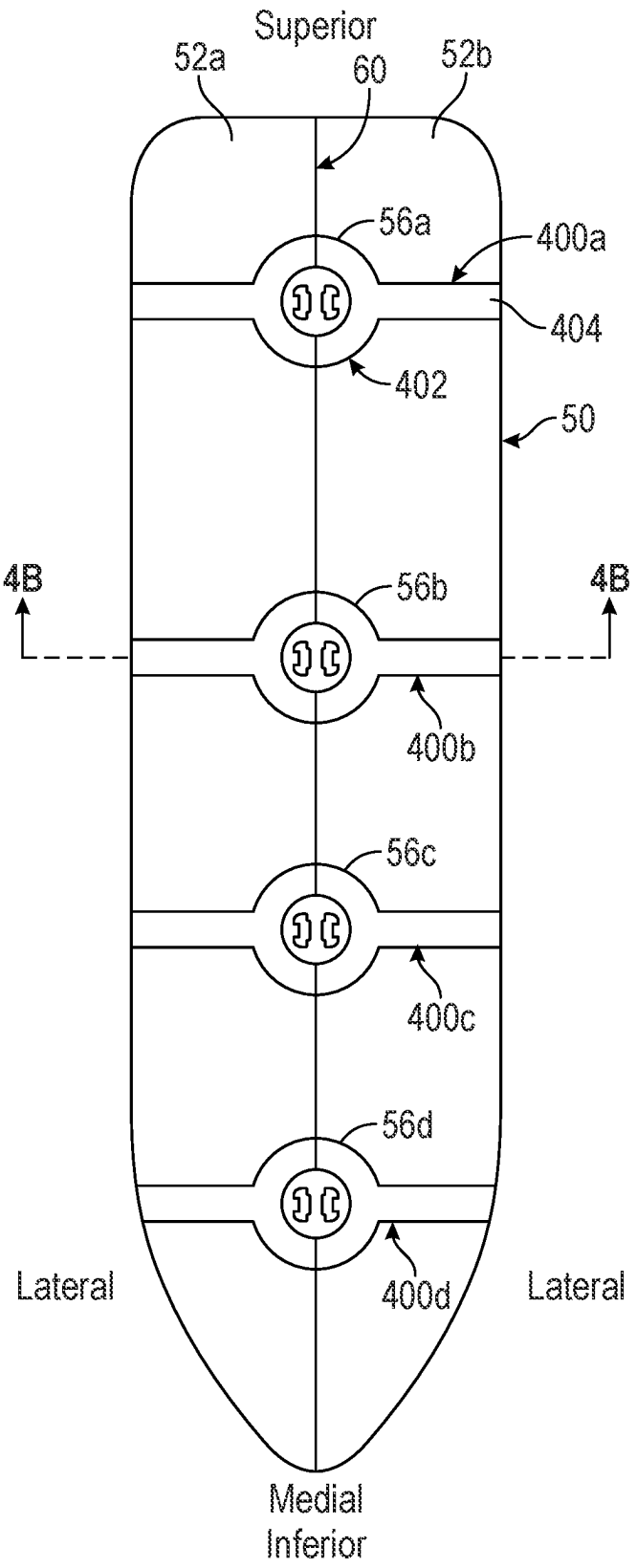
Superior
52a
60
52b
56a
400a
404
402
50
4B
56b
4B
400b
56c
400c
56d
Lateral
400d
Lateral
Medial
Inferior

FIG. 4A

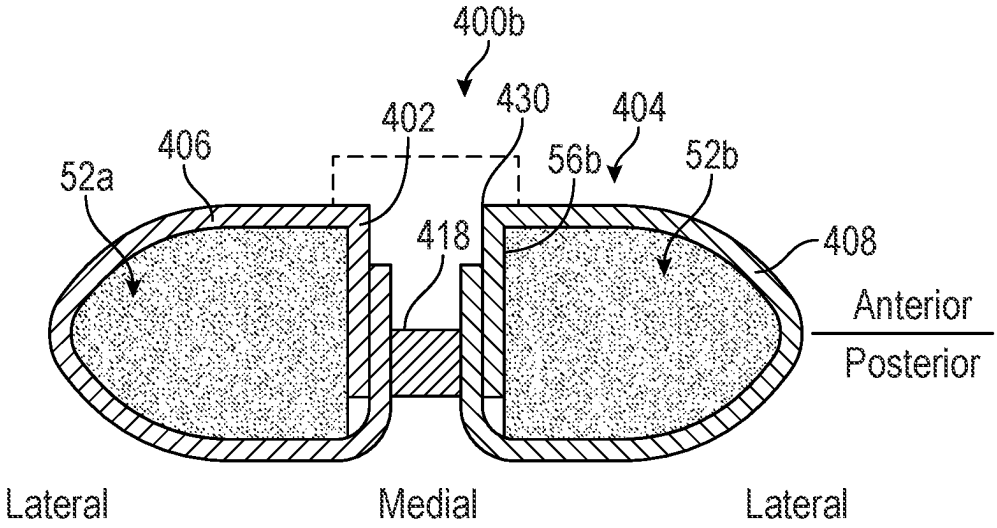
400b
402
430
404
406
56b
52b
52a
418
408
Anterior
Posterior
Lateral
Medial
Lateral

FIG. 4B

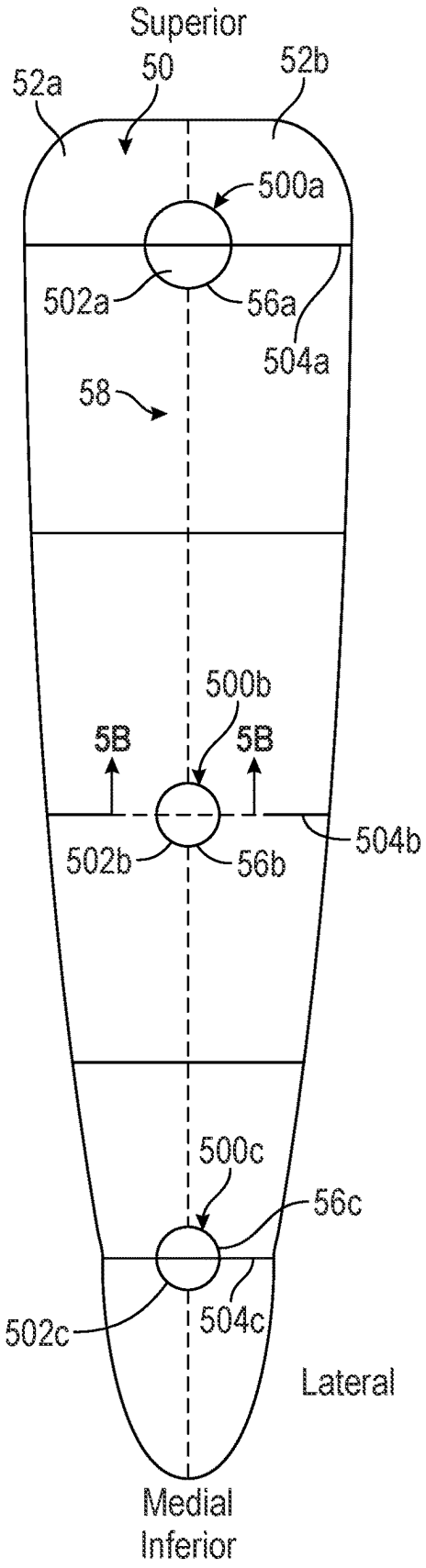
Superior
50
52a
52b
500a
502a
56a
504a
58
500b
5B
5B
502b
56b
504b
500c
56c
502c
504c
Lateral
Medial
Inferior

FIG. 5A

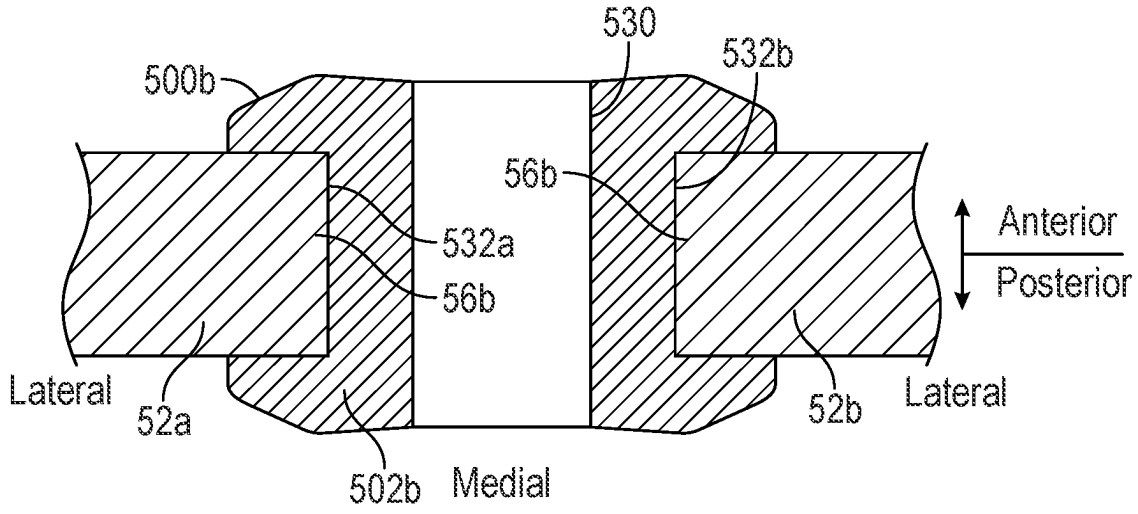
530
532b
500b
56b
532a
56b
Anterior
Posterior
Lateral
52a
502b
Medial
52b
Lateral

FIG. 5B

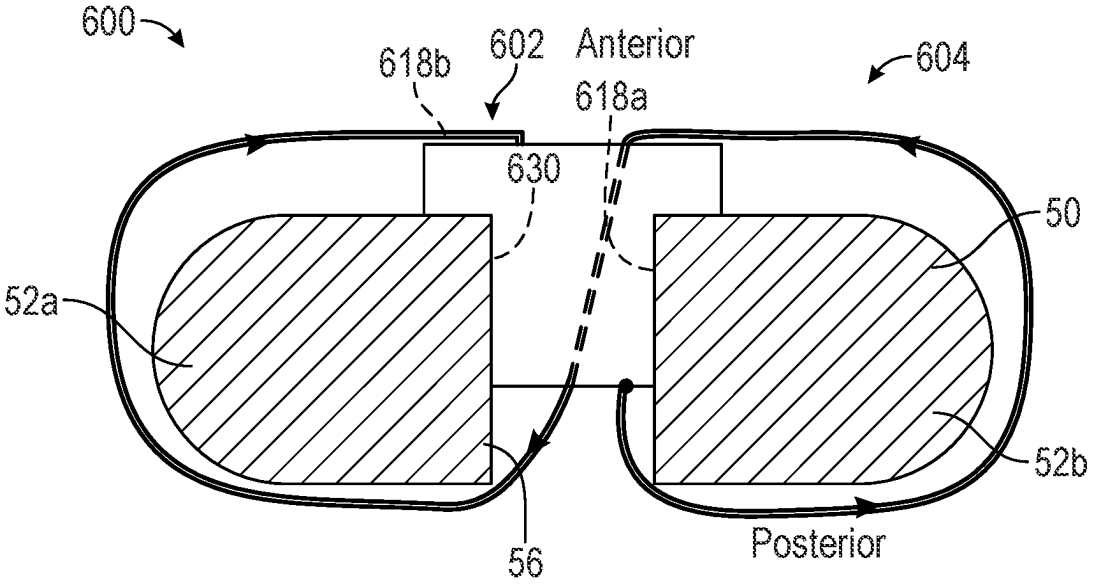
600
618b
602
Anterior
618a
604
630
50
52a
52b
56
Posterior

FIG. 6

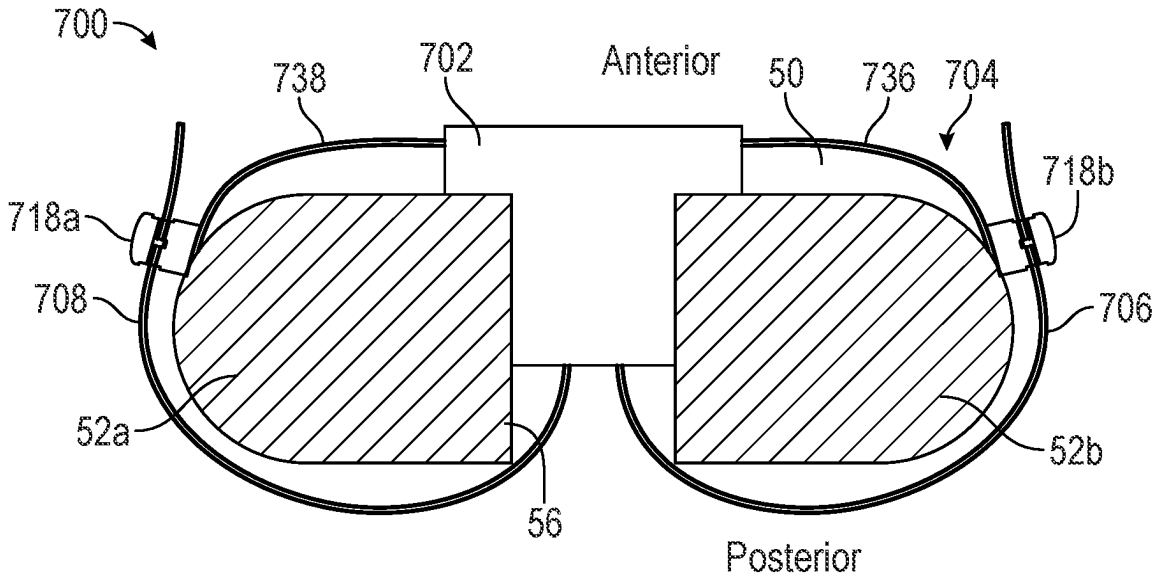
700
738
702
Anterior
50
736
704
718b
718a
708
706
52a
52b
56
Posterior

FIG. 7

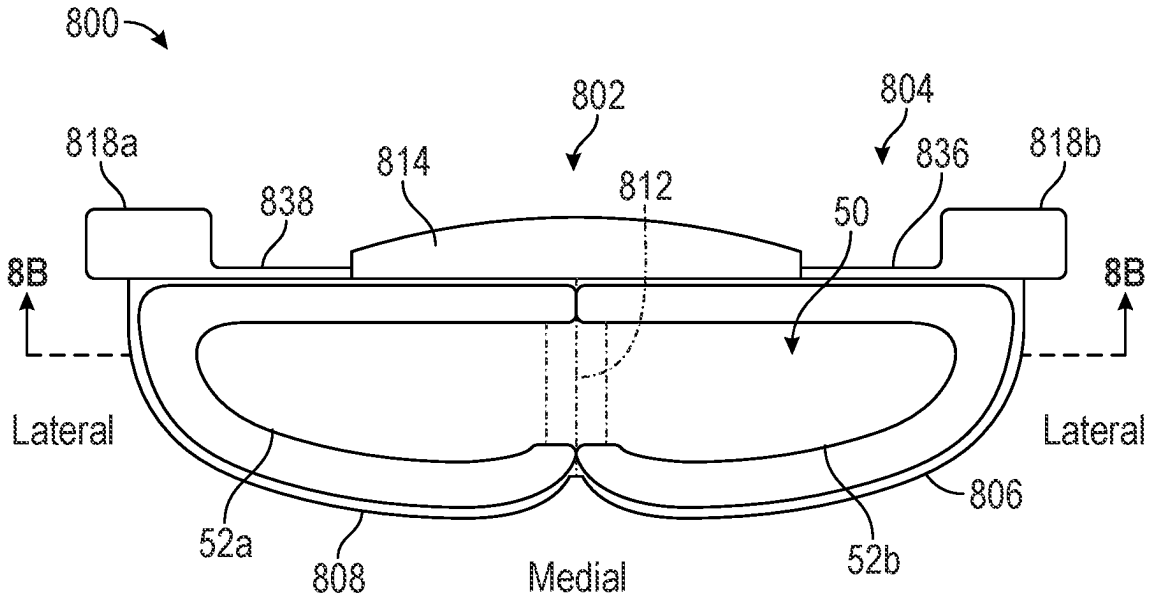
800
802
804
818a
814
836
818b
838
812
50
8B
8B
Lateral
Lateral
806
52a
808
Medial
52b

FIG. 8A

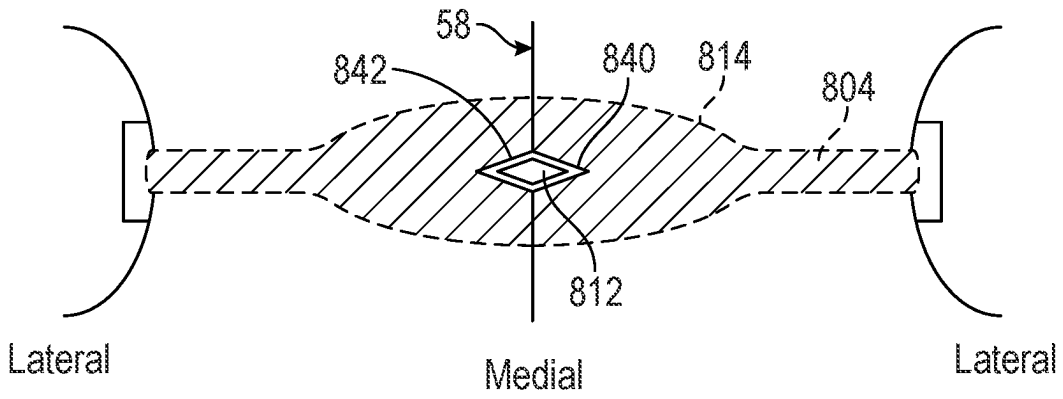
58
842
840
814
804
812
Lateral
Medial
Lateral

FIG. 8B

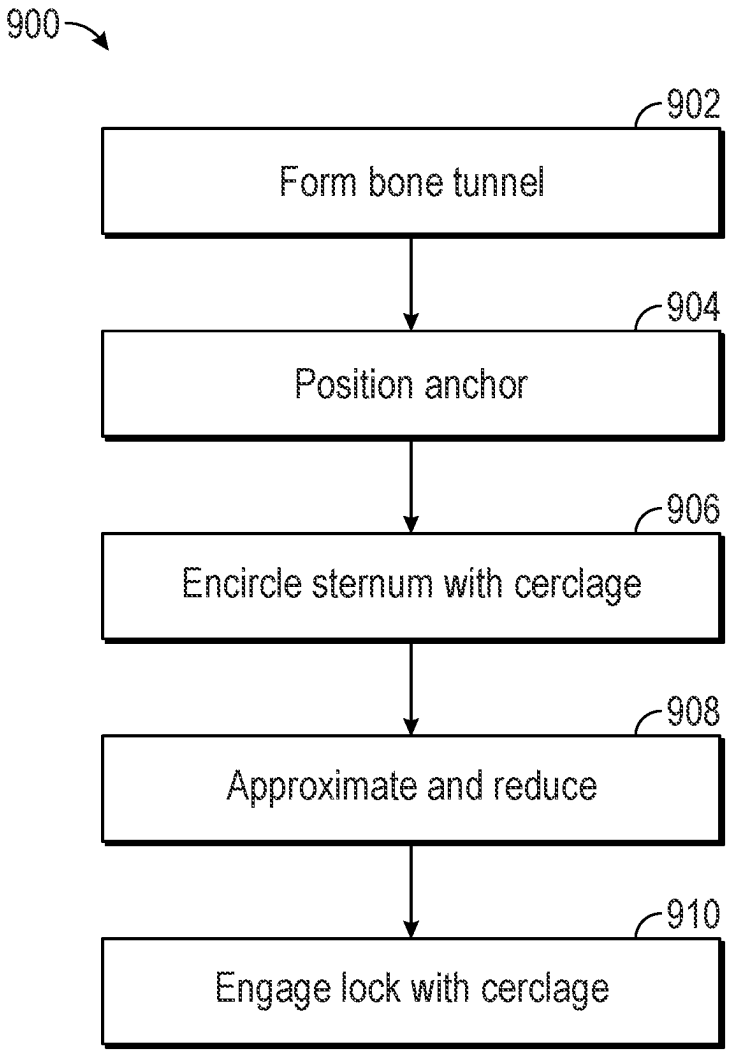
900
902
Form bone tunnel
904
Position anchor
906
Encircle sternum with cerclage
908
Approximate and reduce
910
Engage lock with cerclage

FIG. 9

RIGID STERNAL FIXATION

CLAIM OF PRIORITY

This application claims the benefit of U.S. Provisional Patent Application Ser. No. 63/147,409, filed on Feb. 9, 2021, the benefit of priority of which is claimed hereby, and which is incorporated by reference herein in its entirety.

BACKGROUND

A sternotomy is a procedure performed to separate a sternum of a patient to gain access to the breast or chest cavity of the patient, such as for corrective heart procedures. During a sternotomy procedure a vertical (superior to inferior) cut is made through the sternum allowing the sternum to be cracked or separated to provide access to the chest cavity. Following a procedure within the chest cavity, the sternum must be closed. Commonly, sternotomies are closed or repaired using a wire cerclage wrapped around the sternal halves or a rigid bone plate secured to the sternal halves using bone screws.

BRIEF DESCRIPTION OF THE DRAWINGS

In the drawings, which are not necessarily drawn to scale, like numerals may describe similar components in different views. Like numerals having different letter suffixes may represent different instances of similar components. The drawings illustrate generally, by way of example, but not by way of limitation, various embodiments discussed in the present document.

FIG. **1** illustrates an isometric view of a sternum, ribs, and anchor assemblies.

FIG. **2**A illustrates an isometric view of an anchor assembly.

FIG. **2**B illustrates an isometric view of an anchor assembly.

FIG. **3**A illustrates an enlarged isometric view of an anchor assembly.

FIG. **3**B illustrates an enlarged isometric view of an anchor assembly.

FIG. **3**C illustrates an enlarged top view of an anchor assembly.

FIG. **4**A illustrates a top view of a sternum and anchor assemblies.

FIG. **4**B illustrates a cross-sectional view of a sternum and an anchor assembly.

FIG. **5**A illustrates a top view of a sternum and anchor assemblies.

FIG. **5**B illustrates a cross-sectional view of a sternum and an anchor assembly.

FIG. **6** illustrates a cross-sectional view of a sternum and an anchor assembly.

FIG. **7** illustrates a cross-sectional view of a sternum and an anchor assembly.

FIG. **8**A illustrates a cross-sectional view of a sternum and an anchor assembly.

FIG. **8**B illustrates a cross-sectional view across indicators **8**B-**8**B of FIG. **8**A of a sternum and an anchor assembly.

FIG. **9** illustrates a schematic view of a method.

DETAILED DESCRIPTION

Sternotomies are often performed on a sternum of a patient (such as prior to a cardiac procedure) by creating a midline resection and separating two halves or portions of

the sternum for access to the chest cavity of the patient. Following the procedure, the sternum is often repaired using one or more wire cerclages to hold the two halves in place while the halves heal together. While wire cerclages can help to prevent medial-lateral separation (or relative movement of the halves) of the sternum, wire cerclages are less effective at limiting relative anterior-posterior movement of the halves and are also less effective at limiting relative superior-inferior movement of the halves. Wire cerclages can also unintentionally penetrate outer portions of the sternum. Rigid bone plates are a strategy often used to address the shortcomings of wire cerclages. Rigid bone plates can be secured to each portion or half of the sternum and can help to limit relative movement of the sternal halves in all directions. However, bone plate and screw assemblies can be relatively expensive as compared to wire cerclages and can add a significant number of steps to the repair procedure to properly secure the plate to the sternal halves, as 10 to 20 or more screws are often used to secure the plates.

The inventors have recognized that an anchor assembly can be used to secure the sternal halves to help limit movement of the sternal halves relative to each other while reducing costs with respect to a plate system. The anchor assembly can include an anchor insertable into a bone tunnel between the sternal halves and can include one or more cerclage elements attached to the anchor. The cerclage element(s) can be positioned around the sternal halves and locked to the anchor using a lock, such as an integral ratcheting lock (similar to those used in cable ties). Use of such an anchor assembly to repair a sternotomy can require fewer steps than that of a rigid plate assembly and screw system while use of such an anchor assembly can resist relative movement of the sternal halves better than a wire cerclage.

The above discussion is intended to provide an overview of subject matter of the present patent application. It is not intended to provide an exclusive or exhaustive explanation of the invention. The description below is included to provide further information about the present patent application.

FIG. **1** illustrates an isometric view of a sternum **50**, sternal portions **52***a* and **52***b*, ribs **54***a*-**54***n*, ribs **55***a*-**55***n*, and anchor assemblies **100***a* and **100***b*. The anchor assemblies **100***a* and **100***b* can each include an anchor **102** and a cerclage **104**. The cerclage **104** can include cerclage elements **106** and **108**. The cerclage elements **106** and **108** can be connected to the anchor **102** and can extend outward from the body. FIG. **1** also shows orientation indicators Superior, Inferior, Medial, and Lateral.

During a sternotomy, one or more bone tunnel **58** (**58***a*-**58***c*) can be made at the midline **60** of the sternum **50** either before or after the midline cut is performed. In some examples, a cut guide can be used to create the midline cut or the bone tunnels **58**. After creation of the bone tunnels **58**, the anchor **102** of the anchor assembly **100** can be inserted into the bone tunnel **58**. For example, the anchor **102** of the assembly **100**A can be inserted into the bone tunnel **58***c*. Then, the first cerclage element **108** can be positioned between the ribs, such as the ribs **54***a* and **54***b* and the cerclage element **108** can be wrapped at least partially around the sternal portion **52***b* of the sternum **50** before being secured to a lock of the assembly. Then, the cerclage element **106** can be positioned between the ribs such as the ribs **55***a* and **55***b*. and can be wrapped at least partially around the sternal portion **52***a* of the sternum **50** before being secured to the lock.

The cerclage **104** can also be used to approximate the sternal portions by tightening the cerclage elements **106** and **108** and can be used to reduce the sternal portions **52***a* and **52***b* by further tightening of the cerclage elements **106** and **108** to the lock (or locks). Because bone tunnels **58** can be created prior to creating the midline resection, positioning of the anchor **102** in the bone tunnels **56** can help to ensure that the sternal halves **52***a* and **52***b* are properly positioned together.

Once the sternal portions **52***a* and **52***b* are aligned, the cerclage **104** can be tightened using the lock to fix the position of the cerclage **104** with respect to the sternum **50** and the anchor **102**, helping to limit movement of the sternal portions **52***a* and **52***b* relative to each other in the medial-lateral, superior-inferior, and posterior-anterior directions. The anchor assemblies **100** are discussed in further detail below.

FIG. **2**A illustrates an isometric view of the anchor assembly **100**. FIG. **2**B illustrates an isometric view of the anchor assembly **100**. FIGS. **2**A and **2**B are discussed together below. The anchor assembly **100** can be similar to the assemblies **100** of FIG. **1**; additional details are discussed below with reference to FIGS. **2**A and **2**B.

For example, FIGS. **2**A and **2**B show that the cerclage elements **106** and **108** can be relatively long and can extend outward from the anchor **102**. The cerclage elements **106** and **108** can be different lengths. For example, the cerclage element **108** can be longer than the cerclage element **106** such that the cerclage element **108** to allow the cerclage element **108** to be used for approximation and reduction of the sternal portions (such as the portions **52***a* and **52***b* of FIG. **1**).

The anchor assembly **100** (including the anchor **102** and the cerclage **104**) can be made of materials such as metals, plastics, foams, elastomers, ceramics, composites, or combinations thereof. In some examples, anchor assembly **100** can be comprised of biocompatible materials such as such as stainless steels, cobalt-chromium, titanium variations, polyether ether ketone (PEEK), polyether ketone ketone (PEKK), or combinations thereof.

FIGS. **2**A and **2**B also show that the cerclage **104** can include one or more needles **110**. The needle **110** can be connected and end or near an outer end of the cerclage element **106**. The needle **110** can be used to more easily pass the cerclage element **106** through costal tissues between ribs. Following passing the cerclage element **106** through costal tissue, the needle **110** can be removed (cut off). The cerclage element **108** can also include a needle.

FIG. **3**A illustrates an enlarged isometric view of the anchor assembly **100**. FIG. **3**B illustrates an enlarged isometric view of the anchor assembly **100**. FIG. **3**C illustrates an enlarged top view of the anchor assembly **100**. The anchor assembly of FIGS. **3**A-**3**C can be similar to the anchor assembly **100** discussed in FIGS. **1**-**2**; additional details are discussed below with reference to FIGS. **3**A-**3**C.

For example, FIGS. **3**A and **3**B show that the anchor **102** can include a body **112** and a collar **114**. The body **112** can be substantially cylindrical and configured to be inserted into a bone tunnel (e.g., the bone tunnels **56** of FIG. **1**). The body **112** can be other shapes in other examples such as a cuboid, a hexagonal prism, octagonal prism, or the like. The collar **114** can extend outward (such as radially outward) from an end portion **112***a* of the body **112** such that the collar **114** has a diameter or radially outer dimension that is larger than that of the body **112**. The collar **114** can be configured to engage a top surface of a sternum (such as the sternum **50**) when the body **112** is inserted into the bone tunnel (such as the bone tunnel **56**) to help limit movement of the anchor **102** into the bone tunnel (posteriorly). Optionally, a second collar can be connected to an end of the body **112** opposite the collar **114** that can extend radially outward therefrom. The second collar and the collar **114** can together capture a sternum therebetween.

The body **112** and the collar **114** (i.e., the anchor **102**) can be a rigid or semi-rigid body configured to engage the sternal halves without plastically deforming under loading of normal daily activities. Conversely, the cerclage **104** can be relatively flexible to allow the cerclage to change shapes to conform to the sternal half (or halves) around which the cerclage is positioned.

FIGS. **3**A-**3**C also show that the anchor **102** can include channels **116***a* and **116***b* extending through the body **112** and the collar **114**. The channels **116***a* and **116***b* can be sized to receive the cerclage elements **106** and **108**, respectively, therein or therethrough to help allow the cerclage elements **106** and **108** to lock to the anchor **102** to secure the sternal halves or portions. In some examples, the channels **116***a* and **116***b* can be the same size and shape in a mirrored configuration. In some examples, the channels **116** can be different sizes, shapes, or orientations.

FIGS. **3**A-**3**C also show that the anchor **102** can include locks **118***a* and **118***b*, which can be optionally integrally formed into the body **112** of the anchor **102**. The locks **118***a* and **118***b* can include slots **120***a* and **120***b*, respectively, and ratchets **122***a* and **122***b*, respectively. The ratchets **122***a* and **122***b* can extend into the slots **120***a* and **120***b*, respectively, through other walls of the body **112** such that the ratchets **122***a* and **122***b* can extend into the channels **116***a* and **116***b*, respectively. By extending into the channels **116***a* and **116***b*, respectively, the ratchets **122***a* and **122***b* can engage the cerclage elements **108** and **106**, respectively, when the cerclage elements **108** and **106** are passed through the channels **116***a* and **116***b*, respectively, allowing the cerclage elements **106** and **108** to lock to the body **112**.

FIG. **3**B also shows teeth **126***a*-**126***n* of cerclage element **106** and teeth **128***a*-**128***n* of cerclage element **108**. The teeth **126** and **128** can be raised portions on an underside of the cerclage elements **106** and **108**, respectively. The teeth **126** and **128** can be configured to engage the ratchets **122***a* and **122***b*, respectively to lock the cerclage elements **106** and **108** in their respective positions. Together, the teeth **126** and **128** and the ratchets **122***a* and **122***b* can form uni-directional locks, ratcheting mechanisms, or ratcheting locks, which can help to prevent the cerclage elements **106** and **108** from backing out of the locks **118**.

When the anchor **102** is implanted, the collar **114** can engage the outer surface (e.g., anterior surface) of the sternum to limit movement of the anchor **102** into the bone tunnel (e.g., bone tunnel **56***a*). Also, the body **112** can engage the bone tunnel and therefore the sternal halves **52***a* and **52***b* to help limit movement relative to each other in the interior and superior directions. When the anchor **102** is secured within the bone tunnel and when the cerclage **104** is secured to the lock **118** (or locks **118***a* and **118***b*), the cerclage **104** can help to limit separation of the sternal halves **52***a* and **52***b*, or can help to limit relative medial and lateral movement of the sternal halves **52***a* and **52***b*. Also, when the anchor **102** is secured within the bone tunnel and when the cerclage **104** is secured to the lock **118** (or locks **118***a* and **118***b*), the cerclage **104** can help to limit relative movement of the sternal halves in the anterior and posterior directions. In this way, the anchor assembly can help to limit separation or movement of the sternal halves while helping to reduce costs over other solutions.

FIG. **4**A illustrates a top view of a sternum **50** and anchor assemblies **400***a*-**400***d*. FIG. **4**B illustrates a cross-sectional view across indicators **4**B-**4**B of FIG. **4**A of the sternum and the anchor assembly **400***b*. FIG. **4**A also shows orientation indicators Superior, Inferior, Medial, and Lateral. FIG. **4**B also shows orientation indicators Anterior, Posterior, Medial, and Lateral. FIGS. **4**A and **4**B are discussed together below.

The anchor assemblies **400** can be similar to the anchor assemblies **100** discussed above. The anchor assembly **400** can include an anchor **402** and a cerclage **404** including cerclage elements **406** and **408**. The anchor **402** can be positionable in the bone tunnel **56***b* and the cerclage element **406** can extend around, or at least partially around, the sternal portion **52***a* and the cerclage element **408** can extend around, or at least partially around, the sternal portion **52***b*. The cerclage elements **406** and **408** can engage a lock **418** to secure the cerclage elements **406** and **408** to the sternal halves **52***a* and **52***b*, respectively. The lock **418** can be a ratcheting lock, such as a cable-tie type lock, or can be other lock types (e.g., fasteners, clamps, adhesives, or the like).

FIG. **4**B shows that the anchor assembly **400** can include an opening **430** at an anterior portion of the anchor **402**, which can provide access to the cerclage elements **406** and **408** near the lock **418**. The opening **430** can thereby allow for the cerclage elements **406** and **408** to be trimmed near the lock **418**, posteriorly of the anterior surface of the anchor **402**, which can help to reduce palpability of the anchor assembly **400** and can help to limit tissue interaction between the cut ends of the cerclage **404** and tissues (e.g., skin).

FIG. **5**A illustrates a top view of a sternum **50** and anchor assemblies **500***a*-**500***c*. FIG. **5**B illustrates a cross-sectional view across indicators **5**B-**5**B of FIG. **5**A of the sternum and the anchor assembly **500***b*. FIG. **5**A also shows orientation indicators Superior, Inferior, Medial, and Lateral. FIG. **5**B also shows orientation indicators Anterior, Posterior, Medial, and Lateral. FIGS. **5**A and **5**B are discussed together below.

The anchor assemblies **500** can be similar to the anchor assemblies **100** and **400** discussed above in that they include an anchor **502**. The anchor **500** can include a body **502** or button that can be positionable in the bone tunnel **56***b*. The body **502** can also include slots **532***a* and **532***b* which can extend radially inward from a radially (laterally) outer surface of the body **502**. The slots **532***a* and **532***b* can be one slot extending around a circumference of the body **502** or can be individual or discreet slots. The slots **532** can be notches, undercuts, channels, or the like.

The slots **532***a* and **532***b* can be configured to receive the sternal halves **52***a* and **52***b* at the bone tunnel **56***b*, as shown in FIG. **5**B. When the sternal halves **52***a* and **52***b* are positioned in the slots, engagement between flanges defining the slots **532** and between the sternal halves **52** can help to limit relative anterior and posterior movement of the sternal halves **52***a* and **52***b*. For example, engagement between the sternal halves **52***a* and **52***b* and the slots **532***a* and **532***b*, respectively, can help to limit anterior and posterior movement of the sternal halves **52***a* and **52***b* with respect to each other.

In examples where the slots **532** extend to superior and inferior portions of the body **502**, the slots **532** can also help to limit relative inferior and superior movement of the sternal portions **502***a* and **502***b*. Any of the anchor assemblies discussed above or below can be modified to include the slots of the anchor assembly **500**.

The assembly **500** can also include a cerclage **504** which can be a cable-tie type cerclage, as discussed in the assemblies above, or can be other types of cerclages. For example, wire can be used with the anchor **500**, as the wire can be fed through the opening **530** in the body **502**. Similarly, a cable tie-type cerclage can be fed through the opening **530**. Optionally, the opening **530** can be capped or filled. Use of any type of cerclages can help to limit movement of the sternal halves **52** relative to each other in medial and lateral directions.

Optionally, a single cerclage element can be used to pass around the sternal halves **52***a* and **52***b* without passing through the opening **530**. In such an example, the body can help to limit movement of the sternal halves **52** in the anterior and posterior directions.

In use, the assemblies **500** can be secured to one sternal half (e.g., **52***b*) using the slot **532***b* and then the other sternal half **52***a* can be moved into the slots **532***a* to approximate the sternal anteriorly-posteriorly and superiorly-inferiorly. The cerclage **504** can then be placed to approximate medially-laterally and to secure the assemblies **500** in place with respect to the sternum **50**. Optionally, ends of the cerclage can be positioned in the opening **530**, which can be optionally capped. The diameter or size of the channels **532** can be optionally sized for creation of the bone tunnels **56** prior to resection of the midline **58**. That is, bone material may be removed during the midline **58** resection, changing the shape of the bone tunnels **56**. The channels **532** can be sized to accommodate the change in shape or in size of the bone tunnels **56**.

FIG. **6** illustrates a cross-sectional view of a sternum **50** and an anchor assembly **600**. FIG. **6** also shows orientation indicators Anterior and Posterior. The anchor assembly **600** can be similar to those discussed above, such as the anchor assembly **100**; the assembly **600** can differ in that the cerclage **604** can include a single cerclage element.

The cerclage **604** can be connected to the anchor **602**, such as at a posterior portion of the anchor **602**. In use, the cerclage **604** can be wrapped around the sternal portion **52***b* and then passed through an opening **630** of the anchor **602**. Optionally, the anchor **602** can include a first lock **618***a* in the opening **630** that can allow the cerclage **604** to be secured around the sternal portion **52***b* and then locked to the anchor **602**. Once the cerclage **604** is secured to the first lock **618***a* (or optionally after passing through the opening **630**), the cerclage **604** can be passed around the sternal portion **52***a* and can be secured to the anchor **602** by a second lock **618***b*. The second lock **618***b* can be in other locations in other examples.

In some examples, the anchor **602** and the cerclage **604** can be integrally formed or can be a single piece. The use of a single-piece assembly or a single cerclage element can help to simplify approximation and reduction of the two sternal halves.

FIG. **7** illustrates a cross-sectional view of a sternum **50** and an anchor assembly **700**. FIG. **7** also shows orientation indicators Anterior and Posterior. The anchor assembly **700** can be similar to those discussed above, such as the anchor assembly **100**, the assembly **700** can differ in that a cerclage **704** can include four elements, **706**, **708**, **736**, and **738**.

The cerclage elements **706** and **708** can extend from posterior portions of the anchor **702** such that the cerclage element **708** can be positioned at least partially around the sternal half **52***a* and the cerclage element **706** can extend at least partially around the cerclage half **52***b*. The cerclage element **738** can extend from an anterior portion of the anchor **702** around the sternal half **52***a* where the cerclage

element **738** can connect to a lock **718***a* configured to receive the cerclage element **708** to secure the cerclage elements **708** and **738** around the sternal half **52***a*. Similarly, the cerclage element **736** can extend from an anterior portion of the anchor **702** around the sternal half **52***b* where the cerclage element **736** can connect to a lock **718***b* configured to receive the cerclage element **706** to secure the cerclage elements **706** and **736** around the sternal half **52***b*.

By locating the locks **718** outside of the anchor **702**, the anchor **702** can have a relatively smaller diameter or size, which can allow the bone tunnel **56** to be relatively smaller, which can help to improve patient healing. The locks **718** can be located anywhere along any of the cerclage elements **706**, **708**, **736**, and **738**

FIG. **8**A illustrates a cross-sectional view of a sternum **50** and an anchor assembly **800**. FIG. **8**B illustrates a cross-sectional view across indicators **8**B-**8**B of FIG. **8**A of the sternum **50** and the anchor assembly **800**. FIGS. **8**A and **8**B also show orientation indicators medial and lateral. FIGS. **8**A and **8**B are discussed together below.

The anchor assembly **800** can include an anchor **802** and a cerclage **804**. The anchor **802** can include a body **812** and a collar **814**. The cerclage **804** can include cerclage elements, **806**, **808**, **836**, and **38**. The anchor assembly **800** can also include locks **818***a* and **818***b*. The anchor assembly **800** can be similar to the anchor assemblies discussed above; anchor assembly **800** can differ in that it can have a body with a diamond shape. Any of the anchor assembles discussed above can be modified to include a body with a similar shape.

The body **812** can be shaped similar to that of a diamond from a posterior direction, as shown in FIG. **8**B. That is, the body **812** can include projections **840** and **842** extending outward (e.g., laterally) from the body **812**, which can terminate in a point such that the projections **840** and **842** are relatively sharp. In operation, the sharp projections can engage the sternal halves **52***a* and **52***b* when the halves **52** are reduced to engage each other and to engage the projections **840** and **842**. Because the sternal halves have already been cut at the midline **58**, relatively soft bone of the sternal halves will engage the projections **840** and **842** during reduction such that the projections **840** and **842** can penetrate or deform the bone of the sternal halves **52***a* and **52***b* to create a bone tunnel for the body **812** in the sternal halves **52***a* and **52***b* without a drilling operation. Such a body can be thereby installed without a drilling operation, which can save time during a procedure to close a sternotomy. Optionally, the projections **840** and **842** can include multiple points or can include serrations.

FIG. **9** illustrates a schematic view of the method **900**, in accordance with at least one example of this disclosure. The method **900** can be a method of repairing a sternotomy using an anchor assembly. More specific examples of the method **900** are discussed below. The steps or operations of the method **900** are illustrated in a particular order for convenience and clarity; many of the discussed operations can be performed in a different sequence or in parallel without materially impacting other operations. The method **900** as discussed includes operations performed by multiple different actors, devices, and/or systems. It is understood that subsets of the operations discussed in the method **900** can be attributable to a single actor, device, or system could be considered a separate standalone process or method.

The method **900** can begin with performing a sternotomy, such as making an incision and making a superior-to-inferior cut through a sternum. The method can begin or continue at step **902** where a bone tunnel can be created along the midline of a sternum, where the bone tunnel can be formed in a first portion of the sternum and a second portion of the sternum. For example, the bone tunnel **56** can be created along the midline **58** of the sternum **50**. At step **904**, an anchor of an anchor assembly can be positioned along the midline between the first portion of the sternum and the second portion of the sternum. For example, the anchor **102** can be positioned along the midline **58** between the first and second portions **52***a* and **52***b*.

At step **906**, at least a portion of the first portion of the sternum can be encircled with a cerclage of the anchor assembly, where the cerclage can be connected to the anchor and at least a portion of the second portion of the sternum can be encircled with the cerclage of the anchor. For example, the portion **52***a* can be at least partially encircled by the cerclage **104** (e.g., **106**, **108**), which can be connected to the body, and the portion **52***b* can be encircled by the cerclage **104**. At step **908**, the first sternum portion and the second sternum portion can be approximated using the cerclage. For example, the sternal portions **52***a* and **52***b* can be approximated using the cerclage **104**, such as after the cerclage **104** is at least partially surrounding the sternal portion **52***a*. Also, at step **908**, the first sternum portion and the second sternum portion can be reduced by tightening the cerclage in the lock. For example, the sternal portions **52***a* and **52***b* can be reduced by tightening the cerclage **104** in the lock **118**.

At step **910**, a lock of the anchor assembly can be engaged with the cerclage to secure the cerclage to the lock and to the anchor of the anchor and to secure the first portion of the sternum to the second portion of the sternum. For example, the lock **118** can be engage with the cerclage **104** to secure the cerclage **104** to the lock **118**.

In another example the cerclage **104** can be passed through the anchor **102** after encircling the portion of the first portion of the sternum **52***a* and before encircling the portion of the second portion of the sternum **52***b*. In another example, a cut guide can be used to perform the sternotomy along the midline **58** and through a center of the bone tunnel **56**, wherein the bone tunnel **56** can be formed using the cut guide. In another example, the cut guide can be used to perform the sternotomy along the midline **58** and through a center of the bone tunnel, where the bone tunnel **56** can be formed using the cut guide.

In another example, the needle **110** of the cerclage **104** can be passed through intercostal space and the needle **110** can be removed from the cerclage **104** after passing at least a portion of the cerclage **104** through the intercostal space.

In another example, at least the portion of the first portion **52***b* of the sternum can be encircled with a first element **108** of the cerclage **104** and at least a portion of the second portion **52***a* can be at least partially encircled by a second element **106** of the cerclage **104**, where the first element **108** and the second element **106** can be connected to the anchor **102**.

In another example, the lock **118** can include a first lock **118***a* can engage with the first element **108** of the cerclage **104** and can include a second lock **118***b* of engageable with the second element **106** of the cerclage. Optionally, the first lock **118***a* and the second lock **118***b* can be integrally formed with the anchor **102**.

NOTES AND EXAMPLES

The following, non-limiting examples, detail certain aspects of the present subject matter to solve the challenges and provide the benefits discussed herein, among others.

Example 1 is an anchor assembly for securing a first portion and a second portion of a separated sternum, the anchor assembly comprising: a lock; an anchor comprising: a body locatable between the first portion and the second portion of the sternum, the body defining an end portion; and a collar connected to the body and extending outward from the end portion of the body, the collar engageable with an outer surface of the sternum to limit movement of the body beyond the outer surface of the sternum; and a cerclage connected to and extending from the anchor, the cerclage configured to surround at least at least partially surround the first portion and the second portion of the separated sternum, and the cerclage connectable to the lock to secure the cerclage and the anchor to the sternum and to secure the first portion of the separated sternum to the second portion of the separated sternum.

In Example 2, the subject matter of Example 1 optionally includes wherein the cerclage includes a first element and a second element, the first element configured to at least partially surround the first portion of the sternum and the second element configured to at least partially surround the second portion of the sternum.

In Example 3, the subject matter of Example 2 optionally includes wherein the lock includes: a first lock configured to engage the first cerclage to limit movement of the first cerclage element relative to the anchor; and a second lock configured to engage the second cerclage to limit movement of the second cerclage element relative to the anchor.

In Example 4, the subject matter of Example 3 optionally includes wherein the first lock and the second lock include uni-directional ratchet mechanisms.

In Example 5, the subject matter of Example 4 optionally includes wherein the first lock and the second lock are integral to the body of the anchor.

In Example 6, the subject matter of any one or more of Examples 4-5 optionally include wherein the first lock and the second lock are integral to the first element and the second element.

In Example 7, the subject matter of any one or more of Examples 2-6 optionally include wherein the cerclage includes a third element extending from the body, the third element including a first lock of the lock, the first lock configured to secure the first element to the body, and wherein the cerclage includes a fourth element extending from the body, the fourth element including a second lock of the lock, the second lock configured to secure the second element to the body.

In Example 8, the subject matter of any one or more of Examples 1-7 optionally include wherein the body is insertable into a bone tunnel formed in the first portion and the second portion of the sternum, the collar engageable with the outer surface of the sternum to limit movement of the body into the bone tunnel, and the body engageable with the bone tunnel to limit relative movement between the first portion of the sternum and the second portion of the sternum.

In Example 9, the subject matter of any one or more of Examples 1-8 optionally include wherein the body forms a projection engageable with the sternum to form a bone tunnel in the first portion of the sternum.

In Example 10, the subject matter of any one or more of Examples 1-9 optionally include wherein the cerclage is configured to at least partially surround the first portion of the sternum, pass through the body of the anchor, and at least partially surround the second portion of the sternum.

In Example 11, the subject matter of any one or more of Examples 1-10 optionally include wherein the cerclage, the anchor, and the lock are integrally formed.

Example 12 is a method for repairing a midline sternotomy, the method comprising: creating a bone tunnel along the midline of a sternum, the bone tunnel formed in a first portion of the sternum and a second portion of the sternum; positioning an anchor of an anchor assembly along the midline between the first portion of the sternum and the second portion of the sternum; encircling at least a portion of the first portion of the sternum with a cerclage of the anchor assembly, the cerclage connected to the anchor; encircling at least a portion of the second portion of the sternum with the cerclage of the anchor; and engaging a lock of the anchor assembly with the cerclage to secure the cerclage to the lock and to the anchor of the anchor and to secure the first portion of the sternum to the second portion of the sternum.

In Example 13, the subject matter of Example 12 optionally includes approximating the first sternum portion and the second sternum portion using the cerclage.

In Example 14, the subject matter of any one or more of Examples 12-13 optionally include reducing the first sternum portion and the second sternum portion by tightening the cerclage in the lock.

In Example 15, the subject matter of any one or more of Examples 12-14 optionally include passing the cerclage through the anchor after encircling the portion of the first portion of the sternum and before encircling the portion of the second portion of the sternum.

In Example 16, the subject matter of any one or more of Examples 12-15 optionally include using a cut guide to perform the sternotomy along the midline and through a center of the bone tunnel.

In Example 17, the subject matter of Example 16 optionally includes wherein the bone tunnel is formed using the cut guide.

In Example 18, the subject matter of any one or more of Examples 12-17 optionally include passing a needle of the cerclage through intercostal space; and removing the needle from the cerclage after passing at least a portion of the cerclage through the intercostal space.

In Example 19, the subject matter of any one or more of Examples 12-18 optionally include wherein encircling at least the portion of the first portion of the sternum includes encircling the portion with a first element of the cerclage and wherein encircling at least the portion of the second portion of the sternum includes encircling the portion with a second element of the cerclage, the first element and the second element connected to the anchor.

In Example 20, the subject matter of Example 19 optionally includes wherein engaging the lock includes engaging a first lock of the lock with the first element of the cerclage and includes engaging a second lock of the lock with the second element of the cerclage.

In Example 21, the subject matter of Example 20 optionally includes wherein the first lock and the second lock are integrally formed with the anchor.

Example 22 is an anchor assembly for securing a first portion and a second portion of a separated sternum, the anchor assembly comprising: an anchor comprising: a body locatable between the first portion and the second portion of the sternum, the body defining an end portion; and a collar connected to the body and extending outward from the end portion of the body, the collar engageable with an outer surface of the sternum to limit movement of the body beyond the outer surface of the sternum; and a cerclage connected to and extending from the anchor, the cerclage configured to surround at least at least partially surround the first portion and the second portion of the separated sternum,

and the cerclage connectable to itself or the anchor to secure the cerclage and the anchor to the sternum and to secure the first portion of the separated sternum to the second portion of the separated sternum.

In Example 23, the apparatuses or method of any one or any combination of Examples 1-22 can optionally be configured such that all elements or options recited are available to use or select from.

The above detailed description includes references to the accompanying drawings, which form a part of the detailed description. The drawings show, by way of illustration, specific embodiments in which the invention can be practiced. These embodiments are also referred to herein as "examples." Such examples can include elements in addition to those shown or described. However, the present inventors also contemplate examples in which only those elements shown or described are provided. Moreover, the present inventors also contemplate examples using any combination or permutation of those elements shown or described (or one or more aspects thereof), either with respect to a particular example (or one or more aspects thereof), or with respect to other examples (or one or more aspects thereof) shown or described herein.

In the event of inconsistent usages between this document and any documents so incorporated by reference, the usage in this document controls. In this document, the terms "including" and "in which" are used as the plain-English equivalents of the respective terms "comprising" and "wherein." Also, in the following claims, the terms "including" and "comprising" are open-ended, that is, a system, device, article, composition, formulation, or process that includes elements in addition to those listed after such a term in a claim are still deemed to fall within the scope of that claim.

The above description is intended to be illustrative, and not restrictive. For example, the above-described examples (or one or more aspects thereof) may be used in combination with each other. Other embodiments can be used, such as by one of ordinary skill in the art upon reviewing the above description. The Abstract is provided to comply with 37 C.F.R. § 1.72(b), to allow the reader to quickly ascertain the nature of the technical disclosure. It is submitted with the understanding that it will not be used to interpret or limit the scope or meaning of the claims. Also, in the above Detailed Description, various features may be grouped together to streamline the disclosure. This should not be interpreted as intending that an unclaimed disclosed feature is essential to any claim. Rather, inventive subject matter may lie in less than all features of a particular disclosed embodiment. Thus, the following claims are hereby incorporated into the Detailed Description as examples or embodiments, with each claim standing on its own as a separate embodiment, and it is contemplated that such embodiments can be combined with each other in various combinations or permutations. The scope of the invention should be determined with reference to the appended claims, along with the full scope of equivalents to which such claims are entitled.

The invention claimed is:

1. An anchor assembly for securing a first portion and a second portion of a separated sternum, the anchor assembly comprising:

an anchor comprising:

a body insertable into a bone tunnel of one or more of the first portion and the second portion of the sternum, the body defining an end portion, and the body defining a first channel and a second channel extending through the body; and

a collar connected to the body and extending laterally outward from the end portion of the body, the collar engageable with an outer surface of the sternum;

a first lock integral to the body and extending from an outer surface of the body into the first channel and a second lock integral to the body and extending from the outer surface of the body into the second channel; and

a cerclage integrally formed into and extending from the anchor, the cerclage including a first element configured to at least partially surround the first portion of the separated sternum and insertable through the first channel, the cerclage including a second element configured to at least partially surround the second portion of the separated sternum and insertable through the second channel, and the first element connectable to the first lock and the second element connectable to the second lock to secure the cerclage and the anchor to the sternum and to secure the first portion of the separated sternum to the second portion of the separated sternum.

2. The anchor assembly of claim **1**, wherein the first lock is configured to engage the first cerclage element to limit movement of the first cerclage element relative to the anchor, and wherein the second lock is configured to engage the second cerclage element to limit movement of the second cerclage element relative to the anchor.

3. The anchor assembly of claim **2**, wherein the first lock and the second lock include uni-directional ratchet mechanisms.

4. The anchor assembly of claim **1**, wherein the collar is engageable with the outer surface of the sternum to limit movement of the body into the bone tunnel, and the body is engageable with the bone tunnel to limit relative movement between the first portion of the sternum and the second portion of the sternum.

5. The anchor assembly of claim **1**, wherein the body forms a projection engageable with the sternum to form a bone tunnel in the first portion of the sternum.

6. The anchor assembly of claim **1**, wherein the cerclage is configured to at least partially surround the first portion of the sternum, pass through the body of the anchor, and at least partially surround the second portion of the sternum.

7. An anchor assembly for securing a first portion and a second portion of a separated sternum, the anchor assembly comprising:

an anchor comprising:

a body locatable in a bone tunnel of one or more of the first portion and the second portion of the sternum and locatable between the first portion and the second portion of the sternum, the body including an end portion, the body defining a first bore and a second bore each extending through a top portion and a bottom portion of the body, the body including a first lock integral to the body and extending at least partially into the first bore, and the body including a second lock integral to the body and extending at least partially into the second bore, wherein the body has a cylindrical shape configured for insertion into the bone tunnel, and wherein the first lock and the second lock extend from an outer surface of the body into openings of an outer wall of the body; and

a collar connected to and extending laterally outward from the end portion of the body, the collar engageable with an outer surface of the sternum to limit movement of the body into the bone tunnel; and

a cerclage integrally formed with the anchor, the cerclage including a first element configured to at least partially surround the first portion of the separated sternum, the

cerclage including a second element configured to at least partially surround the second portion of the separated sternum, and the first portion insertable at least partially into the first bore to engage the first lock to secure the first element to the anchor, and the second portion insertable at least partially into the second bore to engage the second lock to secure the second element to the anchor and to secure the cerclage and the anchor the sternum and to secure the first portion of the separated sternum to the second portion of the separated sternum.

8. The anchor assembly of claim **7**, wherein the collar has a diameter that is larger than a diameter of the body.

9. The anchor assembly of claim **7**, wherein the first lock and the second lock extend from an outer surface of the body into the first bore and the second bore, respectively.

10. The anchor assembly of claim **7**, wherein the collar is configured to engage a top surface of the sternum when the body is inserted into the bone tunnel to limit movement of the anchor into the bone tunnel.

11. The anchor assembly of claim **7**, wherein the body forms a projection engageable with the sternum to form a bone tunnel in the first portion of the sternum.

12. The anchor assembly of claim **7**, wherein the first lock and the second lock extend from an outer surface of the body into openings of an outer wall of the body.

* * * * *