US012575867B2

(12) **United States Patent**
Teston et al.

(10) **Patent No.: US 12,575,867 B2**
(45) **Date of Patent: Mar. 17, 2026**

(54) **PECTUS BAR AND STABILIZER DEVICES AND METHODS**

(71) Applicant: **Zimmer Biomet CMF and Thoracic, LLC**, Jacksonville, FL (US)

(72) Inventors: **Kevin Lee Teston**, Jacksonville, FL (US); **Saddy Rodolfo Garcia**, St. Augustine, FL (US); **Barclay R. Davis**, Jacksonville, FL (US); **Bryan Wilcox**, St. Augustine, FL (US); **Nicholas Soroka**, Jacksonville, FL (US); **Ely Lucus Knowles**, Jacksonville, FL (US); **T. Shay O'Brien, II**, St. Johns, FL (US)

(73) Assignee: **Zimmer Biomet CMF and Thoracic, LLC**, Jacksonville, FL (US)

(*) Notice: Subject to any disclaimer, the term of this patent is extended or adjusted under 35 U.S.C. 154(b) by 48 days.

(21) Appl. No.: **18/597,360**

(22) Filed: **Mar. 6, 2024**

(65) **Prior Publication Data**

US 2024/0299070 A1 Sep. 12, 2024

Related U.S. Application Data

(60) Provisional application No. 63/450,202, filed on Mar. 6, 2023.

(51) **Int. Cl.**
A61B 17/80 (2006.01)

(52) **U.S. Cl.**
CPC ***A61B 17/8076*** (2013.01)

(58) **Field of Classification Search**
CPC A61B 17/8076; A61B 17/7041; A61B 17/7047; A61B 17/7055; A61B 17/7056; A61B 17/707
See application file for complete search history.

(56) **References Cited**

U.S. PATENT DOCUMENTS

4,201,215 A 5/1980 Crossett et al.
4,327,715 A 5/1982 Corvisier
(Continued)

FOREIGN PATENT DOCUMENTS

CA 2076565 A1 2/1994
CA 2733507 A1 2/2010
(Continued)

OTHER PUBLICATIONS

"International Application Serial No. PCT/US2024/018732, International Preliminary Report on Patentability mailed Sep. 18, 2025", 8 pgs.
(Continued)

Primary Examiner — Jacqueline T Johanas
(74) *Attorney, Agent, or Firm* — SCHWEGMAN LUNDBERG & WOESSNER, P.A.

(57) **ABSTRACT**

A pectus bar assembly can include a first pectus bar and a second pectus bar engageable with a sternum. The pectus bar assembly can also include a first bar link connectable to the first pectus bar and translatable along the first pectus bar and can include a second bar link connectable to the second pectus bar and translatable along the second pectus bar. The pectus bar assembly can also include a bridge defining a longitudinal axis. The bridge can be connectable to the first bar link and the second bar link. The first bar link and the second bar link can be independently translatable along the bridge, and the first bar link and the second bar link can be independently rotatable about the longitudinal axis of the bridge.

20 Claims, 18 Drawing Sheets

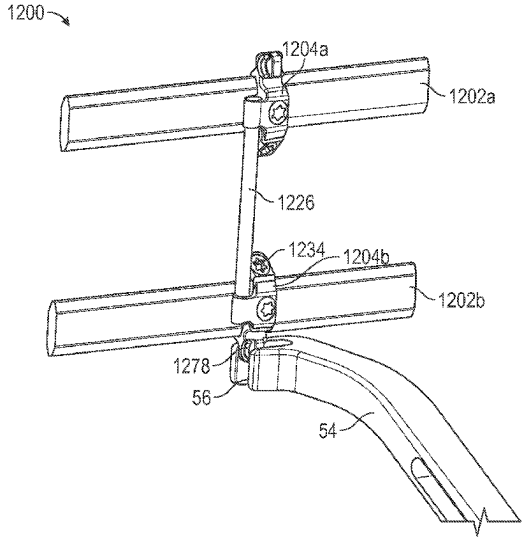

(56) **References Cited**

U.S. PATENT DOCUMENTS

5,092,889 A * 3/1992 Campbell, Jr. A61B 17/707 606/74
6,007,538 A 12/1999 Levin
6,024,759 A 2/2000 Nuss et al.
6,872,210 B2 3/2005 Hearn
6,881,215 B2 * 4/2005 Assaker A61B 17/7044 606/279
7,029,472 B1 * 4/2006 Fortin A61B 17/7014 606/57
7,156,847 B2 1/2007 Abramson
7,229,422 B2 6/2007 Klobe
8,333,768 B2 12/2012 Castro
8,496,582 B2 7/2013 Winston
8,715,285 B2 5/2014 Lewis et al.
8,777,952 B2 7/2014 Bardají
8,876,823 B2 11/2014 Li et al.
9,138,272 B2 9/2015 Roman et al.
9,204,899 B2 * 12/2015 Buttermann A61B 17/707
9,308,112 B2 4/2016 Kazerooni et al.
9,314,285 B2 4/2016 Reisberg
9,339,388 B2 5/2016 Dartevelle
9,668,792 B2 6/2017 Roman et al.
9,743,968 B2 8/2017 Litch et al.
9,827,026 B1 11/2017 Tulenko
9,833,269 B2 12/2017 Park
9,872,708 B2 1/2018 Park
10,058,364 B2 8/2018 Garcia
10,143,505 B2 12/2018 Bardají
10,206,719 B2 * 2/2019 Goel A61B 17/7032
10,376,295 B1 8/2019 Tulenko
10,531,901 B2 1/2020 Su
10,617,455 B2 4/2020 Maxson
10,687,875 B2 * 6/2020 Smits A61B 17/7053
10,722,279 B2 7/2020 Balzano et al.
10,820,931 B2 11/2020 Garcia et al.
12,279,797 B2 * 4/2025 Ferro A61B 17/68
2002/0143336 A1 10/2002 Hearn
2004/0117016 A1 6/2004 Abramson
2004/0204713 A1 10/2004 Abdou
2005/0049595 A1 3/2005 Suh et al.
2005/0240181 A1 * 10/2005 Boomer A61B 17/7074 606/280
2006/0058786 A1 3/2006 Kim et al.
2006/0074448 A1 4/2006 Harrison et al.
2006/0089648 A1 4/2006 Masini
2006/0235278 A1 10/2006 Winston
2006/0259141 A1 11/2006 Roman et al.
2007/0276378 A1 11/2007 Harrison et al.
2008/0082101 A1 4/2008 Reisberg
2009/0210056 A1 8/2009 Forsell
2009/0264933 A1 * 10/2009 Carls A61B 17/7041 606/264
2010/0004697 A1 * 1/2010 Fortin ..... A61B 17/66 606/86 R
2010/0100142 A1 4/2010 Park
2010/0137913 A1 * 6/2010 Khatchadourian A61B 17/7056 606/279
2010/0256691 A1 10/2010 Park
2011/0166612 A1 7/2011 Bardaji
2011/0184411 A1 7/2011 Mckenzie et al.
2011/0208255 A1 8/2011 Su
2011/0251540 A1 10/2011 Notrica
2012/0130371 A1 5/2012 Li et al.
2013/0204310 A1 8/2013 Roman et al.
2013/0211404 A1 8/2013 Mckenzie et al.
2014/0135853 A1 5/2014 Reisberg
2014/0163691 A1 6/2014 Dartevelle
2014/0214103 A1 7/2014 Roman et al.
2014/0350613 A1 11/2014 Bardají Pascual
2014/0358150 A1 12/2014 Kaufman et al.
2015/0080953 A1 * 3/2015 Otte A61B 17/7004 606/252
2015/0134009 A1 5/2015 Licht et al.
2015/0190174 A1 * 7/2015 McCarthy A61B 17/7032 606/246
2015/0190178 A1 * 7/2015 McCarthy A61B 17/7049 606/279
2016/0015430 A1 * 1/2016 Buttermann A61B 17/7032 29/434
2016/0074078 A1 3/2016 Roman et al.
2016/0183981 A1 * 6/2016 Schlaepfer A61B 17/7056 606/324
2016/0310262 A1 10/2016 Doucet et al.
2016/0367301 A1 12/2016 Madjarov
2017/0049554 A1 2/2017 Li et al.
2017/0156759 A1 6/2017 Park
2017/0238981 A1 8/2017 Madjarov et al.
2018/0021074 A1 1/2018 Smiths et al.
2018/0228523 A1 8/2018 Balzano et al.
2018/0228524 A1 8/2018 Garcia et al.
2018/0256227 A1 9/2018 Maxson
2018/0303527 A1 10/2018 Su
2018/0310973 A1 11/2018 Son et al.
2019/0059964 A1 2/2019 Notrica
2019/0069938 A1 3/2019 Martinez-Ferro et al.
2019/0117272 A1 * 4/2019 Klausman A61B 17/7052
2019/0314072 A1 10/2019 Uemura et al.
2019/0374267 A1 12/2019 Madey
2020/0197058 A1 6/2020 Maxson
2020/0315676 A1 10/2020 Balzano et al.
2021/0022782 A1 * 1/2021 Martinez Ferro A61B 17/808
2021/0212732 A1 * 7/2021 Assaker A61B 17/7013
2022/0361933 A1 * 11/2022 Italiaie A61B 17/8685

FOREIGN PATENT DOCUMENTS

CA 2551805 C 7/2014
CA 3030168 A1 1/2018
CA 3054790 A1 9/2018
CA 3059921 A1 10/2018
CN 217066554 U 7/2022
EP 583520 A1 2/1994
EP 1691702 A1 8/2006
EP 2326269 A1 6/2011
EP 2326269 B1 10/2013
EP 2699180 A1 2/2014
EP 2699180 B1 4/2015
EP 3612112 A1 2/2020
EP 3612112 A4 11/2020
KR 20170085280 A * 7/2017 ..... A61B 17/66
KR 20180023315 A * 3/2018 ..... A61B 17/56
WO WO-2005055844 A1 6/2005
WO WO-2008114915 A1 9/2008
WO WO-2009028836 A2 3/2009
WO WO-2009028836 A3 5/2009
WO WO-2011017962 A1 2/2011
WO WO-2013182545 A1 * 12/2013 ..... A61B 17/823
WO WO-2014153525 A2 9/2014
WO WO-2014153525 A3 11/2014
WO WO-2015056204 A1 * 4/2015 ..... A61L 27/58
WO WO-2016130154 A1 * 8/2016 ..... A61B 17/7053
WO WO-2016188953 A1 12/2016
WO WO-2017023147 A1 * 2/2017 ..... A61B 17/8076
WO WO-2017157802 A1 9/2017
WO WO-2018013594 A1 1/2018
WO WO-2018037385 A1 3/2018
WO WO-2018128089 A1 7/2018
WO WO-2018164808 A1 9/2018
WO WO-2018195235 A1 10/2018
WO WO-2019046626 A1 3/2019
WO WO-2019197391 A1 * 10/2019 ..... A61B 17/808
WO WO-2020106243 A2 5/2020
WO WO-2020106243 A3 7/2020

OTHER PUBLICATIONS

"International Application Serial No. PCT/US2024/018732, International Search Report mailed Jul. 4, 2024", 4 pgs.

(56) **References Cited**

OTHER PUBLICATIONS

"International Application Serial No. PCT/US2024/018732, Written Opinion mailed Jul. 4, 20 24", 6 pgs.

* cited by examiner

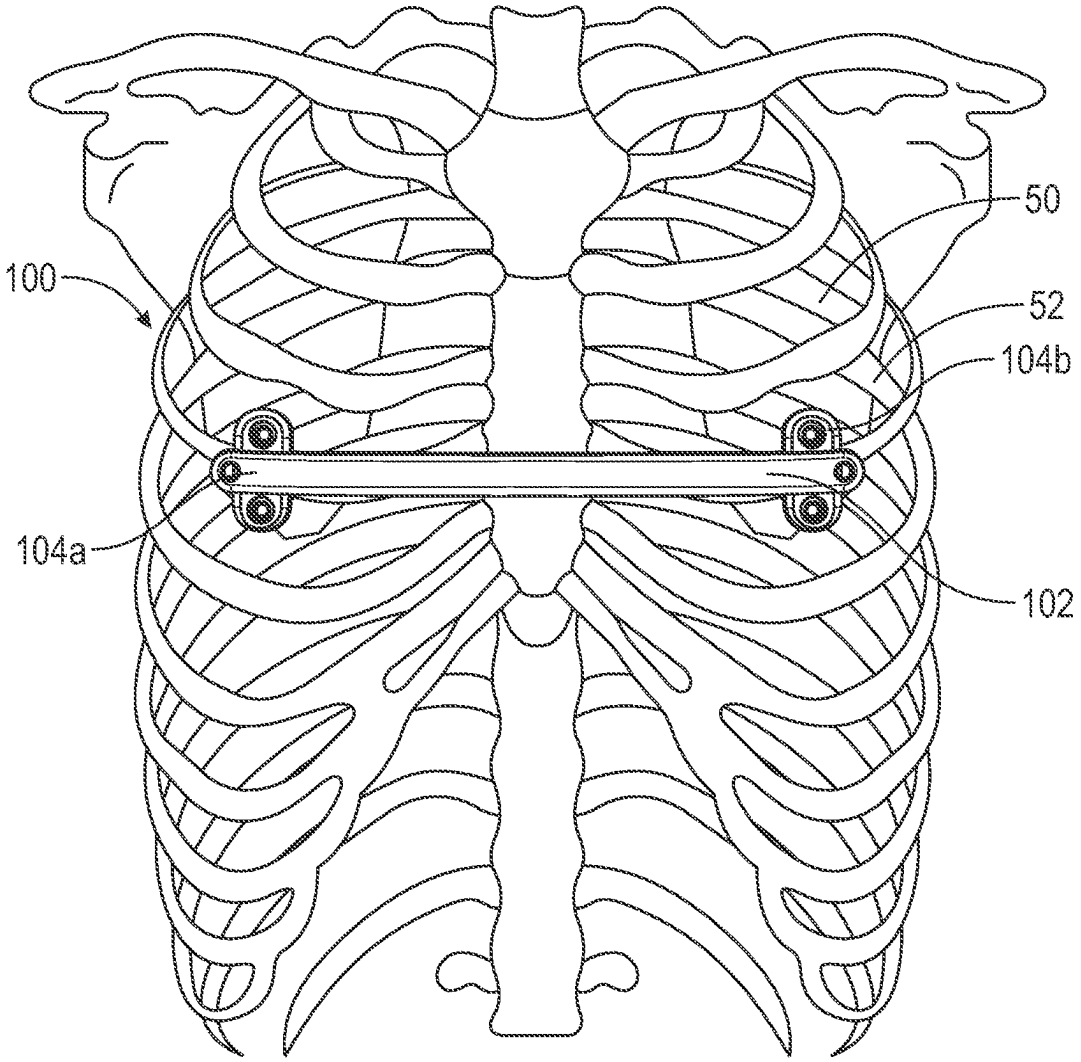

FIG. 1

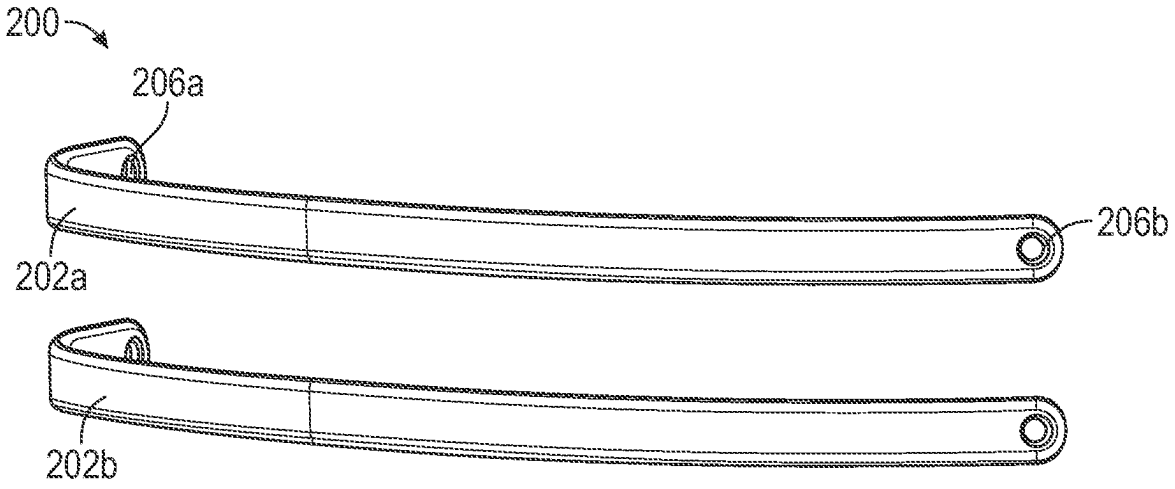
200
206a
206b
202a
202b

FIG. 2

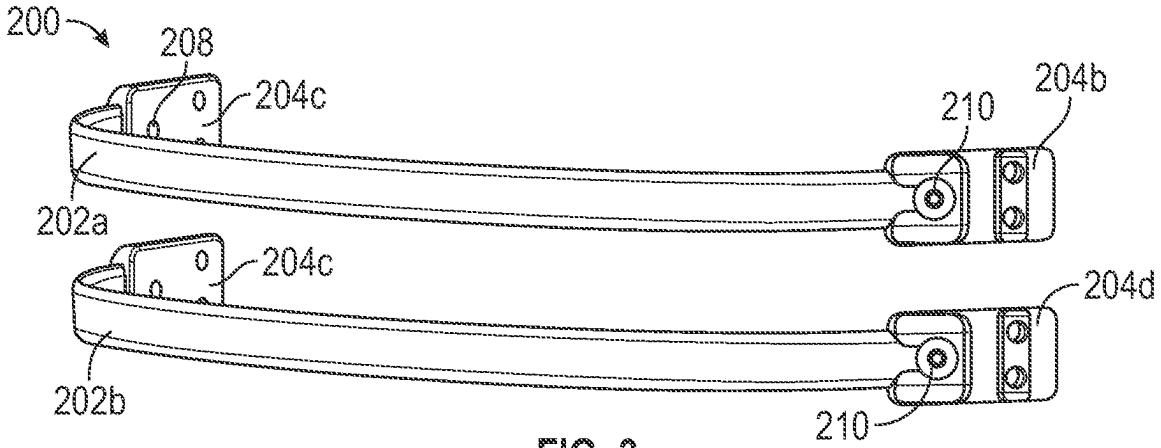
200
208
204c
210
204b
202a
204c
204d
202b
210

FIG. 3

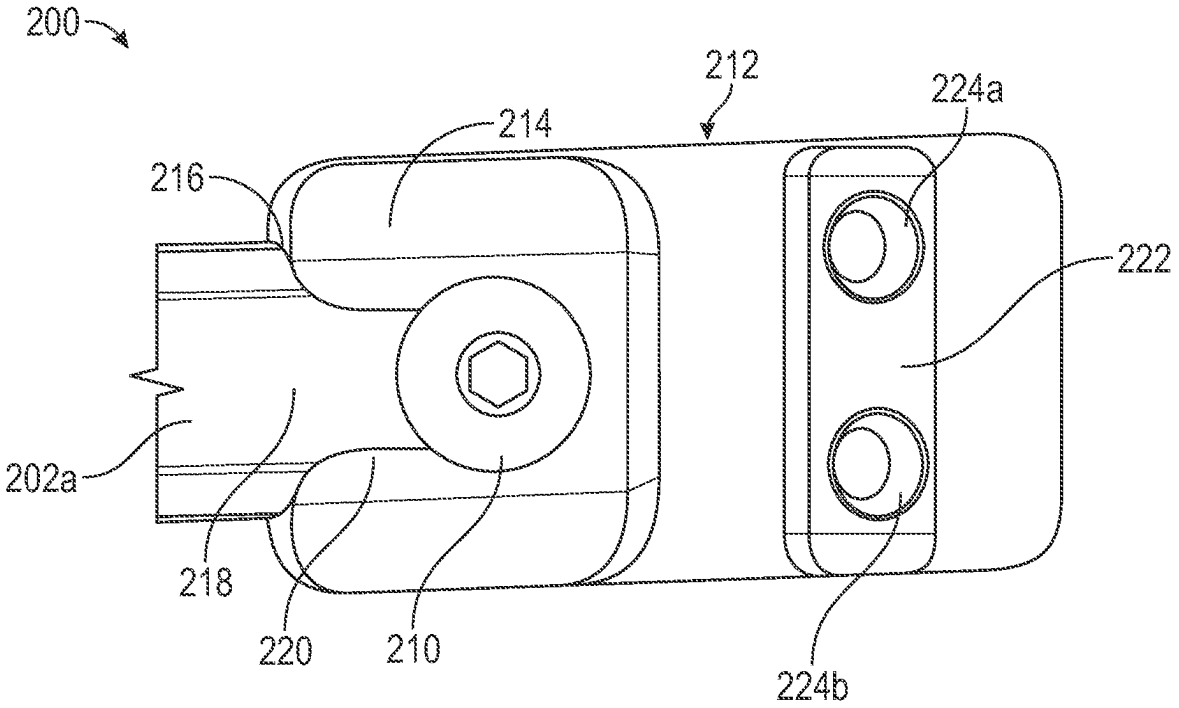

FIG. 3A

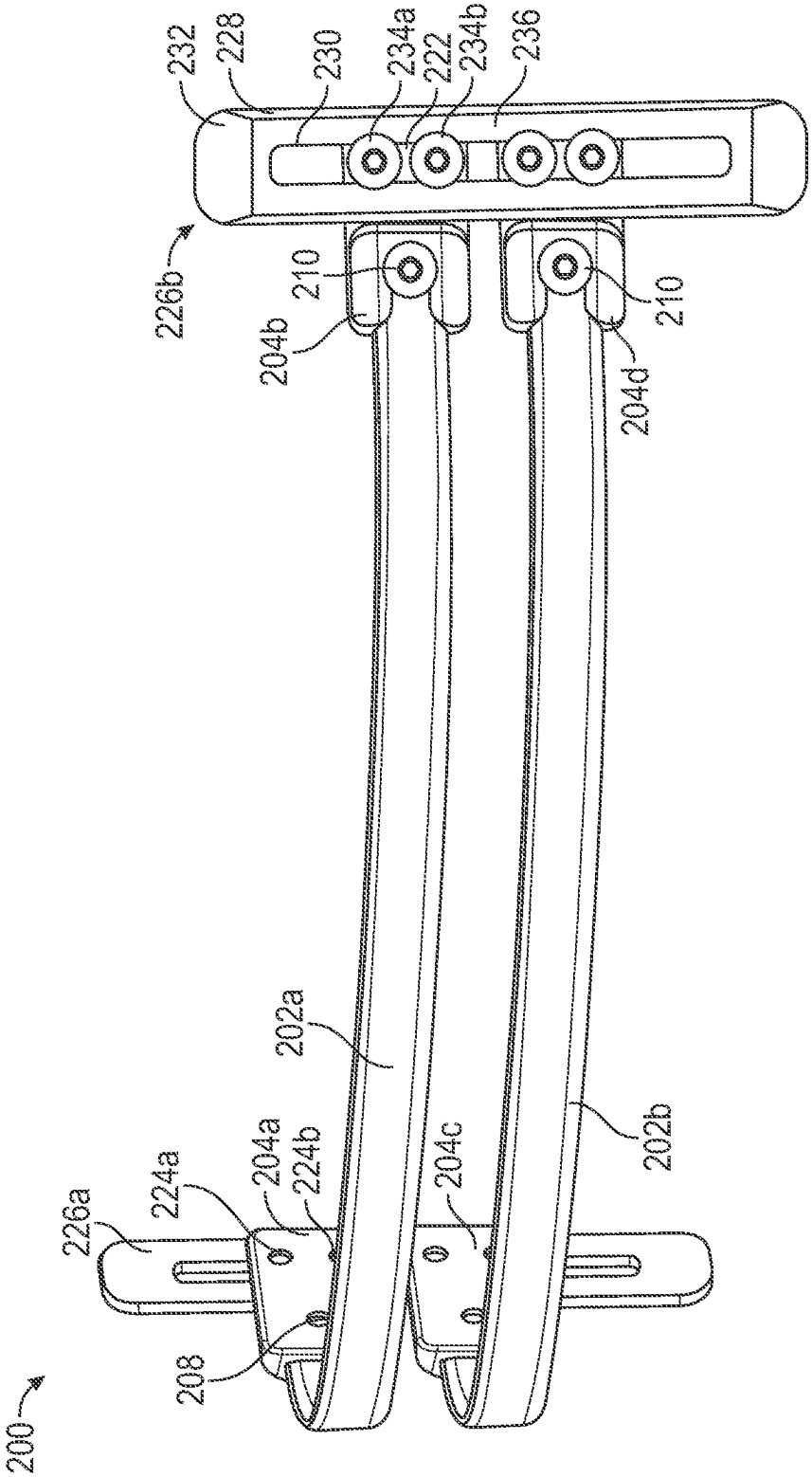
232
228
230
234a
222
234b
236
226b
210
204b
210
204d
202a
202b
204a
224b
204c
224a
226a
208
200

FIG. 4

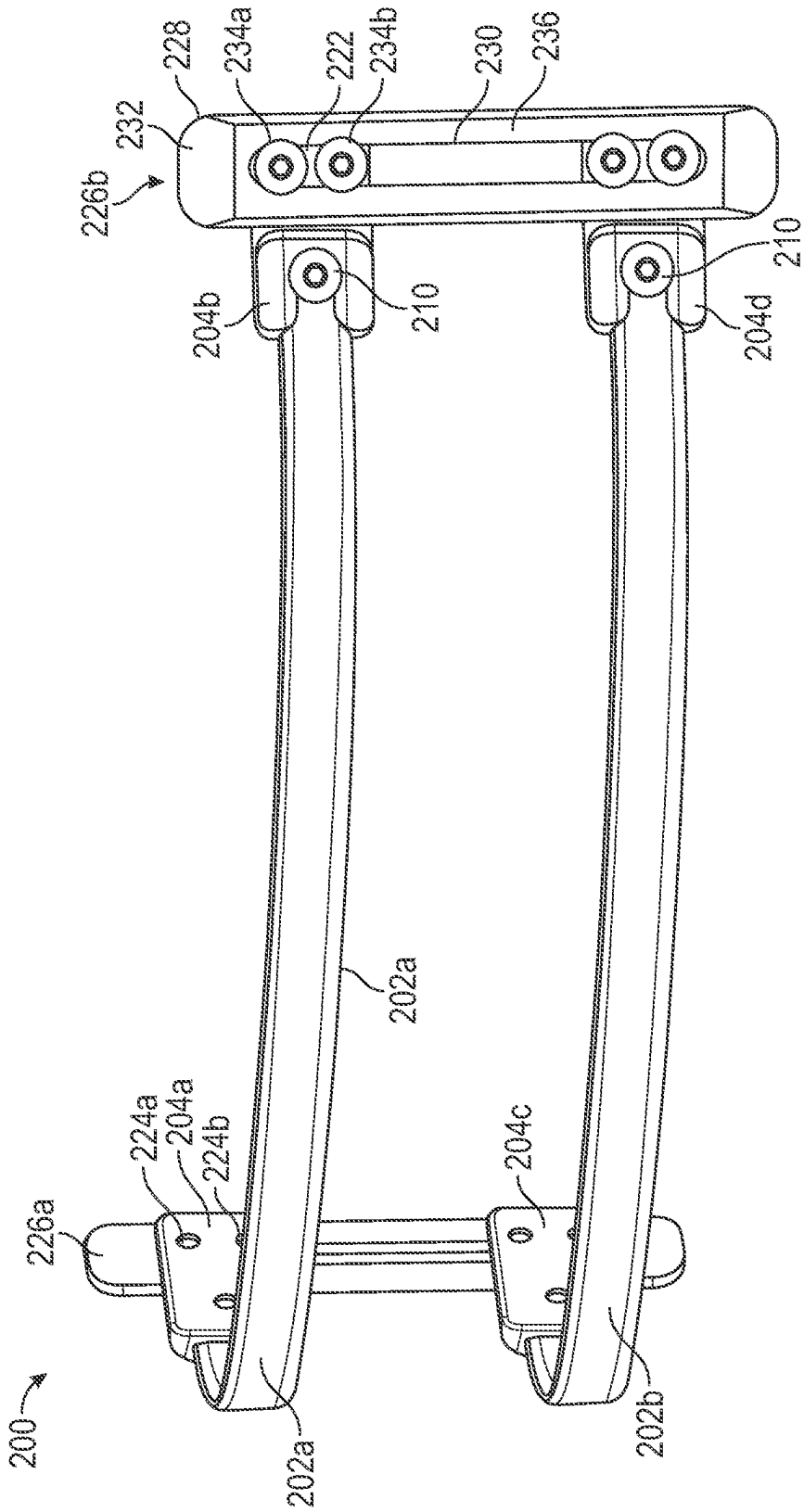
200
226a
224a
204a
224b
202a
202a
204c
202b
226b
232
228
234a
222
234b
230
236
204b
210
210
204d

FIG. 5

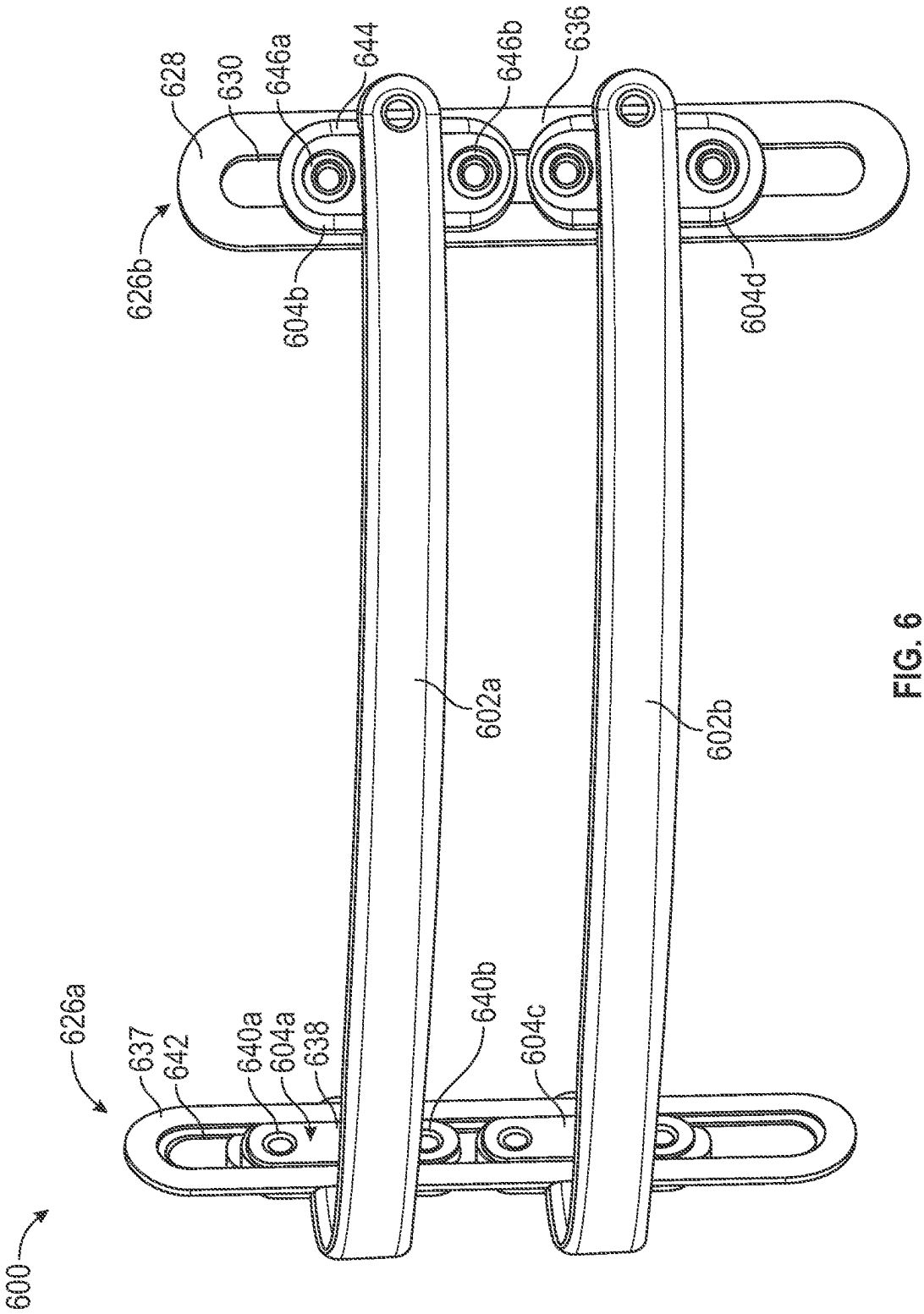
600
626a
637
642
640a
604a
638
640b
604c
602a
602b
626b
604b
628
630
646a
644
646b
636
604d

FIG. 6

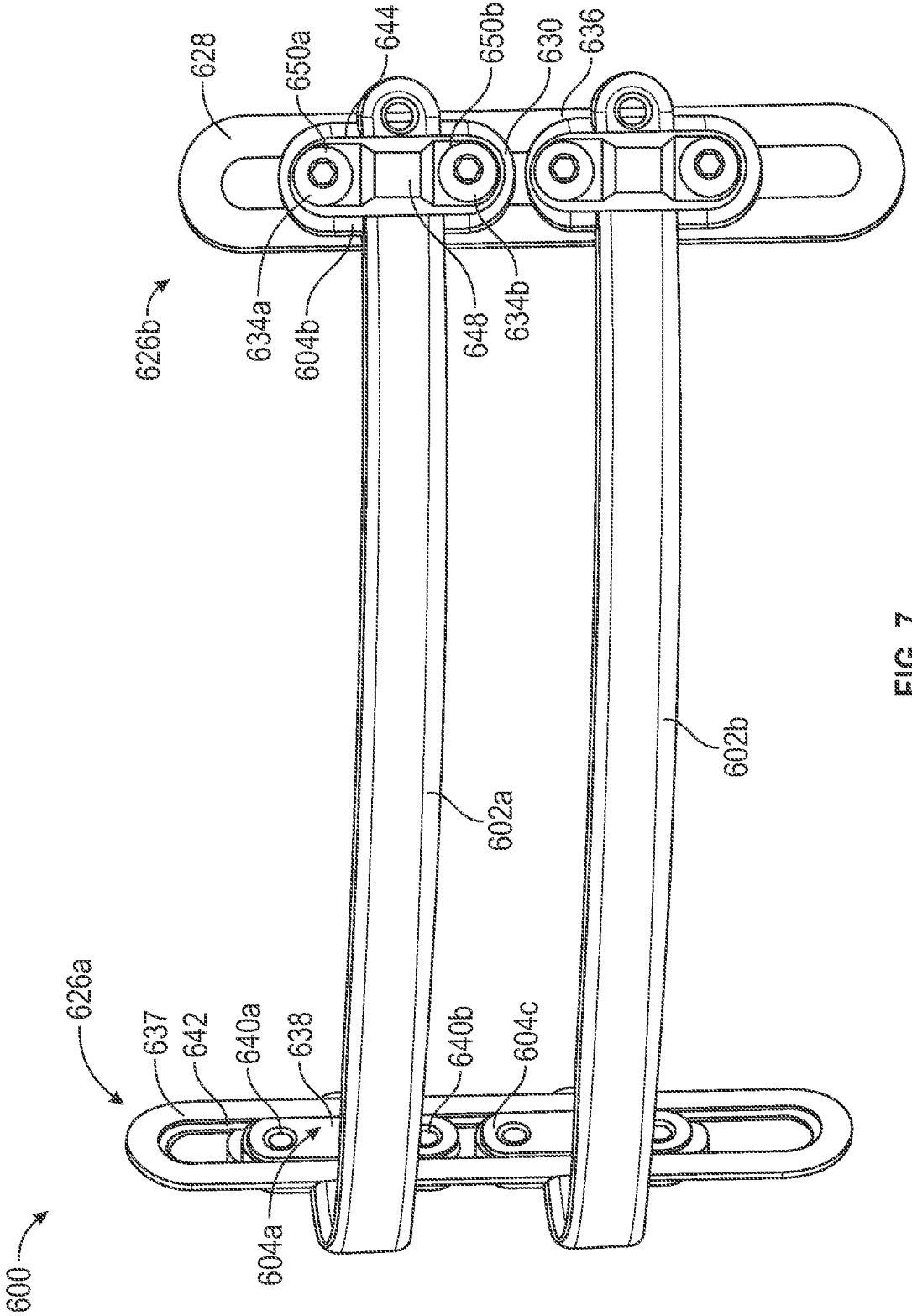
628
650a
644
650b
630
636
626b
634a
604b
648
634b
602a
602b
626a
637
642
640a
638
640b
604c
604a
600

FIG. 7

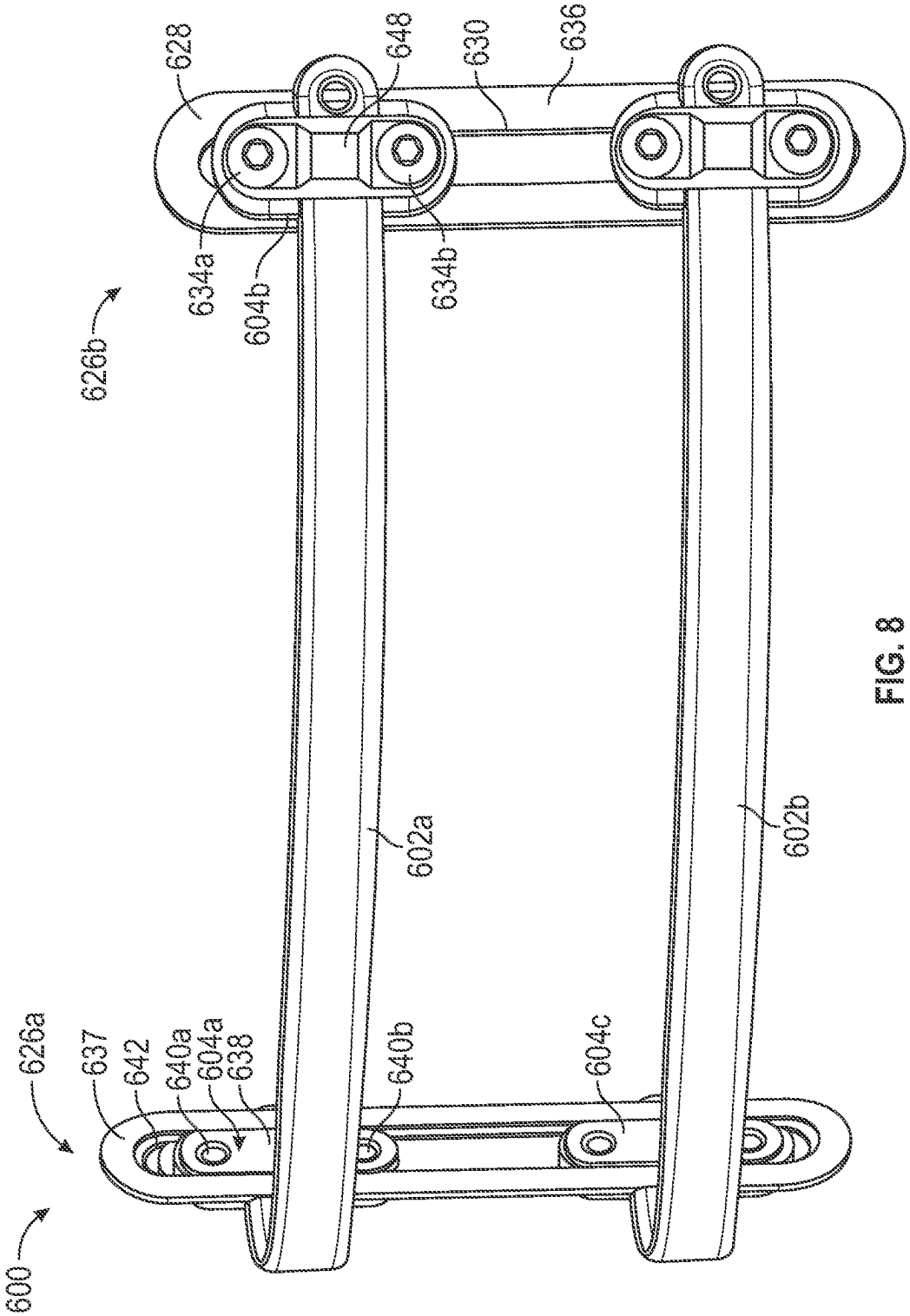
628
648
630
636
634a
604b
634b
626b
602a
602b
626a
637
642
640a
604a
638
640b
604c
600

FIG. 8

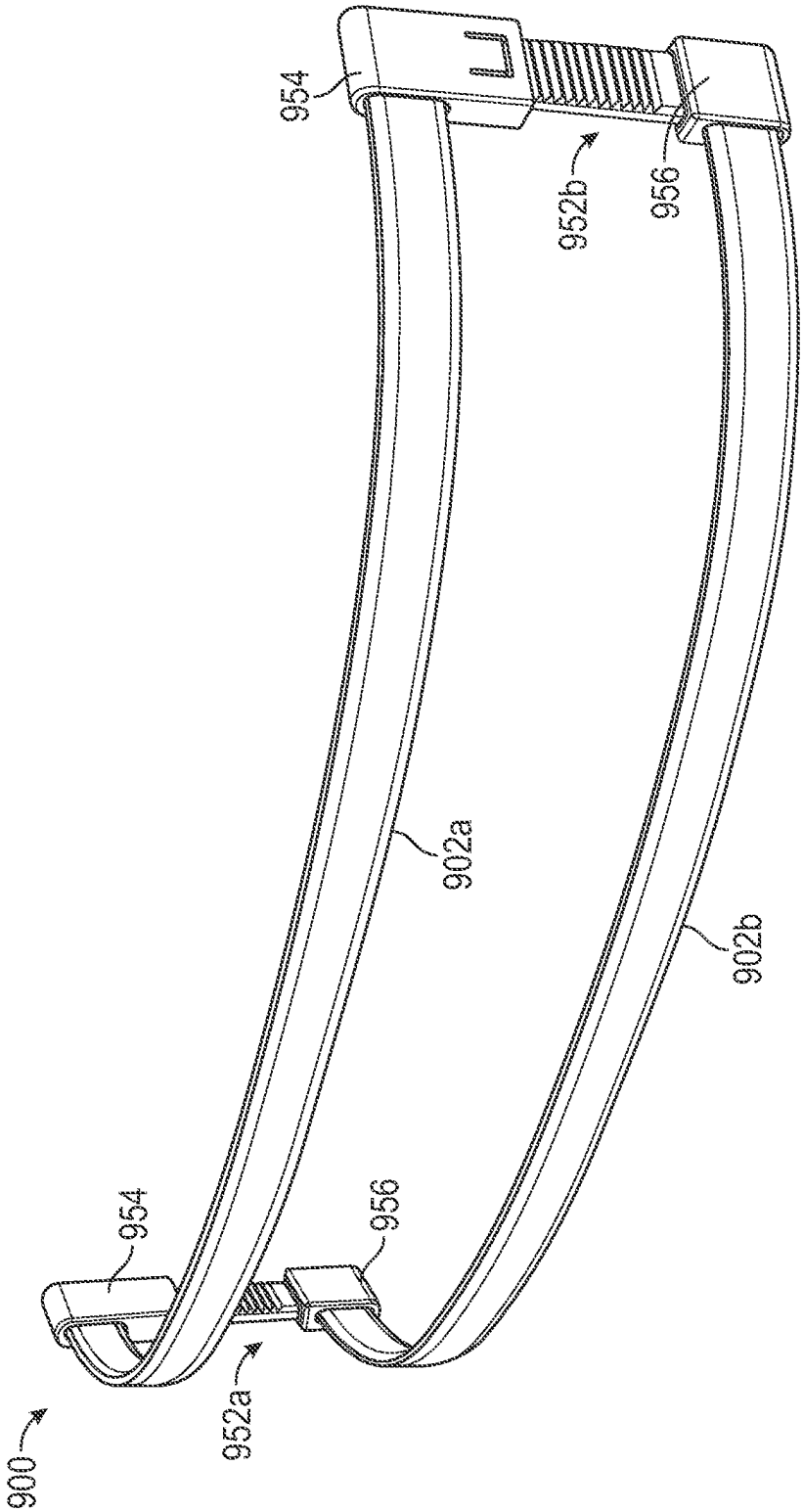

FIG. 9

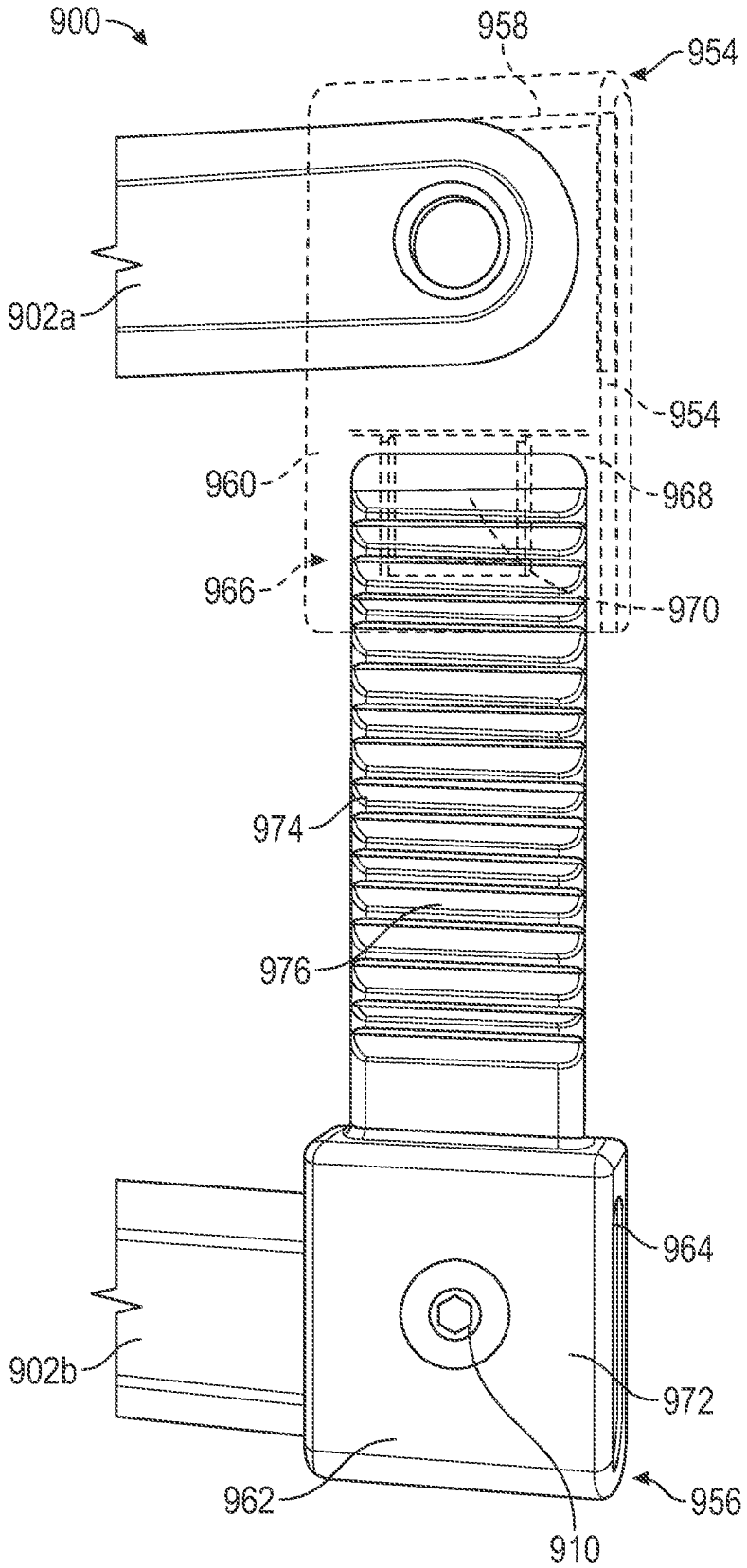
900
958
954
902a
954
960
968
966
970
974
976
964
902b
972
962
956
910

FIG. 10

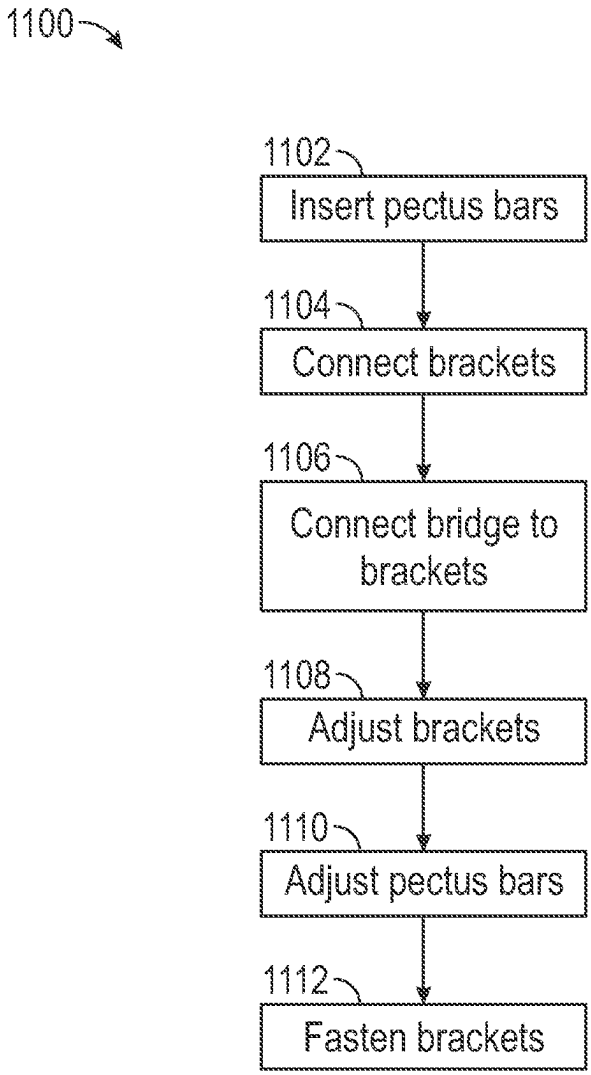
1100
1102
Insert pectus bars
1104
Connect brackets
1106
Connect bridge to brackets
1108
Adjust brackets
1110
Adjust pectus bars
1112
Fasten brackets

FIG. 11

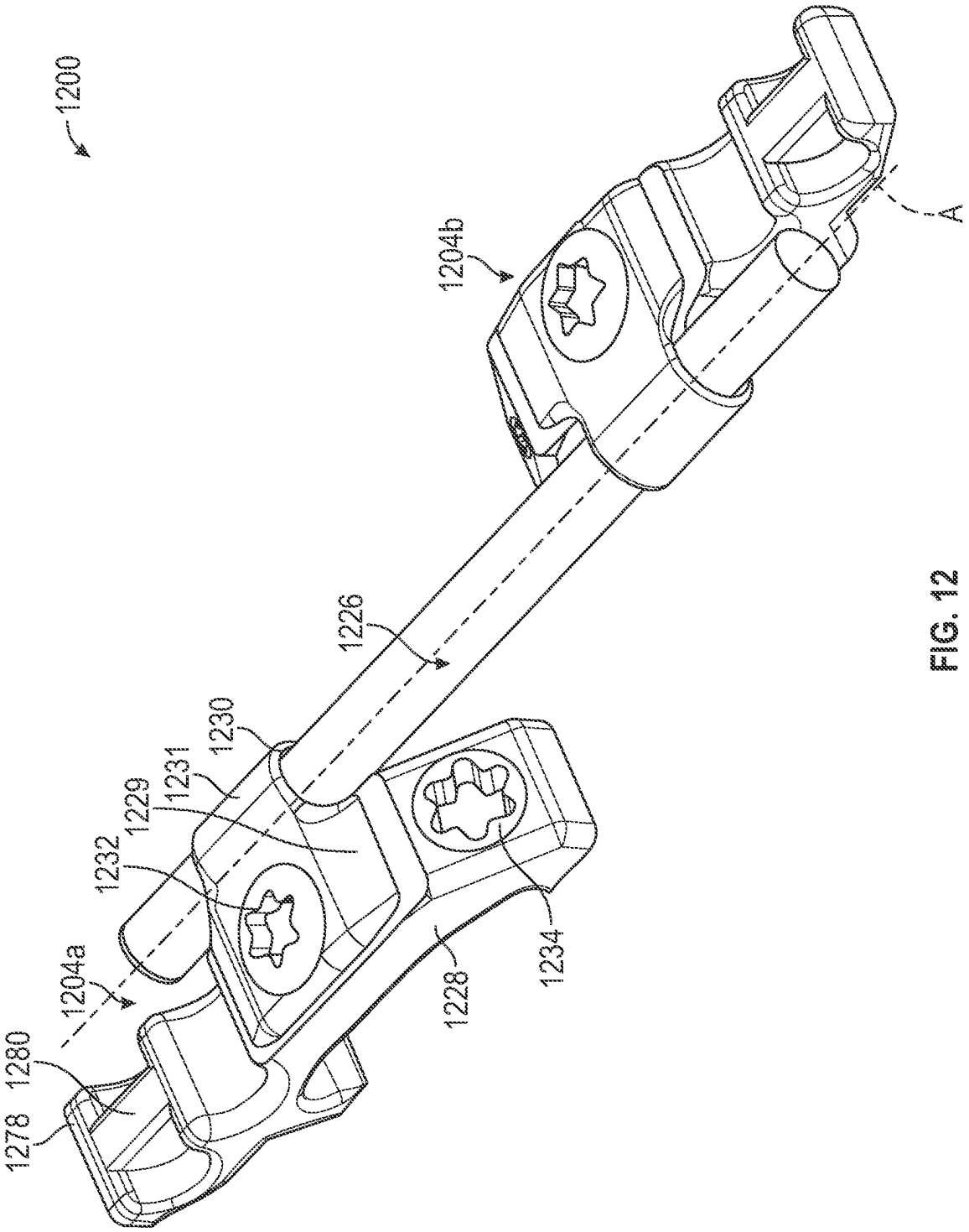
1200
1204b
A
1226
1230
1231
1229
1232
1204a
1280
1278
1228
1234

FIG. 12

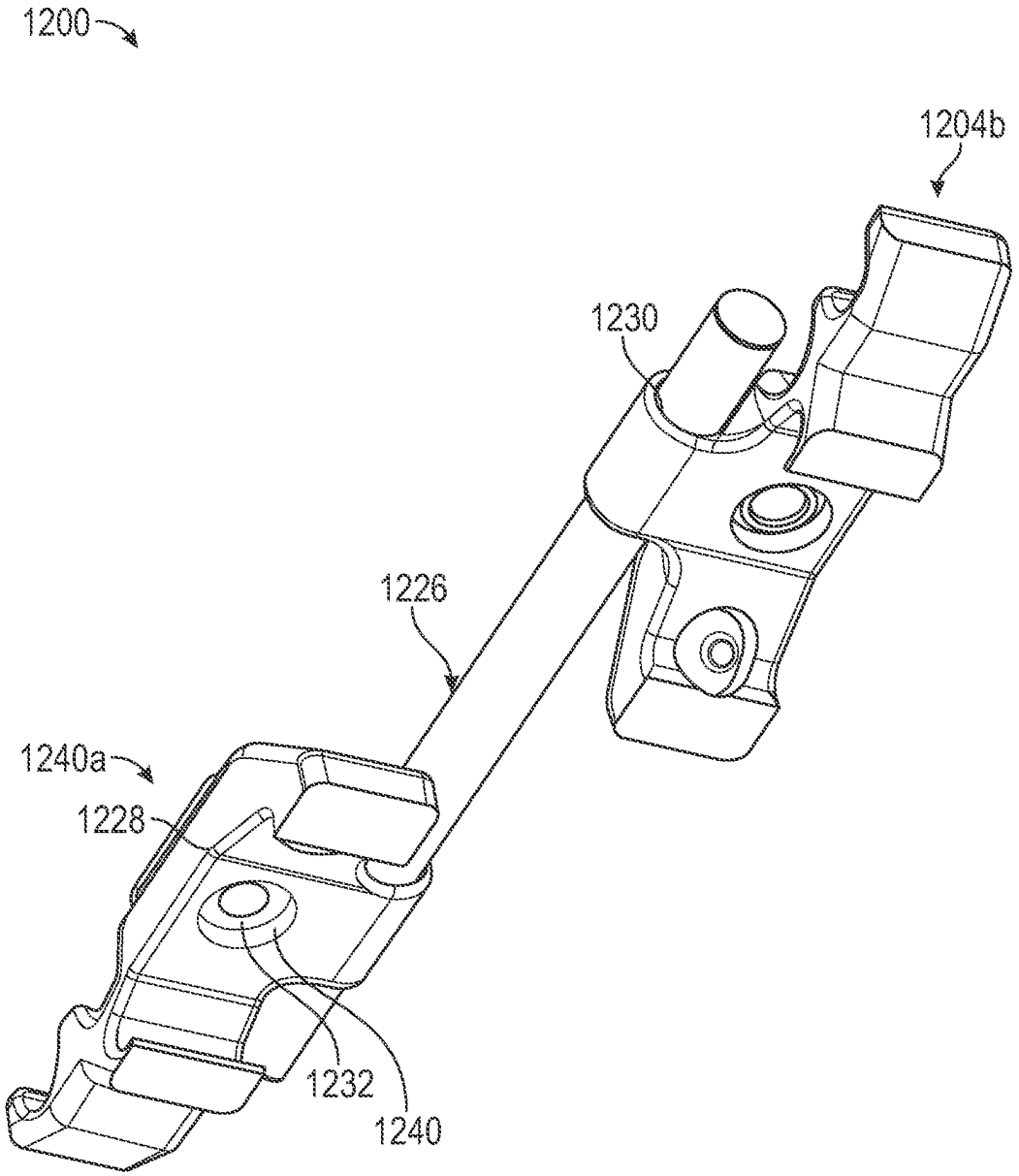

FIG. 13

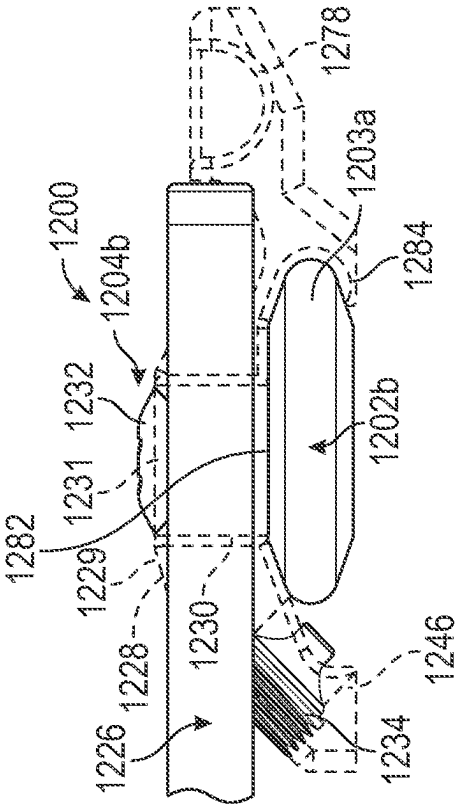

FIG. 15

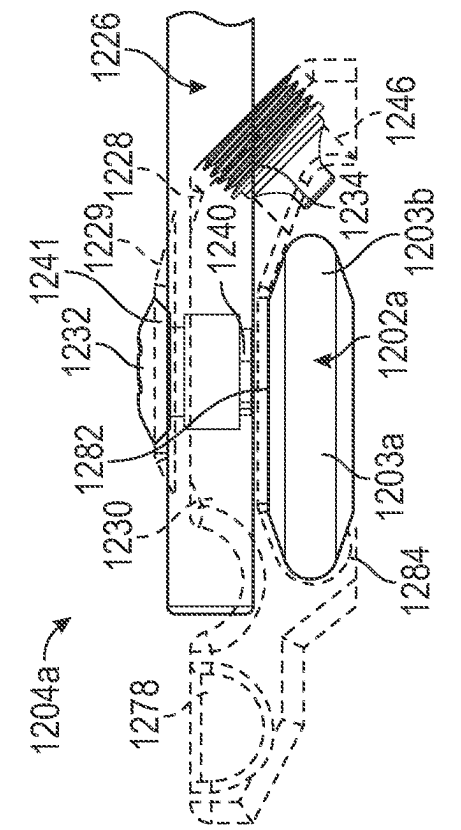

FIG. 14

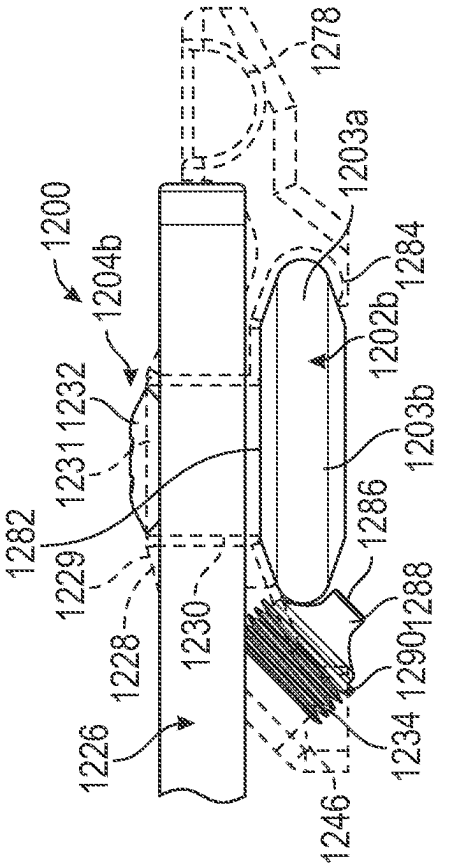

FIG. 17

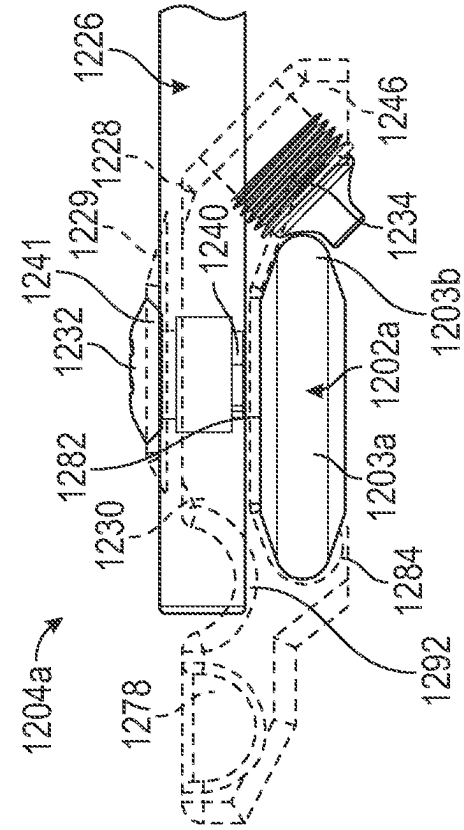

FIG. 16

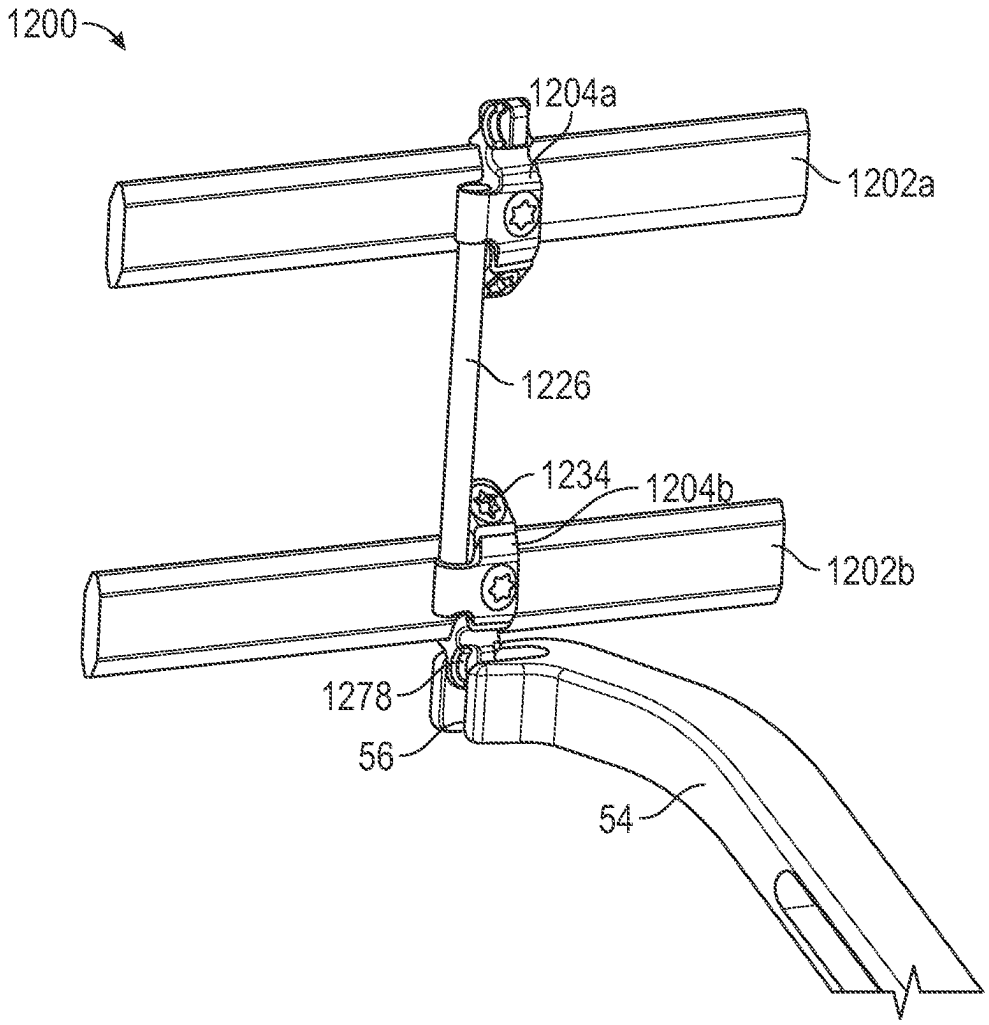

FIG. 18

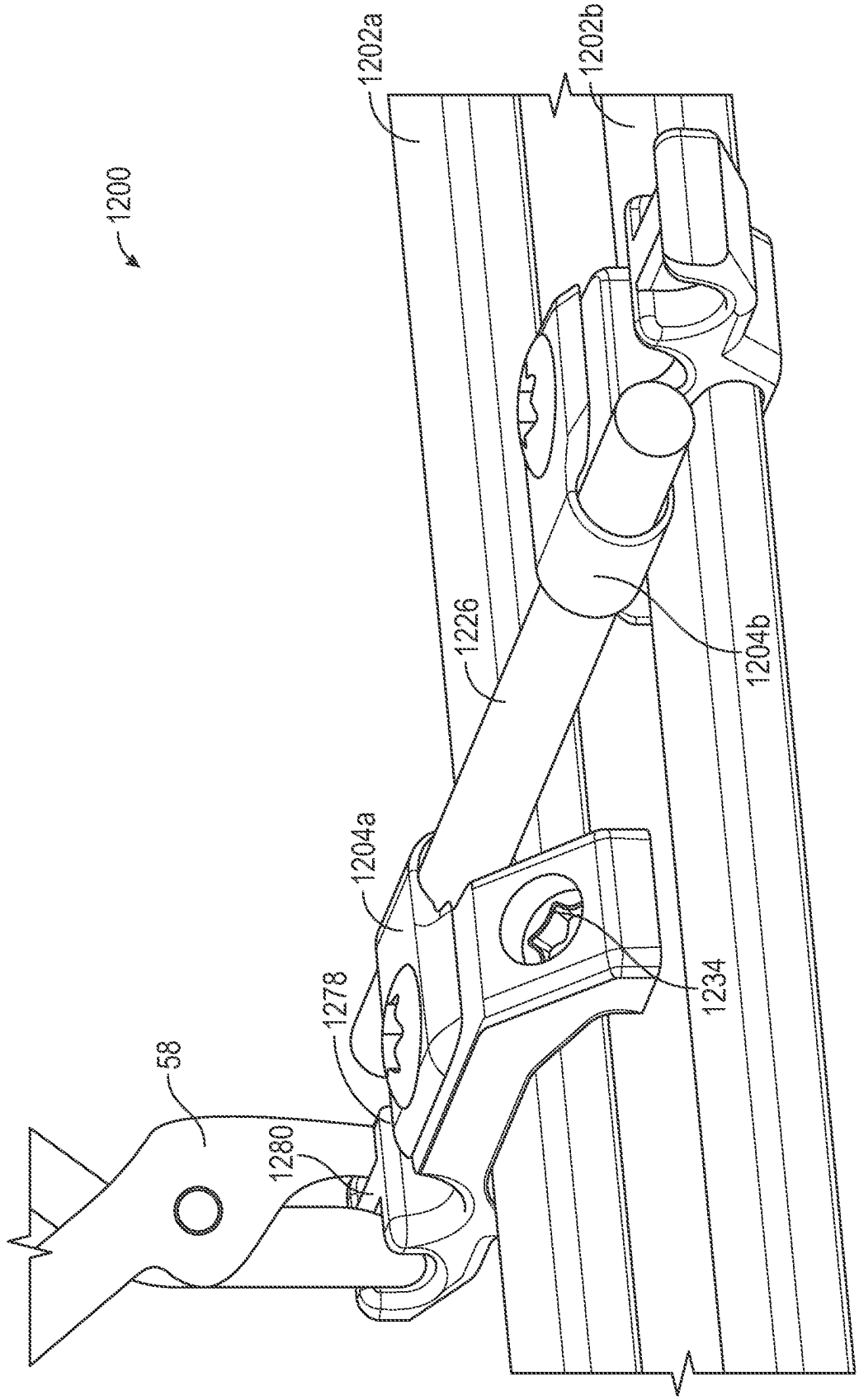

FIG. 19

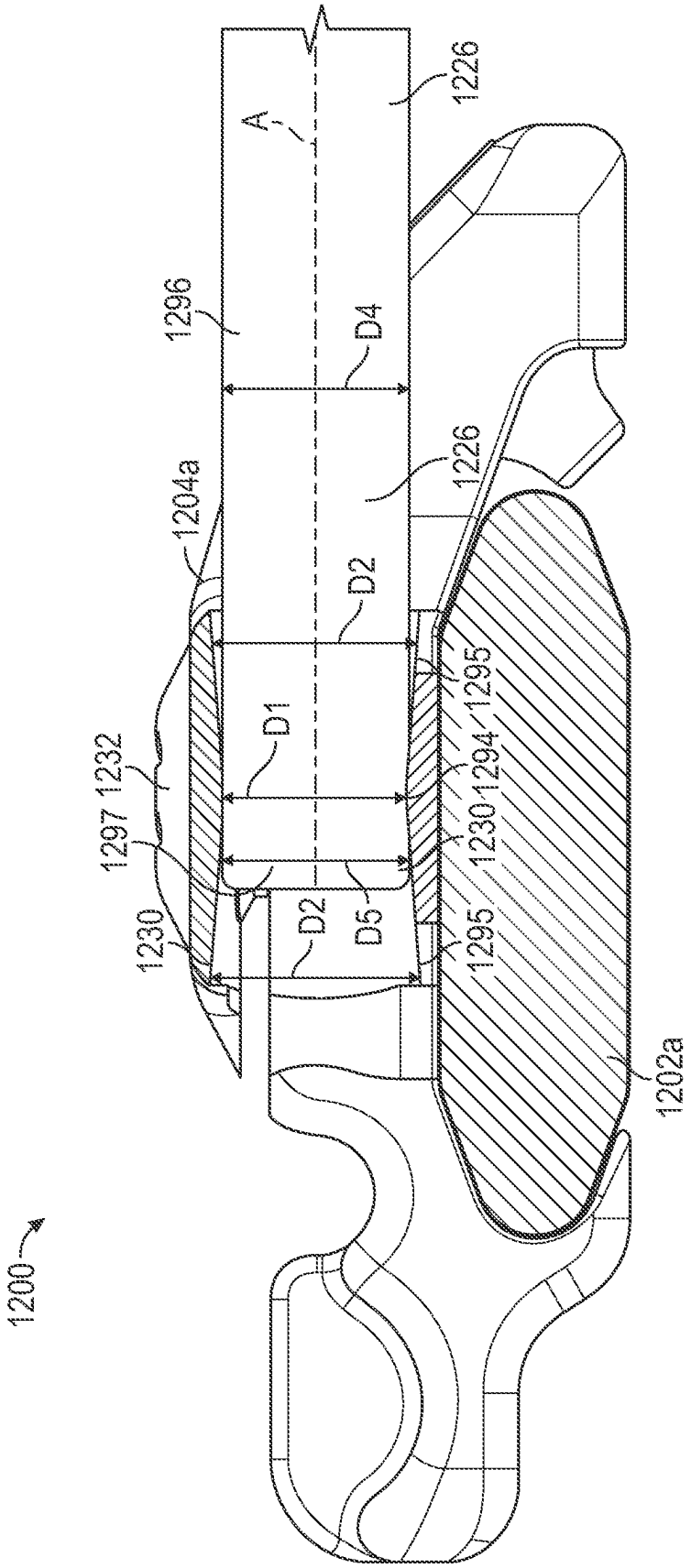
1200
1230
1297
1232
1204a
1296
A
1226
D4
D2
D1
D5
D2
1226
1295
1294
1230
1295
1202a

FIG. 20

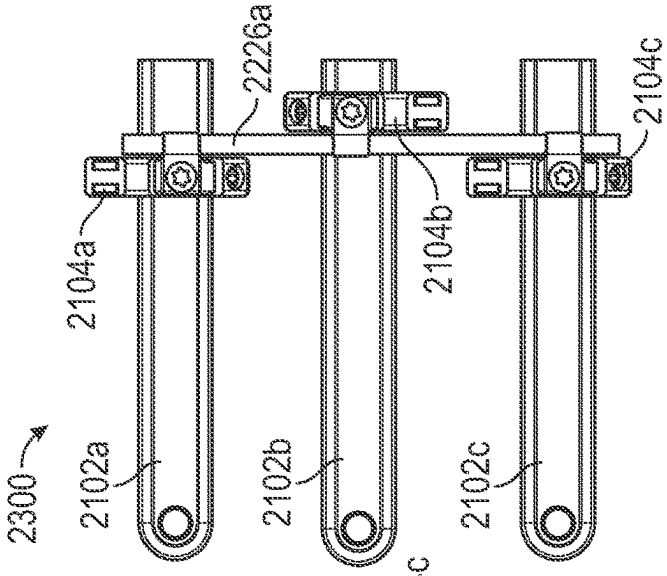

FIG. 23

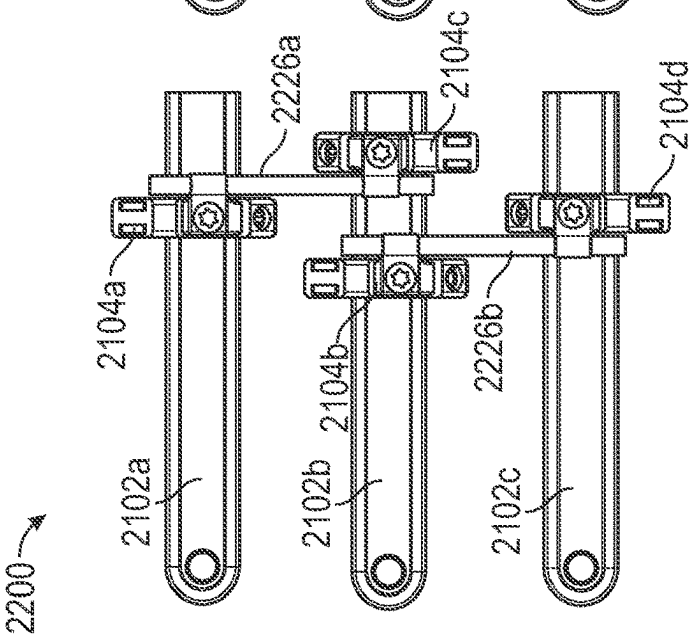

FIG. 22

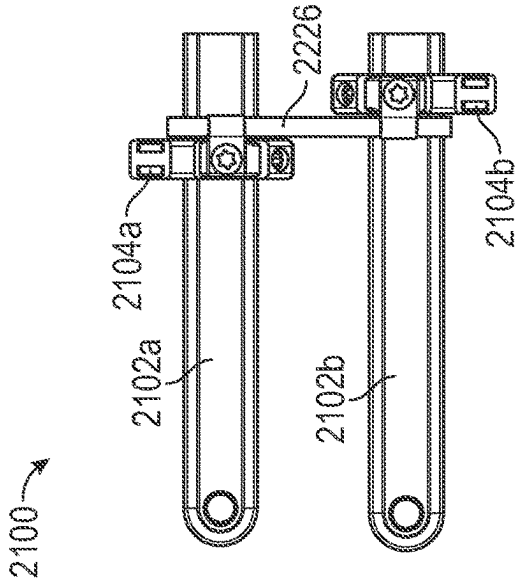

FIG. 21

PECTUS BAR AND STABILIZER DEVICES AND METHODS

CLAIM OF PRIORITY

This patent application claims the benefit of priority, under 35 U.S.C. Section 119(e), to first named inventor, Shay O'Brien, U.S. Patent Application Ser. No. 63/450,202, entitled "PECTUS BAR AND STABILIZER DEVICES AND METHODS," filed on Mar. 6, 2023, which is hereby incorporated by reference herein in its entirety.

BACKGROUND

Pectus excavatum and pectus carinatum are conditions affecting a human rib cage which can result from a congenital disorder or injury. In some cases of pectus excavatum and pectus carinatum, physicians install hardware into a patient's ribcage to reshape the ribcage. During a procedure a pectus excavatum correction procedure, one or more pectus bars can be inserted into a thoracic cavity of the patient, at least partially intrathoracically. The bar can then be flipped to force the sternum and rib cage into a proper position, and ends of the bar(s) can be secured to one or more ribs.

BRIEF DESCRIPTION OF THE DRAWINGS

In the drawings, which are not necessarily drawn to scale, like numerals may describe similar components in different views. Like numerals having different letter suffixes may represent different instances of similar components. The drawings illustrate generally, by way of example, but not by way of limitation, various embodiments discussed in the present document.

FIG. **1** illustrates an X-ray image of a pectus bar assembly installed in a ribcage of a patient.

FIG. **2** illustrates an isometric view of a portion of a pectus bar assembly.

FIG. **3** illustrates an isometric view of a portion of a pectus bar assembly.

FIG. **3**A illustrates an isometric view of a portion of a pectus bar assembly.

FIG. **4** illustrates an isometric view of a pectus bar assembly in a first configuration.

FIG. **5** illustrates an isometric view of a pectus bar assembly in a second configuration.

FIG. **6** illustrates an isometric view of a portion of a pectus bar assembly.

FIG. **7** illustrates an isometric view of a pectus bar assembly in a first configuration.

FIG. **8** illustrates an isometric view of a pectus bar assembly in a second configuration.

FIG. **9** illustrates an isometric view of a pectus bar assembly.

FIG. **10** illustrates an enlarged isometric view of a portion of a pectus bar assembly.

FIG. **11** illustrates a schematic view of a method.

FIG. **12** illustrates an isometric view of a portion of a pectus bar assembly.

FIG. **13** illustrates an isometric view of a portion of a pectus bar assembly.

FIG. **14** illustrates a side view of a portion of a pectus bar assembly.

FIG. **15** illustrates a side view of a portion of a pectus bar assembly.

FIG. **16** illustrates a side view of a portion of a pectus bar assembly.

FIG. **17** illustrates a side view of a portion of a pectus bar assembly.

FIG. **18** illustrates an isometric view of a pectus bar assembly.

FIG. **19** illustrates an isometric view of a portion of a pectus bar assembly.

FIG. **20** illustrates a cross-sectional view of a portion of a pectus bar assembly.

FIG. **21** illustrates an isometric view of a portion of a pectus bar assembly.

FIG. **22** illustrates an isometric view of a portion of a pectus bar assembly.

FIG. **23** illustrates an isometric view of a portion of a pectus bar assembly.

DETAILED DESCRIPTION

In cases where pectus carinatum or pectus excavatum require surgical correction, a common corrective procedure includes securing a pectus bar to a patient's rib cage to reshape and stabilize the rib cage. This procedure can include the steps of: creating opposing incisions on each side of a patient's rib cage; inserting a curved pectus bar into one incision; weaving the pectus bar through ribs with the concave side of the bar facing the anterior side of the sternum; flipping the pectus bar to push against the anterior side of the sternum to expand the rib cage to a desired shape; securing the pectus bar to the rib cage; securing stabilizers to the pectus bar; securing the stabilizers to the rib cage; and, closing the incisions. Depending on the anatomy of the patient, current hardware solutions may be difficult to secure to a patient's ribs.

In some of these surgical procedures, two pectus bars are used, which can help to keep the sternum in a desired position. Hardware can be used to interconnect the pectus bars and to help prevent the bars from flipping following a procedure. However, the hardware can be relatively cumbersome and time consuming to install, while limiting adjustability. The devices and methods discussed herein can help to address these issues by including a pectus bar bridge that is simple to install and allows for easy adjustment of the pectus bars relative to each other.

For example, a pectus bar assembly can include a first pectus bar and a second pectus bar engageable with a sternum. The pectus bar assembly can also include a first bracket connectable to the first pectus bar and a second bracket connectable to the second pectus bar. The assembly can include a bridge connectable to the first bracket and the second bracket to allow the first bracket and the first pectus bar to translate along the bridge, and to allow the second bracket and the second pectus bar to translate, independently of the first pectus bar, along the bridge.

The above discussion is intended to provide an overview of subject matter of the present patent application. It is not intended to provide an exclusive or exhaustive explanation of the invention. The description below is included to provide further information about the present patent application.

FIG. **1** illustrates an X-ray image of a pectus bar assembly **100**, which can include a pectus bar **102** and stabilizers **104***a* and **104***b*. Also shown in FIG. **1** is ribcage **50**, which includes ribs **52**. FIG. **1** shows how the pectus bar **102** can be secured to a ribcage along with the stabilizers **104**. FIGS. **2-10** discuss additional details of various pectus bar assemblies and procedures.

FIG. **2** illustrates an isometric view of a portion of a pectus bar assembly **200**. FIG. **3** illustrates an isometric view of a portion of the pectus bar assembly **200**. FIGS. **2** and **3** are discussed together below. The pectus bar assembly **200** can be similar to the pectus bar assembly **100** discussed above in that the pectus bar assembly **200** can be configured to be installed in a ribcage for correction of pectus excavatum or pectus carinatum. The pectus bar assembly **200** can differ in that the pectus bar assembly **200** can include multiple pectus bars and different hardware. Any of the pectus bar assemblies discussed above or below can be modified to include the features of the pectus bar assembly **200**.

The pectus bar assembly **200** can include a pectus bar **202***a* (e.g., a first pectus bar) and a pectus bar **202***b* (e.g., a second pectus bar) (collectively referred to as pectus bars **202**). Each of the pectus bars **202** can be a rigid or semi-rigid bar constructed of materials such as metals and plastics. For example, the pectus bars **202** can be constructed of biocompatible materials such as one or more of stainless steel alloys, cobalt-chromium, titanium, titanium alloys, polyether ether ketone (PEEK), polyether ketone ketone (PEKK), or the like.

The pectus bars **202** can have an elongate body forming a curve, such as a c-shape, and can be rigid (or semi-rigid) but flexible enough to be bent to match a curvature of a patient's ribcage using tools, such as a bar bender. As shown in FIG. **2**, the pectus bars **202** can include bar bores **206***a* and **206***b* that can be located near terminations of the pectus bars **202** (e.g., the pectus bar **202***a*). The bar bores **206** can be configured to receive fasteners, such as bone screws or sutures, such as to secure the pectus bar **202** to ribs and/or soft tissues of ribcage **50**. Optionally, the bar bores **206** can be threaded.

As shown in FIG. **3**, the pectus bar assembly **200** can include stabilizers or brackets **204***a*-**204***d* (collectively referred to as stabilizers **204**). Stabilizers **204***a* and **204***b* can be connected to end portions of the pectus bar **202***a* and stabilizers **204***c* can be connected to end portions of the pectus bar **202***b*, as discussed in further detail below. Each of the stabilizers **204** can be a rigid or semi-rigid component constructed of materials such as metals and plastics. For example, the stabilizers **204** can be constructed of biocompatible such as one or more of stainless steel alloys, cobalt-chromium, titanium, titanium alloys, polyether ether ketone (PEEK), polyether ketone ketone (PEKK), or the like.

FIG. **3** also shows that each of the stabilizers **204** can include a bore **208** configured to receive a fastener **210** at least partially therein. The fastener **210** can extend at least partially into the bar bore **206***b* and the bore **208** to secure the stabilizers **204***b* to the pectus bar **202***a*. The bore **208** can be threaded to connect the fastener **210** to the bore **208** and therefore to the pectus bar **202** and the stabilizer **204**. Any of the stabilizers **204** can include such a bore and can be securable to their respective bar bore **206** in a similar way. Further details of the stabilizers **204** are discussed below with respect to FIG. **3**A.

FIG. **3**A illustrates an isometric view of a portion of the pectus bar assembly **200**. The pectus bar assembly **200** of FIG. **3**A can be consistent with the pectus bar assembly **200** of FIGS. **2**-**3** discussed above. FIG. **3**A shows additional details of the pectus bar assembly **200**. For example, FIG. **3**A shows that the stabilizer **204***b* can include a base **212** and a receiver **214** connected to the base **212**. The receiver **214** can define an opening **216** configured to receive an end portion **218** of the pectus bar **202***a* at least partially therein, such as to align the bar bore **206***b* with the bore **208** of the stabilizers **204***b*. The receiver **214** can also include a slot **220**. The slot **220** can be configured (e.g., sized or shaped) to allow the fastener **210** and the end portion **218** to be inserted into the receiver **214** when the fastener **210** is connected to the end portion **218** via the bore **206***b*, which can help to simplify the procedure.

The stabilizer **204***b* can also include a boss **222** that can extend from a surface of the base **212**. The boss **222** define bores **224***a* and **224***b* that can be configured (e.g., threaded) to receive fasteners therein, as discussed below. As also discussed below, the boss **222** can be configured (e.g., sized or shaped) to be insertable into a bracket. Though the stabilizer **204***b* is discussed with respect to FIG. **3**A, any of the stabilizers can include the components of the stabilizer **204***b*.

FIG. **4** illustrates an isometric view of the pectus bar assembly **200** in a first spacing configuration. FIG. **5** illustrates an isometric view of the pectus bar **200** assembly in a second spacing configuration. FIGS. **4** and **5** are discussed together below. The pectus bar assembly **200** of FIGS. **4**-**5** can be consistent with the pectus bar assembly **200** of FIGS. **2**-**3**A discussed above. FIGS. **4**-**5** shows additional details of the stabilizers **204**. Also, FIG. **4** shows the pectus bar assembly **200** adjusted to a spacing between the pectus bar **202***a* and the pectus bar **202***b* where one rib (e.g., one of the ribs **52**) can be between the pectus bar **202***a* and the pectus bar **202***b* and FIG. **5** shows the pectus bar assembly **200** adjusted to a spacing between the pectus bar **202***a* and the pectus bar **202***b* where two ribs can be between the pectus bar **202***a* and the pectus bar **202***b*. FIGS. **4**-**5** also show additional components of the pectus bar assembly **200**.

For example, FIGS. **4** and **5** show that the pectus bar assembly **200** can include a bridge **226***a* and a bridge **226***b* (collectively referred to as bridges **226**). Each of the bridges **226** can include a body **228** defining a slot **230**. The body **228** can include end portions **232** that can be tapered (or beveled or rounded), such as to help reduce palpability of the bridges following installation thereof. Each of the bridges **226** can be a rigid or semi-rigid component constructed of materials such as metals and plastics. For example, the bridges **226** can be constructed of biocompatible such as one or more of stainless steel alloys, cobalt-chromium, titanium, titanium alloys, polyether ether ketone (PEEK), polyether ketone ketone (PEKK), or the like.

The bridge **226***b* can be connectable to the stabilizers **204***b* and **204***d* to allow the stabilizer **204***b* and the first pectus bar **202***a* to translate along the bridge, and to allow the stabilizer **204***d* and the second pectus bar **202***b* to translate, independently of the first pectus bar **202***a*, along the bridge **226***b*. The bridge **226***a* can operate similarly to allow for independent adjustment or translation of the pectus bar **202***a* and the pectus bar **202***b*. The translation provided by the stabilizers of the pectus bars **202** is not limited or discrete. This can allow a surgeon to place the bars as desired or required by a procedure, whereas, many devices in the prior art includes holes at discrete increments to space apart pectus bars, which can limit options for placement in the pectus bars and result in interference with ribs.

The pectus bar assembly **200** can also include fasteners **234***a* and **234***b* (collectively referred to as fasteners **226**). Each of the stabilizers **204** can receive fasteners **234***a* and **234***b* into bores **224***a* and **224***b*, respectively. The fasteners **234***a* and **234***b* can engage an outer surface **236** of the bridge **226***b* to secure the bridge **226***b* to the stabilizers **204***b*. The stabilizer **204***d* can be similarly connected to the bridge **226***b* and the stabilizers **204***a* and **204***c* can be similarly connected to the bridge **226***a*.

The slot **230** can be configured to receive at least a portion of the fasteners **234** therethrough to secure the stabilizer **204***b* to the bridge **226***b*. The slot **230** can also be configured to receive at least a portion of the boss **222** therein such that the boss **222** can be translatable within the slot **230** to enable translation of the stabilizer **204***b* along the bridge **226***b*. The boss **222** can be translatable within the slot **230** when the fasteners **234** are secured to the stabilizers **204***b* but not tightened against the outer surface **236** (or when the fasteners **234** are not secured to the stabilizers **204***b*), allowing for adjustment of the bars **202** during a procedure or allowing for connection of the stabilizers **204** to the bridges **226** at various locations.

For example, as shown in FIG. **4**, the pectus bar **202***a* and the pectus bar **202***b* can be spaced apart from each other such that one rib can be located in between the bars **202***a* and **202***b*. However, as shown in FIG. **5**, the stabilizers **204** can be connected to the bridges **226** such that two or more ribs can fit between the bars **202***a* and **202***b*. The stabilizers **204** can be translated between positions shown in FIGS. **4** and **5** when the stabilizers **204** are connected via the fasteners **234** and not tightened, as discussed above. When the fasteners **234***a* and **234***b* are secured to the bores **224***a* and **224***b*, respectively, and are tightened to engage the outer surface **236**, movement of the stabilizers **204***b* with respect to the bridge **226***b* can be limited. Also, engagement by the boss **222** with ends of the slot **230** can limit translation of the stabilizers **204***b* with respect to the bridge **226***b*.

FIG. **6** illustrates an isometric view of a portion of a pectus bar assembly **600**. FIG. **7** illustrates an isometric view of the pectus bar assembly **600** in a first configuration. FIG. **8** illustrates an isometric view of the pectus bar assembly **600** in a second configuration. FIGS. **6-8** are discussed together below. The pectus bar assembly **600** can be similar to the pectus bar assemblies discussed above. The pectus bar assembly **600** can include hardware for adjusting the bars vertically or the bridges horizontally. Any of the pectus bar assemblies discussed above or below can be modified to include the features of the pectus bar assembly **600**.

The pectus bar assembly **600** can include pectus bars **602***a* and **602***b*, which can be similar to the bars **202***a* and **202***b*, discussed above. The pectus bar assembly **600** can also include stabilizers **604***a*-**604***d*. The stabilizers **604***a* and **604***b* can be configured to connect to the pectus bar **602***a* and the stabilizers **604**C and **604**D can be configured to connect to the pectus bar **602***b*.

Each of the stabilizers **604** can include a base **638**, as shown most clearly in FIG. **6**. Each base **638** can include bores **640***a* and **640***b* that can be configured to receive fasteners **634***a* and **634***b*, respectively, at least partially therein, as shown in FIGS. **7-8**. For example, the bores **640***a* and **640***b* can be threaded to receive screws or bolts. The base **638** can be configured to engage a first side (or back side or posterior side) **637** of the bridge **626**. The base can also be insertable into a recess **642** of the bridge **626**, which can at least partially surround a slot **630** of the bridge **626**.

Each of the stabilizers **604** can also include a plate **644**, as shown most clearly in FIG. **6**. The plate **644** can engage a second side **636** (or front side or anterior side) of the bridge **626** and can connect to the plate **644**, such as through a snap interface. A portion of the base **638** or a portion of the plate **644** can extend at least partially through the slot **630** to secure the base **638** and the plate **644** to the bridge **626**. When the base **638** and the plate **644** are connected to the bridge **626**, the base **638** and the plate **644** can be translatable along the slot **630**. The plate **644** can also include bores **646***a* and **646***b* that can be aligned with the bores **640***a* and **640***b* of the base **638** when the base **638** is connected to the plate **644**. As shown in FIG. **6**, the plate **644** can engage a first side of the pectus bar **602***a*.

As shown in FIGS. **7** and **8**, each of the stabilizers **604** can include a cap **648**. The cap **648** can be engageable with the pectus bar **602***a* and can be securable to the plate **644**. The cap **648** can include bores **650***a* and **650***b* configured to receive fasteners **634***a* and **634***b* at least partially therein or therethrough. For example, at least a portion of the fasteners **634***a* and **634***b* can extend through bores **650***a* and **650***b* of the cap **648**, respectively, and through bores **646***a* and **646***b* of the plate **644**, respectively, and into the bores **640***a* and **640***b* of the base **638**, respectively, to secure the cap **648**, the plate **644**, and the base **638** to each other.

When the fasteners **634***a* and **634***b* are secured to the cap **648**, the plate **644**, and the base **638**, but not tightened, the cap **648**, the plate **644**, the base **638**, and the pectus bar **602***a* can be translatable along the bridge **626***b*. For example, as shown in FIG. **7**, the pectus bar **602***a* and the pectus bar **602***b* can be spaced apart from each other such that one rib can be located in between the bars **602***a* and **602***b*. As shown in FIG. **8**, the stabilizers **604** can be translated along the bridges **626***a* and **626***b* such that two or more ribs can fit between the bars **602***a* and **602***b*. That is, the stabilizers **604** can be translated between the positions shown in FIGS. **7** and **8** when the cap **648**, the base **638**, and the plate **644** are connected and the fasteners **634** are not tightened.

Also, when the fasteners **634***a* and **634***b* are secured to the cap **648**, the plate **644**, and the base **638**, but the fasteners **634***a* and **634***b* are not tightened, the cap **648**, the plate **644**, the base **638**, and the bridge **626***b* can be translatable along the pectus bar **602***a*. And, the bridges **626** and stabilizers **604** can be translated along the bars **602** when the fasteners **634** are connected to the cap **648** and the base **638** but are not tightened. When the fasteners **634***a* and **634***b* are tightened to the cap **648**, the plate **644**, and the base **638**, translation of the stabilizers **604** (and the bars **602**) with respect to the bridges **626** can be limited or prevented and translation of the stabilizers **204** and the bridges **626** with respect to the bars **602** can be limited or prevented. In this way, the assembly **600** can allow for intraoperative adjustment of the hardware as necessary to fit an individual patient.

FIG. **9** illustrates an isometric view of a pectus bar assembly **900**. The pectus bar assembly **900** can be similar to the pectus bar assemblies discussed above. The pectus bar assembly **900** can include hardware for quickly securing the pectus bars to each other. Any of the pectus bar assemblies discussed above or below can be modified to include the features of the pectus bar assembly **900**.

The pectus bar assembly **900** can include a pectus bar **902***a* and a pectus bar **902***b*, which can be similar to the pectus bars discussed above. The pectus bar assembly **900** can also include a stabilizer assembly **952***a* and a stabilizer assembly **952***b*. Each of the stabilizer assemblies can include a first bracket **954** and a second bracket **956**. The first brackets **954** can be connected to the pectus bar **902***a* and the second brackets **956** can be connected to the pectus bar **902***b*. Optionally, one of the first brackets **954** and one of the second brackets **956** can be connected to the pectus bar **902***a* and one of the first brackets **954** and one of the second brackets **956** can be connected to the pectus bar **902***b*. That is one of the stabilizer assemblies **952** can be connected to the bars **902** in a configuration opposite the other.

Each of the first brackets **954** and the second brackets **956** can be a rigid or semi-rigid components constructed of materials such as metals and plastics. For example, the first brackets **954** and the second brackets **956** can be constructed

of biocompatible such as one or more of stainless steel alloys, cobalt-chromium, titanium, titanium alloys, polyether ether ketone (PEEK), polyether ketone ketone (PEKK), or the like.

FIG. **10** illustrates an enlarged isometric view of a portion of the pectus bar assembly **900**. The pectus bar assembly **900** of FIG. **10** can be consistent with the pectus bar assembly **900** of FIG. **9**; FIG. **10** shows additional details of the pectus bar assembly **900**. For example, FIG. **10** shows that the first bracket **954** can include a bar slot **958**, which can be a recess, opening, or bore extending at least partially into a body **960** of the first bracket **954**. The bar slot **958** can extend entirely through the body **960** such as to allow the pectus bar **902***a* to pass through the first bracket **954**. Optionally, the bar slot **958** can extend only partially into the body **960**, such as to limit movement of the pectus bar **902***a* with respect to the first bracket **954**.

Similarly, the second brackets **956** can include a bar slot **964**, which can be a recess, opening, or bore extending at least partially into a body **962** of the second bracket **956**. The bar slot **964** can extend entirely through the body **962** such as to allow the pectus bar **902***b* to pass through the second bracket **956**. Optionally, the bar slot **964** can extend only partially into the body **962**, such as to limit movement of the pectus bar **902***b* with respect to the second bracket **956**.

The first bracket **954** can also include a receiver **966** defining a slot **968** extending at least partially into the body **960**. The slot **968** can terminate within the body **960** prior to interesting the bar slot **958**. The slot **968** can be orthogonal to the bar slot **958** or can be in an orientation not parallel to the bar slot **958**. The first bracket **954** can also include a pawl **970** connected to the receiver **966**. The pawl **970** can include one or more projections extending at least partially into the slot **968**. The pawl **970** can be configured to reversibly deflect. The pawl **970** can be integrally formed into the body **960**, such as via a living hinge. Optionally, the pawl **970** can be connected to the body **960**.

The second bracket **956** can include a projection **974** extending from a body **972** of the second bracket **956**. The projection **974** can be insertable into the receiver **966** to connect the first bracket **954** to the second bracket **954** and to secure the first pectus bar **902***a* to the second pectus bar **902***b*. The projection **974** and the receiver **966** can together form a ratcheting interface to secure the first bracket **954** to the second bracket **956**. For example, the projection **974** can include a plurality of teeth **976**, which can be engageable with the pawl **970** when the projection **974** is inserted into the receiver **966**. The pawl **970** can engage the teeth **976** and deflect when the projection **974** moves into the receiver and the pawl **970** can engage and retain one or more of the teeth **976** to limit movement of the projection **974** out of the receiver **966**. In this way, the receiver **966** and the projection **974** can be relatively quickly and securely connected to secure the pectus bar **902***a* to the pectus bar **902***b*.

Also, optionally, the projection **974** can be engageable with the slot **968** to limit translation of the projection **974** into the slot. For example, the projection **974** can be measured and cut to a desired length prior to insertion such that engagement between the projection **974** and the slot **968** can be used to position the bars pectus bar **902***a* and pectus bar **902***b* with respect to each other.

Optionally, the pectus bar assembly **900** can include one or more fasteners, such as a fastener **910**, which can be threadably securable to a bore of the second bracket **956** and can be insertable through a bore of the pectus bar **902***b*, such as to limit translation of the pectus bar **902***b* with respect to the second bracket **956**. The first bracket **954** can optionally be similarly configured.

FIG. **11** illustrates a schematic view of the method **1100**, in accordance with at least one example of this disclosure. The method **1100** can be a method of installing a pectus bar. More specific examples of the method **1100** are discussed below. The steps or operations of the method **1100** are illustrated in a particular order for convenience and clarity; many of the discussed operations can be performed in a different sequence or in parallel without materially impacting other operations. The method **500** as discussed includes operations performed by multiple different actors, devices, and/or systems. It is understood that subsets of the operations discussed in the method **500** can be attributable to a single actor, device, or system could be considered a separate standalone process or method.

The method can begin at step **1102**, which can be inserting a first pectus bar and a second pectus bar into a thoracic cavity, such as the pectus bar **202***a* and the pectus bar **202***b*. At step **1104**, a first bracket can be connected to the first pectus bar and a second bracket can be connected to the second pectus bar. For example, the stabilizer **204***b* can be connected to the pectus bar **202***a* and the stabilizer **204***d* can be connected to the stabilizers **204***b*.

At step **1106**, a bridge can be connected to the first bracket and the second bracket. For example, the bridge **226***b* can be connected to the stabilizers **204***b* and **204***d*. At step **1108**, the first and second bracket can be adjusted with respect to the bridge. For example, the stabilizers **204***b* or **204***d* can be translated along the bridge **226***b*. At step **1110**, the pectus bars can be adjusted with respect to the bridges. For example, the pectus bar **602***a* and the pectus bar **602***b* can be adjusted with respect to the stabilizers **604***a*-**604***d* by translating the stabilizers (and the bridges **626**) along the pectus bars **602**. At step **1114**, the brackets can be fastened. For example, the stabilizers **204** can be fastened or otherwise secured to the bridges **226**, such as to secure the pectus bars **202** to the bridges **226**. Additional steps discussed above with respect to FIGS. **2-10** can be incorporated into the method **1100**.

FIG. **12** illustrates an isometric view of a portion of a pectus bar assembly **1200**. The pectus bar assembly **1200** can be similar to the pectus bar assemblies discussed above or below. The pectus bar assembly **1200** can include bar links securable to pectus bars and securable to a bridge to help stabilize the assembly following implantation.

The pectus bar assembly **1200** can include a first pectus bar **1202***a* and a second pectus bar **1202***b* (both shown in FIG. **18**) and a first bar link **1204***a* and a second bar link **1204***b*. The pectus bar assembly **1200** can also include a bridge **1226**. Though the pectus bar assembly **1200** is discussed as including two pectus bars and two bar links, the pectus bar assembly **1200** can include 1, 2, 3, 4, 5, 6, or the like pectus bars, and can include 1, 2, 3, 4, 5, 6, or the like bar links (or stabilizers or brackets).

The pectus bars **1202** can be similar to the pectus bars discussed above (e.g., the **202**) in that the pectus bars **1202** can be a rigid or semi-rigid bar constructed of one or more biocompatible materials such as metals and plastics. For example, the pectus bars **1202** can be constructed of biocompatible materials such as one or more of stainless-steel alloys, cobalt-chromium, titanium, titanium alloys, polyether ether ketone (PEEK), polyether ketone ketone (PEKK), or the like. The pectus bars **1202** can have an elongate body forming a curve, such as a c-shape, and can

be rigid (or semi-rigid) but flexible enough to be bent to match a curvature of a patient's ribcage using tools, such as a bar bender.

The bar links **1204***a* and **1204***b* can each be connectable to portions of the pectus bars **1202***a* and **1202***b*, respectively, and the bar links **1204***a* and **1204***b* can be translatable along the pectus bars **1202***a* and **1202***b*, respectively, as discussed in further detail below. Each of the bar links **1204***a* and **1204***b* can be a rigid or semi-rigid component constructed of materials such as metals and plastics. For example, the bar links **1204***a* and **1204***b* can be constructed of biocompatible such as one or more of stainless-steel alloys, cobalt-chromium, titanium, titanium alloys, polyether ether ketone (PEEK), polyether ketone ketone (PEKK), or the like. The bar links **1204***a* and **1204***b* can be the same configuration but rotated; in other examples the bar links **1204***a* and **1204***b* can be mirror copies of each other.

The bridges **1226** can be connected to the pectus bars **1202** by the bar links **1204** such as to reinforce the pectus bars **1202** as an assembly. Each of the bridges **226** can be a rigid or semi-rigid component constructed of materials such as metals and plastics. For example, the bridges **226** can be constructed of biocompatible such as one or more of stainless steel alloys, cobalt-chromium, titanium, titanium alloys, polyether ether ketone (PEEK), polyether ketone ketone (PEKK), or the like. The bridges can be cylindrical in shape but can have other shapes such as a rectangular prism, hexagonal prism, octagonal prism, or the like.

Each of the bar links **1204** can include a body **1228** and an arm **1229** connected to the body **1228**. The body **1228** and the arm **1229** can together form a slot **1230** to receive the bridge **1226** at least partially therein or therethrough. The arm **1229** can be connected to the body **1228** by a living hinge **1231** and the arm **1229** and the body **1228** can together form a clamp biased to an open position by the living hinge **1231**. The living hinge **1231** can be integral to the body **1228** and the arm **1229**, and the living hinge **1231** can at least partially form the slot **1230**. The living hinge **1231** can be configured to elastically deform, flex, or move to enable relative movement of the arm **1229** with respect to the body **1228** which can cause a change in size of the slot **1230**.

The bar links **1204** can also include an arm actuator **1232** that can be connected to the body **1228** and to the arm **1229**. The arm actuator **1232** can extend through the arm **1229** and can threadably engage a bore **1240** (shown in FIG. **13**) of the body **1228**, where the bore **1240** can be threaded. The arm actuator **1232** can be a set screw, cam, screw, bolt, fastener or the like that can be operable to move between a first position where the bridge **1226** is movable with respect to the body **1228** and a second position where the arm **1229** and the body **1228** engage the bridge **1226** to clamp the bridge **1226** to secure the bar links **1204** to the bridge **1226**. Because the arm **1229** is connected to the body **1228** by the living hinge **1231**, when the arm actuator **1232** causes the arm **1229** to move, the living hinge **1231** can allow the arm **1229** to elastically deflect with respect to the body **1228**. The arm **1229** can also be biased by the living hinge **1231** to an open or partially open position. Each of the bar links **1204** can also include an actuator **1234** that can be connected to the body **1228** and can be operable to secure the bar links **1204** to pectus bars, as discussed in further detail below.

When the arm **1229** (e.g., of the bar link **1204***a*) is in the open or unlocked position, the bar link **1204***a* can be translatable or movable along an axis A of the bridge **1226**. The bar link **1204***a* can also be rotatable about the bridge **1226** (e.g., about the axis A of the bridge **1226**). The bar links **1204** be independently adjustable along the bridge **1226** and around the bridge **1226**. Optionally, if the bar links **1204** are fixed to the pectus bars, the bridge **1226** can be adjusted relative to the bar links **1204**. The translation and rotation provided by the bar links **1204** is not limited or discrete. This can allow a surgeon to place the bars as desired or required by a procedure, whereas many devices in the prior art include holes at discrete increments to space apart pectus bars, which can limit options for placement in the pectus bars and can result in interference with ribs.

FIG. **12** also shows that the bar links **1204** can each include a head **1278** that can be connected to the body **1228**. The head **1278** can be used by a physician to position the bar links **1204** with respect to anatomy, the pectus bars **1202**, or the bridge **1226**. The head **1278** can also include a rib **1280** that can be configured to be grasped by an instrument, such as a needle holder or forceps, to maneuver or position the bar links **1204**, which can be helpful for positioning with respect to the bridge **1226** when the bridge **1226** is a cylindrical rod, as shown in FIG. **12**. The head **1278** can also be used to at least partially deform the body **1228** for extraction or explantation of one or more components of the pectus bar assembly **1200**, as discussed in further detail below. The head **1278** can be lower than (e.g., posterior of) the arm **1229** to help limit or reduce palpability of the head **1278**.

FIG. **14** illustrates a side view of a portion of the pectus bar assembly **1200**. FIG. **15** illustrates a side view of a portion of the pectus bar assembly **1200**. FIG. **16** illustrates a side view of a portion of the pectus bar assembly **1200**. FIG. **17** illustrates a side view of a portion of the pectus bar assembly **1200**. FIGS. **14-17** are discussed together below. The pectus bar assembly **1200** of FIGS. **14-17** can be consistent with FIGS. **12** and **13** above; FIGS. **14-17** show additional details of the pectus bar assembly **1200**. For example, FIGS. **14-17** show the pectus bars **1202***a* and **1202***b* and how the bar links **1204***a* and **1204***b* can connect to the first pectus bars **1202***a* and **1202***b*, respectively.

FIGS. **14-17** also show additional details of the bar links **1204**. For example, FIGS. **14-17** show that each of the bodies **1228** of the bar links **1204** can include or can define an opening **1282** that can be configured to receive at least a portion of the pectus bar **1202** therein. The opening **1282** can be at least partially defined by a shelf **1284** of the body. The shelf **1284** can be shaped to conform to either end portion **1203***a* or **1203***b* of the first pectus bar **1202***a* or the second pectus bar **1202***b*. That is, the shelf **1284** can receive, for example, the end portion **1203***a* at least partially therein when the first pectus bar **1202***a* is inserted into the opening **1282**, as shown in FIGS. **14-17**. The shelf **1284** and the actuator **1234** can be together shaped and sized to allow the bar links **1204** to be placed onto the pectus bars **1202** from above (or anteriorly).

FIGS. **14-17** shows further details of the bore **1240** of the arm actuator **1232**, which can extend at least partially through the body **1228**. Also, the arm **1229** can include an actuator bore **1241** that can extend at least partially through the arm **1229** and can be aligned (e.g., coaxial with) the bore **1240**. An upper portion of the actuator bore **1241** can be tapered or otherwise angled to be complementary to an underside of a head of the arm actuator **1232** such that the arm actuator **1232** cannot pass through the arm **1229** towards the body **1228**. The body **1228** can include a swage of the bore **1240** in the body **1228** that can be configured, together with the head and the actuator bore **1241**, to help captivate or capture the arm actuator **1232**. Optionally, the bore **1240** can be threaded to engage with a threaded portion of the arm actuator **1232** such that when the arm actuator **1232** is rotated (e.g., clockwise), the arm actuator **1232**

moves into the body **1228**, bringing the arm **1229** closer to the body **1228**, closing the slot **1230** and clamping down onto the bridge **1226** to limit rotation of the bar link **1204***a* with respect to the bridge **1226** and limiting translation of the bar link **1204***a* along the bridge **1226**. The bar link **1204***b* can be similarly configured or operated.

FIGS. **14-17** also show an actuator **1234** located at least partially within a bore **1246** of the body **1228** of each of the bar links **1204**. The actuator **1234** can be a set screw, cam, screw, bolt, fastener or the like that can be operable to move between a first position (shown in FIGS. **14** and **15**) where the pectus bar(s) **1202** are movable with respect to the body **1228** and between a second position where the actuator **1234** engage the pectus bar(s) **1202** to clamp the bar links **1204** to the pectus bar(s) **1202**. As shown in FIGS. **14** and **15**, the actuator **1234** can be in a fully retracted position, which can allow, for example, the pectus bar **1202***a* to be inserted into the opening **1282** of the bar link **1204***a*. The actuator **1234** can be translated relative to the body **1228** by rotating the actuator **1234** with respect to the body **1228**, such as with a cam, screw, or bolt.

The actuator **1234** can be limited or prevented from moving beyond the retracted position by a stop, swage, or the like of the actuator **1234**, which can be configured to help capture or captivate the actuator **1234** at least partially within the bore **1246**. During assembly, the actuator **1234** can be threaded into the bore **1246** from the opening **1282**. Following insertion, the actuator **1234** can be swaged near its proximal side (or anterior side, such as away from the opening **1282**). Similarly, the actuator **1234** can be limited or prevented from moving beyond the extended position by a stop, such as a thread run-out at a distal portion of the actuator **1234** or other stop of the bore **1246** or the actuator **1234**.

As shown in FIGS. **16** and **17**, the actuators **1234** can be operated (e.g., rotated through a threaded portion of the bore **1246**) to engage a second end portion **1203***b* of the pectus bars **1202** to cause the first end portion **1203***a* to engage the shelf **1284** opposite the actuator **1234**, thereby securing the bar links **1204** to the pectus bars **1202**. Such engagement can be reversed by reversing (e.g., rotating in a counter-clockwise direction) the actuator **1234** to release the bar links **1204** from the pectus bars **1202**.

As shown in FIG. **17**, the actuator **1234** can be shaped such that it has a flat distal tip **1286** connected to a curved, arced, or radiused portion **1288** that is connected to a body **1290**, which can be a threaded portion (e.g., threaded portion **1290**). The radiused portion **1288** can be configured to engage a curved surface or portion of the second end portion **1203***b*. The arc or radius of curvature of the radiused portion **1288** can be complementary (e.g., shaped to receive or conform to) the end portion **1203***b*. The radius of curvature of the radiused portion **1288** can be between 0.5 millimeters (mm) and 2.5 mm, such as between 1 mm and 2 mm. For example, the radius of curvature can be 1.1 mm, 1.2 mm, 1.3 mm, 1.4 mm, 1.5 mm, 1.6 mm, 1.7 mm, 1.8 mm, 1.9 mm, or the like. Also, the distal tip **1286** can have a diameter of between 0.5 mm and 2.5 mm, such as between 1 mm and 2 mm. For example, the diameter of the distal tip **1286** can be 1.1 mm, 1.2 mm, 1.3 mm, 1.4 mm, 1.5 mm, 1.6 mm, 1.7 mm, 1.8 mm, 1.9 mm, or the like. In one example, the distal tip can be about 1.6 mm and the radius of curvature can be about 1.65 mm.

The flat distal tip **1286** and the radiused portion **1288** can also together be shaped such that the flat distal tip **1286** does not engage the end portion **1203***b* as the actuator **1234** extends from its retracted position to the extended position when the pectus bar **1202***a* is in the opening **1282**, which could result in a force applied to the pectus bar **1202***b* that forces the pectus bar **1202***b* out of the opening **1282**. Instead, the flat distal tip **1286** and the radiused portion **1288** can be shaped such that as the actuator **1234** extends into the opening **1282**, the flat distal tip **1286** does not engage the second pectus bar **1202***b* and only the radiused portion **1288** engages the end portion **1203***b* to apply a force towards the body **1228** or the shelf **1284**, helping to simplify installation of the pectus bar assembly **1200**.

FIGS. **14-17** also show that the head **1278** can extend from the body **1228** away from the actuator **1234** and the head **1278** can be connected to a body **1228** on the same side as the shelf **1284**. The body **1228** can also include a recess **1292** (shown in FIG. **16**) that can create a relatively thin portion of the body **1228** between the recess **1292** and the shelf **1284**, which can be used as discussed in FIG. **18** below.

FIG. **18** illustrates an isometric view of the pectus bar assembly **1200**. The pectus bar assembly **1200** of FIG. **18** can be consistent with FIGS. **12-17** discussed above. FIG. **18** shows how the head **1278** can be used. For example, during an extraction, removal or explantation of one or more components of the pectus bar assembly **1200**, it may be required to remove the bar link **1204***b* from the second pectus bar **1202***b*, which can require that the actuator **1234** be actuated to disengage the second pectus bar **1202***b*. However, tissue or bone can grow over or into the recess of the actuator **1234** that is configured to receive a tool or instrument, such as a hexolubular interface, hexagonal interface, cross-recess interface, or the like. In such a situation, it may be difficult to insert the instrument into the interface or can be time consuming to clear debris. When this occurs, the head **1278** can be inserted into an opening **56** of a bender **54** and the bender **54** can be operated to deform the body **1228** such that the body **1228** bends about the recess **1292** (shown in FIG. **16**) and the opening **1282** increases in size to allow the bar links **1204***b* to be removed from the second pectus bar **1202***b* without operating the actuator **1234**. The head **1278** of the bar links **1204***a* can be similarly manipulated to free the bar links **1204***a* from the first pectus bar **1202***a* allowing for explantation of the pectus bar assembly **1200** without actuation of the actuator **1234**.

FIG. **19** illustrates an isometric view of a portion of the pectus bar assembly **1200**. The pectus bar assembly **1200** of FIG. **19** can be consistent with FIGS. **12-18** discussed above. FIG. **19** shows other ways that the head **1278** can be used. For example, during installation or during extraction, it may be desired to manipulate or position the bar link **1204***a* with respect to the first pectus bar **1202***a*, the bridge **1226**, or anatomy. In such a case, a grasping instrument **58** (e.g., an instrument including jaws, such as a needle holder or forceps) can be used to grasp the rib **1280** allowing a physician or surgeon to position the bar links **1204***a* easily using the instrument **58**, such as along the bridge **1226** or around the bridge **1226**.

FIG. **20** illustrates a cross-sectional view of a portion of the pectus bar assembly **1200**. The pectus bar assembly **1200** of FIG. **20** can be consistent with FIGS. **12-19** discussed above. FIG. **20** shows how the bridge **1226** can interact with the slot **1230**. More specifically, the slot **1230** can include a primary bore **1294** and angled portions **1295** where the primary bore **1294** can define a diameter D1 and the tapered portions can define a diameter D2 that is larger than the diameter D1. The angled portions **1295** can be tapered or angled and can extend from the primary bore **1294**, which can be near a center of the slot **1230**, towards respective ends of the slot **1230**.

The bridge **1226** can include a shaft **1296** having a diameter D4 along a length of the shaft **1296**, which can be a majority of a length of the bridge **1226**. The bridge **1226** can also include a flared or enlarged portion **1297** located at an end of a shaft **1296**. The bridge **1226** can include an enlarged portion at each of its ends. The enlarged portion **1297** can have or define a diameter D5 that is larger than a diameter D4 of the shaft **1296**. This enlarged diameter can be slightly larger than the diameter D1 such that when the bridge **1226** moves through the slot **1230**, there is some resistance to insertion or removal of the bridge **1226** into or from the slot **1230**.

Also, because the diameters D2 can be larger than the diameter D4 of the shaft **1296** and because the diameter D1 can be only slightly larger than the diameter D4 of the shaft **1296**, the bar links **1204** can be configured to tilt in multiple directions with respect to the longitudinal axis A of bridge **1226** even following insertion of the bridge **1226** into the slot **1230**, when the arm actuator **1232** is in an unlocked configuration, which can allow the bar links **1204** to be placed at various angles with respect to the bar link **1204***a*.

When two pectus bars are used to correct a deformity, such as pectus excavatum, the bars (e.g., **1202**) often do not perfectly align with each other (or are not parallel). The bars also may not be in the same plane and can be tilted or rotated with respect to each other. The features above allow the bar links **1204** to adapt to the misalignment between the two bars **1202**. Also, these features (and optionally bending of the bridge **1226**) can allow the bar links **1204** to be used with pectus bars installed in a crossing or X-configuration, or in other non-parallel configurations. When the bridge **1226** and bar link **1204***a* are in their desired positions, the arm actuator **1232** can be used to fix the orientation of the bridge **1226** with respect to the bar link **1204***a*.

This adjustability to tilt the bar links **1204** with respect to the bridge **1226** along with the bar links **1204** be adjustable along the pectus bars **1202**, the bar links **1204** be adjustable along the bridge **1226**, and the bar links **1204** be rotatable about the bridge **1226** allows for positioning or adjustability of the pectus bar assembly **1200** in every direction to allow for the pectus bar assembly **1200** to be installed in patient anatomy of a variety of shapes and sizes.

FIG. **21** illustrates an isometric view of a portion of a pectus bar assembly **2100**. FIG. **22** illustrates an isometric view of a portion of a pectus bar assembly **2200**. FIG. **23** illustrates an isometric view of a portion of a pectus bar assembly **2300**. FIGS. **21-23** are discussed together below. The pectus bar assembly **2100**, the pectus bar assembly **2200**, and the pectus bar assembly **2300**, can be similar to the pectus bar assembly **1200** discussed above. FIGS. **21-23** show different ways that the assemblies can be used.

As shown in FIG. **21**, the pectus bar assembly **2100** can include two pectus bars **2102***a* and **2102***b*, two stabilizers **2104***a* and **2104***b*, and a single bridge **2226**. As shown in FIG. **22**, the pectus bar assembly **2200** can include three pectus bars, **2102***a* and **2102***b*, four stabilizers **2104***a*-**2104***d*, and two bridge **2226***a* and **2226***b*. In this configuration, the bar **2102***b* can receive two stabilizers, **2104***b* and **2104***c* to connect the bars **2102***a* and **2102***c*. As shown in FIGS. **23**, the pectus bar assembly **2300** can include three pectus bars, **2102***a* and **2102***b*, but only three stabilizers **2104***a*-**2104***c*, and one bridge **2226**, allowing for less hardware to be used to interconnect three pectus bars. FIGS. **21-23** thereby show that the pectus bar assembly **2200** can be used in systems using one or more pectus bars, such as 1, 2, 3, 4, 5, or the like.

Notes and Examples

The following, non-limiting examples, detail certain aspects of the present subject matter to solve the challenges and provide the benefits discussed herein, among others.

Example 1 is a pectus bar assembly comprising: a first pectus bar and a second pectus bar engageable with a sternum; a first bracket connectable to the first pectus bar; a second bracket connectable to the second pectus bar; and a bridge connectable to the first bracket and the second bracket to allow the first bracket and the first pectus bar to translate along the bridge, and to allow the second bracket and the second pectus bar to translate, independently of the first pectus bar, along the bridge.

In Example 2, the subject matter of Example 1 optionally includes the first bracket comprising: a base; and a receiver connected to the base, the receiver configured to receive an end portion of the first pectus bar therein.

In Example 3, the subject matter of Example 2 optionally includes wherein the first bracket includes a boss extending from a surface of the base, and wherein the bridge includes a slot configured to receive at least a portion of the boss therein.

In Example 4, the subject matter of Example 3 optionally includes wherein the boss is translatable within the slot to enable translation of the first bracket along the bridge.

In Example 5, the subject matter of Example 4 optionally includes a first fastener securable to the boss and engageable with the bridge to secure the first bracket to the bridge and to limit translation of the first bracket along the bridge.

In Example 6, the subject matter of Example 5 optionally includes the second bracket comprising: a base; and a receiver connected to the base, the receiver configured to receive an end portion of the second pectus bar therein.

In Example 7, the subject matter of Example 6 optionally includes wherein the second bracket includes a boss extending from a surface of the base, the boss translatable within the slot of the bridge to enable translation of the second bracket with respect to the bridge.

In Example 8, the subject matter of Example 7 optionally includes a second fastener securable to the boss of the second bracket and engageable with the bridge to secure the second bracket to the bridge and limit translation of the second bracket with respect to the bridge.

In Example 9, the subject matter of any one or more of Examples 1-8 optionally include the first bracket comprising: a base engageable with a first side of the bridge; and a plate securable to the base and engageable with a second side of the bridge, opposite the first side, the plate engageable with the first pectus bar, and the base and the plate together translatable along the bridge.

In Example 10, the subject matter of Example 9 optionally includes the first bracket comprising: a cap engageable with the first pectus bar and securable to the plate, wherein the cap, the plate, the base, and the bridge are together translatable along the first pectus bar.

In Example 11, the subject matter of Example 10 optionally includes the first bracket comprising: a fastener securable to the cap and the base to secure the first bracket to the first pectus bar and to limit translation of the cap, the plate, the base, and the bridge along the first pectus bar, and the fastener securable to the plate to limit translation of the base and the plate along the bridge.

In Example 12, the subject matter of Example 11 optionally includes the second bracket comprising: a base engageable with the first side of the bridge and engageable with the second pectus bar; a plate securable to the base and engageable with a second side of the bridge, opposite the first side, the base and the plate together translatable along the bridge;

a cap engageable with the second pectus bar and securable to the plate, wherein the cap, the plate, the base, and the bridge are together translatable along the second pectus bar; and a fastener securable to the cap and the base to secure the second bracket to the second pectus bar and to limit translation of the cap, the plate, the base, and the bridge along the second pectus bar, and the fastener securable to the plate to limit translation of the base and the plate along the bridge.

Example 13 is a pectus bar assembly comprising: a first pectus bar and a second pectus bar engageable with a sternum; a first bracket connectable to the first pectus bar and defining a receiver; and a second bracket connectable to the second pectus bar and including a projection, the projection insertable into the receiver to connect the first bracket to the second bracket and to secure the first pectus bar to the second pectus bar.

In Example 14, the subject matter of Example 13 optionally includes wherein the projection and the receiver together form a ratcheting interface to secure the first bracket to the second bracket.

In Example 15, the subject matter of any one or more of Examples 13-14 optionally include wherein the first bracket includes a pawl connected to the receiver, and wherein the projection includes a plurality of teeth, the plurality of teeth engageable with the pawl when the projection is inserted into the receiver to allow movement of the projection into the receiver and to limit movement of the projection out of the receiver.

In Example 16, the subject matter of any one or more of Examples 13-15 optionally include wherein the first bracket is translatable along the first pectus bar and wherein the second bracket is translatable along the second pectus bar.

In Example 17, the subject matter of Example 16 optionally includes a fastener securable to the first pectus bar and the first bracket to limit translation of the first bracket along the first pectus bar.

In Example 18, the subject matter of any one or more of Examples 13-17 optionally include wherein the projection is engageable with the receiver to limit movement of the second bracket and the second pectus bar toward the first bracket and the first pectus bar.

Example 19 is a method of installing a pectus bar assembly, the method comprising: inserting a first pectus bar and a second pectus bar into a sternum; connecting a first bracket to the first pectus bar; connecting a second bracket to the second pectus bar; connecting a bridge to the first bracket and the second bracket; translating the first bracket along the bridge; translating the second bracket along the bridge; fastening the first bracket to the bridge; and fastening the second bracket to the bridge.

In Example 20, the subject matter of Example 19 optionally includes fastening the first bracket to the first pectus bar; and fastening the second bracket to the second pectus bar.

In Example 21, the subject matter of any one or more of Examples 19-20 optionally include connecting a first cap to the first bracket; and translating the first bracket and the bridge along the first pectus bar.

In Example 22, the subject matter of Example 21 optionally includes connecting a second cap to the second bracket; and translating the second bracket and the bridge along the second pectus bar.

Example 23 is a pectus bar assembly comprising: a first pectus bar and a second pectus bar engageable with a sternum; a first bar link connectable to the first pectus bar and translatable along the first pectus bar; a second bar link connectable to the second pectus bar and translatable along the second pectus bar; and a bridge defining a longitudinal axis, the bridge connectable to the first bar link and the second bar link, the first bar link and the second bar link independently translatable along the bridge, and the first bar link and the second bar link independently rotatable about the longitudinal axis of the bridge.

In Example 24, the subject matter of Example 23 optionally includes the first bar link comprising: a body; and a shelf connected to the body, the shelf configured to receive a first end portion of the first pectus bar therein.

In Example 25, the subject matter of Example 24 optionally includes the first bar link comprising: an actuator extending through a bore of the body, the actuator operable between an unlocked position where the actuator is disengaged from the first pectus bar and a locked position where the actuator is engaged with a second end portion of the first pectus bar to cause engagement between the first end portion of the pectus bar and the shelf to secure the first bar link to the first pectus bar.

In Example 26, the subject matter of Example 25 optionally includes wherein the actuator is rotatable to cause the actuator to translate within the bore of the body.

In Example 27, the subject matter of Example 26 optionally includes wherein the actuator is captivated within the bore of the body.

In Example 28, the subject matter of any one or more of Examples 26-27 optionally include wherein a distal portion of the actuator is shaped to avoid engagement with an anterior portion of the first pectus bar when the actuator is moved from the unlocked position to the locked position.

In Example 29, the subject matter of any one or more of Examples 25-28 optionally include the first bar link comprising: a head extending away from the body and away from the actuator, the head movable to deform the body to release the first bar link from the first pectus bar.

In Example 30, the subject matter of Example 29 optionally includes wherein the head includes a rib graspable to manipulate the first bar link with respect to the bridge and the first pectus bar.

In Example 31, the subject matter of Example 30 optionally includes the first bar link comprising: an arm connected to the body, the arm and the body together defining a slot configured to receive the bridge at least partially therein; and an arm actuator connected to the body and the arm and operable to move between a first position where the bridge is movable with respect to the body and a second position where the arm and the body engage the bridge to secure the first bar link to the bridge.

In Example 32, the subject matter of Example 31 optionally includes wherein the arm and the body together form a clamp.

In Example 33, the subject matter of Example 32 optionally includes wherein the arm is connected to the body by a living hinge configured to allow the arm to elastically deflect with respect to the body when the arm moves between the first position and the second position.

In Example 34, the subject matter of Example 33 optionally includes wherein the slot is a bore including an angled portion at an opening of the bore configured to allow the first bar link to tilt with respect to the longitudinal axis of the bridge when the bridge is positioned in the slot of the first bar link and the arm actuator is in the first position.

In Example 35, the subject matter of any one or more of Examples 33-34 optionally include wherein the living hinge at least partially forms the slot.

In Example 36, the subject matter of any one or more of Examples 23-35 optionally include wherein the bridge is a cylindrical rod.

Example 37 is a pectus bar assembly comprising: a first pectus bar and a second pectus bar engageable with a sternum; a first bar link connectable to the first pectus bar and translatable along the first pectus bar; a second bar link connectable to the second pectus bar and translatable along the second pectus bar; and a rod extending along a longitudinal axis, the rod connectable to the first bar link and the second bar link, the first bar link and the second bar link independently translatable along the rod, and the first bar link and the second bar link independently rotatable about the longitudinal axis of the bridge.

In Example 38, the subject matter of Example 37 optionally includes the first bar link comprising: a body; and a shelf connected to the body, the shelf configured to receive a first end portion of the first pectus bar therein; and an actuator extending through a bore of the body, the actuator rotatable between an unlocked position where the actuator is disengaged from the first pectus bar and a locked position where the actuator is engaged with a second end portion of the first pectus bar to cause engagement between the first end portion of the pectus bar and the shelf to secure the first bar link to the first pectus bar.

In Example 39, the subject matter of Example 38 optionally includes wherein the actuator is captivated within the bore by the body.

In Example 40, the subject matter of any one or more of Examples 38-39 optionally include wherein a distal portion of the actuator is shaped to avoid engagement with an anterior portion of the first pectus bar when the actuator is moved from the unlocked position to the locked position.

In Example 41, the subject matter of any one or more of Examples 38-40 optionally include the first bar link comprising: a head extending away from the body and away from the actuator, the head movable to deform the body to release the first bar link from the first pectus bar.

In Example 42, the subject matter of Example 41 optionally includes the first bar link comprising: an arm connected to the body, the arm and the body together defining a slot configured to receive the bridge at least partially therein; and an arm actuator connected to the body and the arm and operable to move between a first position where the bridge is movable with respect to the body and a second position where the arm and the body engage the bridge to secure the first bar link to the bridge.

In Example 43, the apparatuses or method of any one or any combination of Examples 1-42 can optionally be configured such that all elements or options recited are available to use or select from.

The above detailed description includes references to the accompanying drawings, which form a part of the detailed description. The drawings show, by way of illustration, specific embodiments in which the invention can be practiced. These embodiments are also referred to herein as "examples." Such examples can include elements in addition to those shown or described. However, the present inventors also contemplate examples in which only those elements shown or described are provided. Moreover, the present inventors also contemplate examples using any combination or permutation of those elements shown or described (or one or more aspects thereof), either with respect to a particular example (or one or more aspects thereof), or with respect to other examples (or one or more aspects thereof) shown or described herein.

In the event of inconsistent usages between this document and any documents so incorporated by reference, the usage in this document controls. In this document, the terms "including" and "in which" are used as the plain-English equivalents of the respective terms "comprising" and "wherein." Also, in the following claims, the terms "including" and "comprising" are open-ended, that is, a system, device, article, composition, formulation, or process that includes elements in addition to those listed after such a term in a claim are still deemed to fall within the scope of that claim.

In this document, the terms "a" or "an" are used, as is common in patent documents, to include one or more than one, independent of any other instances or usages of "at least one" or "one or more." In this document, the term "or" is used to refer to a nonexclusive or, such that "A or B" includes "A but not B," "B but not A," and "A and B," unless otherwise indicated. In this document, the terms "including" and "in which" are used as the plain-English equivalents of the respective terms "comprising" and "wherein." Also, in the following claims, the terms "including" and "comprising" are open-ended, that is, a system, device, article, composition, formulation, or process that includes elements in addition to those listed after such a term in a claim are still deemed to fall within the scope of that claim. Moreover, in the following claims, the terms "first," "second," and "third," etc. are used merely as labels, and are not intended to impose numerical requirements on their objects.

The above description is intended to be illustrative, and not restrictive. For example, the above-described examples (or one or more aspects thereof) may be used in combination with each other. Other embodiments can be used, such as by one of ordinary skill in the art upon reviewing the above description. The Abstract is provided to comply with 37 C.F.R. § 1.72(b), to allow the reader to quickly ascertain the nature of the technical disclosure. It is submitted with the understanding that it will not be used to interpret or limit the scope or meaning of the claims. Also, in the above Detailed Description, various features may be grouped together to streamline the disclosure. This should not be interpreted as intending that an unclaimed disclosed feature is essential to any claim. Rather, inventive subject matter may lie in less than all features of a particular disclosed embodiment. Thus, the following claims are hereby incorporated into the Detailed Description as examples or embodiments, with each claim standing on its own as a separate embodiment, and it is contemplated that such embodiments can be combined with each other in various combinations or permutations. The scope of the invention should be determined with reference to the appended claims, along with the full scope of equivalents to which such claims are entitled.

The invention claimed is:

1. A pectus bar assembly for correcting pectus excavatum or pectus carinatum, the pectus bar assembly comprising:

a first pectus bar and a second pectus bar engageable with a sternum, the first pectus bar and the second pectus bar each configured to span across a sternum;

a first bar link connectable to the first pectus bar and translatable along the first pectus bar;

a second bar link connectable to the second pectus bar and translatable along the second pectus bar; and

a bridge defining a longitudinal axis, the bridge connectable to the first bar link and the second bar link, the first bar link and the second bar link independently translatable along the bridge, and the first bar link and the second bar link independently rotatable about the longitudinal axis of the bridge.

2. The assembly of claim **1**, the first bar link comprising:

a body; and

a shelf connected to the body, the shelf configured to receive a first end portion of the first pectus bar therein.

3. The assembly of claim 2, the first bar link comprising:

an actuator extending through a bore of the body, the actuator operable between an unlocked position where the actuator is disengaged from the first pectus bar and a locked position where the actuator is engaged with a second end portion of the first pectus bar to cause engagement between the first end portion of the pectus bar and the shelf to secure the first bar link to the first pectus bar.

4. The assembly of claim 3, wherein the actuator is rotatable to cause the actuator to translate within the bore of the body.

5. The assembly of claim 4, wherein the actuator is captivated within the bore of the body.

6. The assembly of claim 4, wherein a distal portion of the actuator is shaped to avoid engagement with an anterior portion of the first pectus bar when the actuator is moved from the unlocked position to the locked position.

7. The assembly of claim 3, the first bar link comprising:

a head extending away from the body and away from the actuator, the head movable to deform the body to release the first bar link from the first pectus bar.

8. The assembly of claim 7, wherein the head includes a rib graspable to manipulate the first bar link with respect to the bridge and the first pectus bar.

9. The assembly of claim 8, the first bar link comprising:

an arm connected to the body, the arm and the body together defining a slot configured to receive the bridge at least partially therein; and

an arm actuator connected to the body and the arm and operable to move between a first position where the bridge is movable with respect to the body and a second position where the arm and the body engage the bridge to secure the first bar link to the bridge.

10. The assembly of claim 9, wherein the arm and the body together form a clamp.

11. The assembly of claim 10, wherein the arm is connected to the body by a living hinge configured to allow the arm to elastically deflect with respect to the body when the arm actuator moves between the first position and the second position.

12. The assembly of claim 11, wherein the slot is a bore including an angled portion at an opening of the bore configured to allow the first bar link to tilt with respect to the longitudinal axis of the bridge when the bridge is positioned in the slot of the first bar link and the arm actuator is in the first position.

13. The assembly of claim 11, wherein the living hinge at least partially forms the slot.

14. The assembly of claim 1, wherein the bridge is a cylindrical rod.

15. A pectus bar assembly for correcting pectus excavatum or pectus carinatum, the pectus bar assembly comprising:

a first pectus bar and a second pectus bar engageable with a sternum, the first pectus bar and the second pectus bar each configured to span across a sternum;

a first bar link connectable to the first pectus bar and translatable along the first pectus bar;

a second bar link connectable to the second pectus bar and translatable along the second pectus bar; and

a rod extending along a longitudinal axis, the rod connectable to the first bar link and the second bar link, the first bar link and the second bar link independently translatable along the rod, and the first bar link and the second bar link independently rotatable about the longitudinal axis of the rod.

16. The assembly of claim 15, the first bar link comprising:

a body;

a shelf connected to the body, the shelf configured to receive a first end portion of the first pectus bar therein; and

an actuator extending through a bore of the body, the actuator rotatable between an unlocked position where the actuator is disengaged from the first pectus bar and a locked position where the actuator is engaged with a second end portion of the first pectus bar to cause engagement between the first end portion of the pectus bar and the shelf to secure the first bar link to the first pectus bar.

17. The assembly of claim 16, wherein the actuator is captivated within the bore by the body.

18. The assembly of claim 16, wherein a distal portion of the actuator is shaped to avoid engagement with an anterior portion of the first pectus bar when the actuator is moved from the unlocked position to the locked position.

19. The assembly of claim 16, the first bar link comprising:

a head extending away from the body and away from the actuator, the head movable to deform the body to release the first bar link from the first pectus bar.

20. The assembly of claim 19, the first bar link comprising:

an arm connected to the body, the arm and the body together defining a slot configured to receive the rod at least partially therein; and

an arm actuator connected to the body and the arm and operable to move between a first position where the rod is movable with respect to the body and a second position where the arm and the body engage the rod to secure the first bar link to the rod.

* * * * *