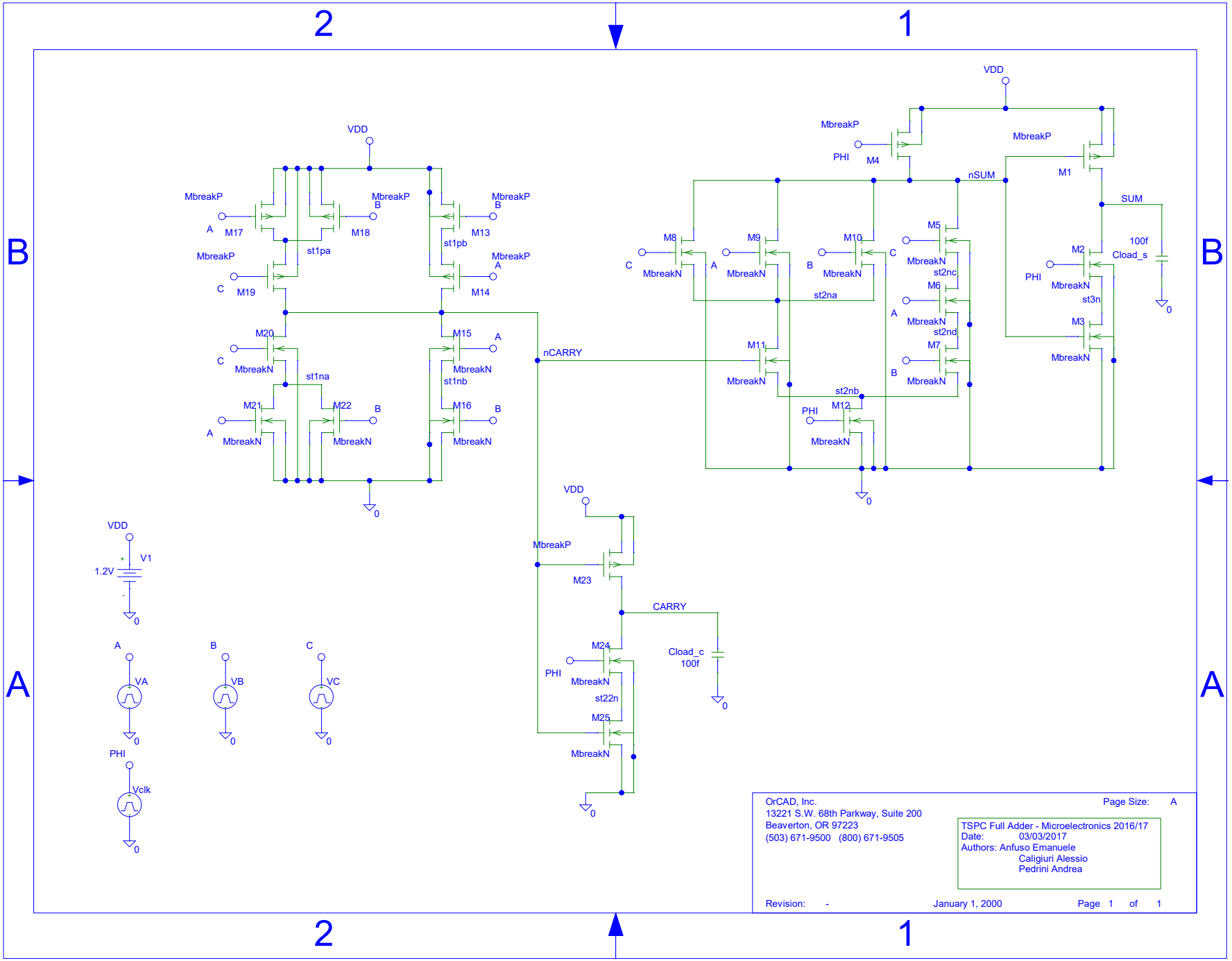

OrCAD, Inc.
13221 S.W. 68th Parkway, Suite 200
Beaverton, OR 97223
(503) 671-9500 (800) 671-9505

Page Size: A

TSPC Full Adder - Microelectronics 2016/17
Date: 03/03/2017
Authors: Anfuso Emanuele
Caligiuri Alessio
Pedrini Andrea

Revision: - January 1, 2000 Page 1 of 1