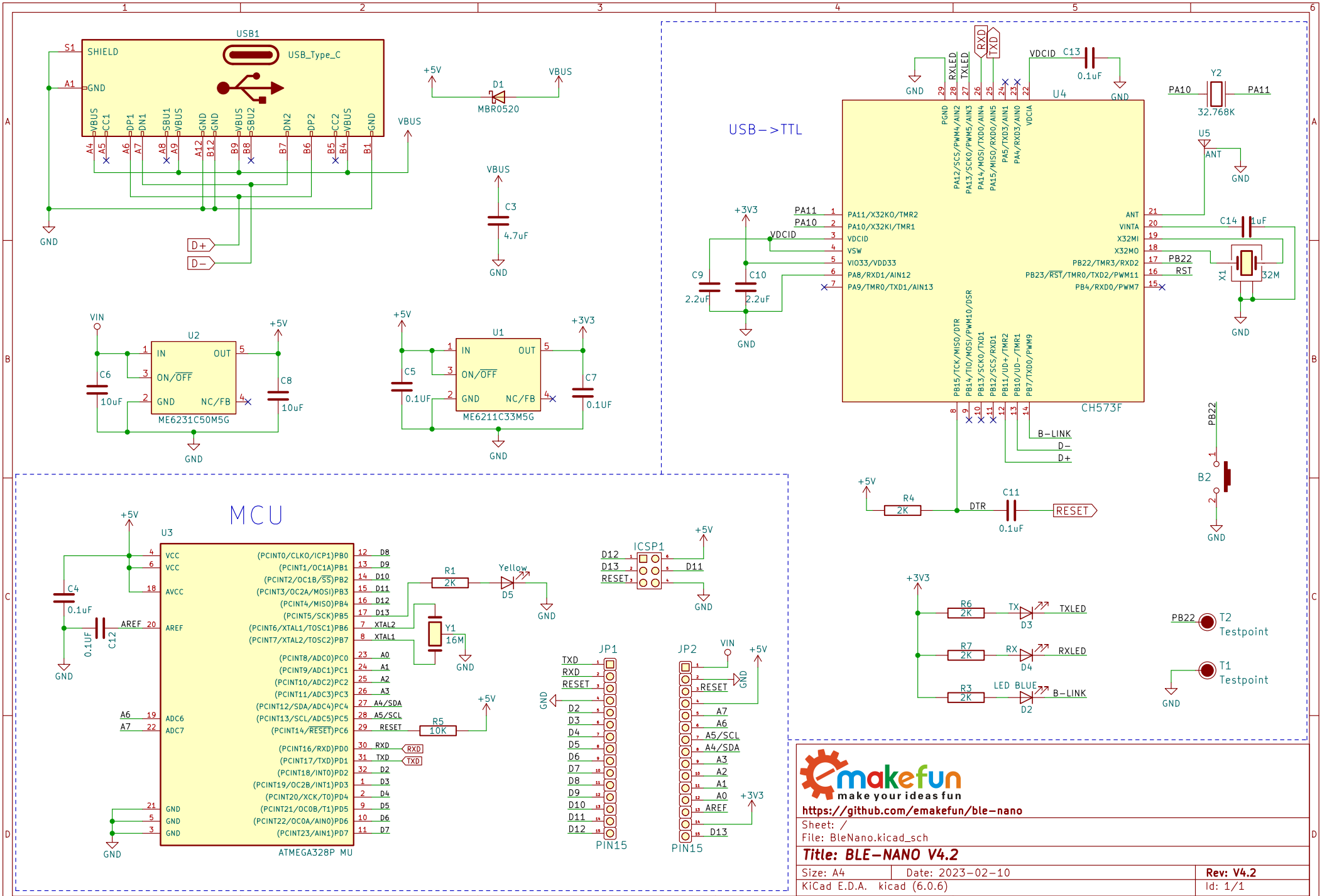
USB1
USB_Type_C
SHIELD
GND
VBUS
CC1
DP1
DN1
SBU1
SBU2
DN2
DP2
CC2
D+
D−
D1
MBR0520
+5V
C3
4.7uF
U2
ME6231C50M5G
IN
OUT
ON/OFF
NC/FB
C6
10uF
C8
10uF
VIN
U1
ME6211C33M5G
C5
0.1UF
C7
0.1UF
+3V3
USB−>TTL
U4
CH573F
PA11/X32KO/TMR2
PA10/X32KI/TMR1
VDCID
VSW
VIO33/VDD33
PA8/RXD1/AIN12
PA9/TMR0/TXD1/AIN13
PA12/SCS/PWM4/AIN2
PA13/SCKO/PWM5/AIN3
PA14/MOSI/TXD0/AIN4
PA15/MISO/RXD0/AIN5
PA5/TXD3/AIN1
PA4/RXD3/AIN0
PGND
VDCIA
ANT
VINTA
X32MI
X32MO
PB22/TMR3/RXD2
PB23/RST/TMR0/TXD2/PWM11
PB4/RXD0/PWM7
PB15/TCK/MISO/DTR
PB14/TIO/MOSI/PWM10/DSR
PB13/SCKO/TXD1
PB12/SCS/RXD1
PB11/UD+/TMR2
PB10/UD−/TMR1
PB7/TXD0/PWM9
RXD
TXD
RXLED
TXLED
C13
0.1uF
Y2
32.768K
PA10
PA11
U5
C14
1uF
X1
32M
PB22
RST
C9
2.2uF
C10
2.2uF
B−LINK
D−
D+
R4
2K
DTR
C11
0.1uF
RESET
B2
MCU
U3
ATMEGA328P MU
VCC
AVCC
AREF
ADC6
ADC7
(PCINT0/CLKO/ICP1)PB0
(PCINT1/OC1A)PB1
(PCINT2/OC1B/SS)PB2
(PCINT3/OC2A/MOSI)PB3
(PCINT4/MISO)PB4
(PCINT5/SCK)PB5
(PCINT6/XTAL1/TOSC1)PB6
(PCINT7/XTAL2/TOSC2)PB7
(PCINT8/ADC0)PC0
(PCINT9/ADC1)PC1
(PCINT10/ADC2)PC2
(PCINT11/ADC3)PC3
(PCINT12/SDA/ADC4)PC4
(PCINT13/SCL/ADC5)PC5
(PCINT14/RESET)PC6
(PCINT16/RXD)PD0
(PCINT17/TXD)PD1
(PCINT18/INT0)PD2
(PCINT19/OC2B/INT1)PD3
(PCINT20/XCK/T0)PD4
(PCINT21/OC0B/T1)PD5
(PCINT22/OC0A/AIN0)PD6
(PCINT23/AIN1)PD7
D8
D9
D10
D11
D12
D13
XTAL2
XTAL1
A0
A1
A2
A3
A4/SDA
A5/SCL
RESET
RXD
TXD
D2
D3
D4
D5
D6
D7
R1
2K
Yellow
D5
Y1
16M
R5
10K
ICSP1
D12
D13
RESET
D11
JP1
PIN15
JP2
VIN
A7
A6
A5/SCL
A4/SDA
A3
A2
A1
A0
AREF
D13
C4
0.1uF
C12
0.1UF
A6
A7
R6
2K
TX
D3
TXLED
R7
2K
RX
D4
RXLED
R3
2K
LED BLUE
D2
B−LINK
PB22
T2
Testpoint
T1
Testpoint
makefun
make your ideas fun
https://github.com/emakefun/ble-nano
Sheet: /
File: BleNano.kicad_sch
Title: BLE−NANO V4.2
Size: A4
Date: 2023−02−10
Rev: V4.2
KiCad E.D.A. kicad (6.0.6)
Id: 1/1