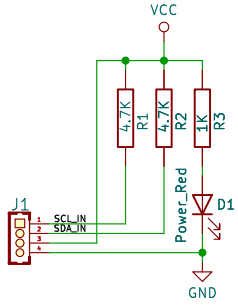

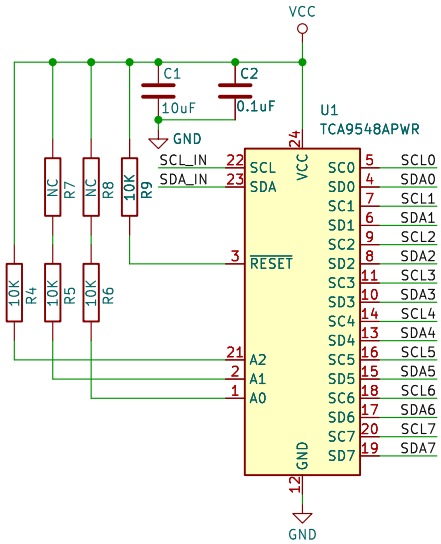

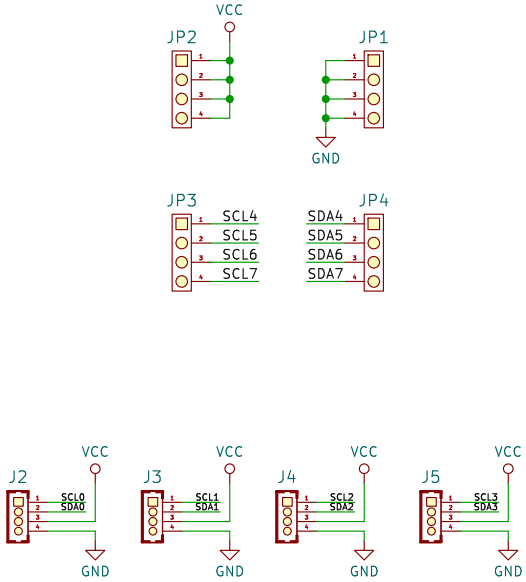

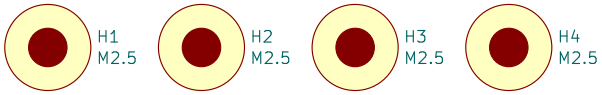

https://emakefun.github.io/emakefun-docsify

emakefun

Sheet: /

File: I2C_Cascade_Extender.kicad_sch

Title: I2C Cascade Extender

Size: A4	Date: 2026-02-10	**Rev: V1.0**
KiCad E.D.A. 8.0.3		Id: 1/1