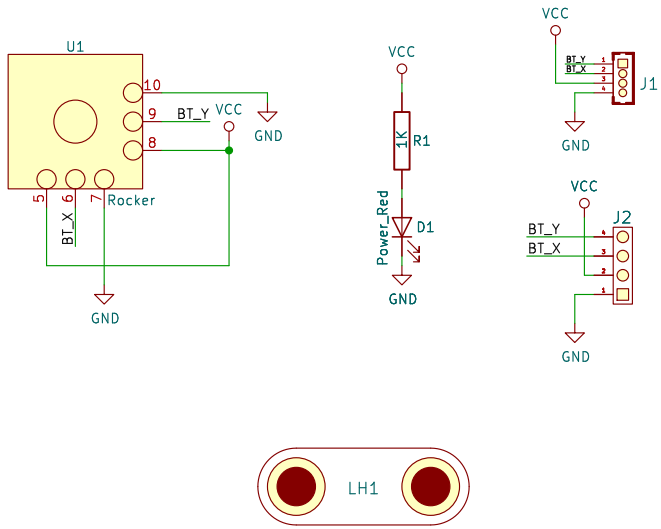

https://emakefun.github.io/emakefun-docsify

emakefun

Sheet: /

File: Rocker_Module.kicad_sch

Title: Rocker Module

Size: A4	Date: 2025-12-15	**Rev: V1.0**
KiCad E.D.A. 8.0.3		Id: 1/1