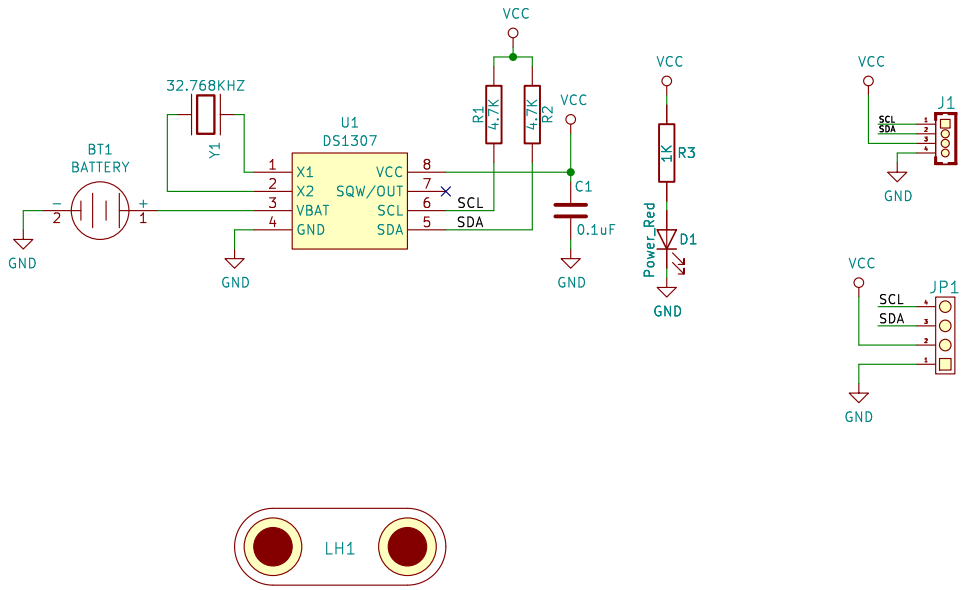

https://emakefun.github.io/emakefun-docsify

emakefun

Sheet: /

File: DS1307.kicad_sch

Title: DS1307

Size: A4	Date: 2026-01-29	**Rev: V1.0**
KiCad E.D.A. 8.0.3		Id: 1/1