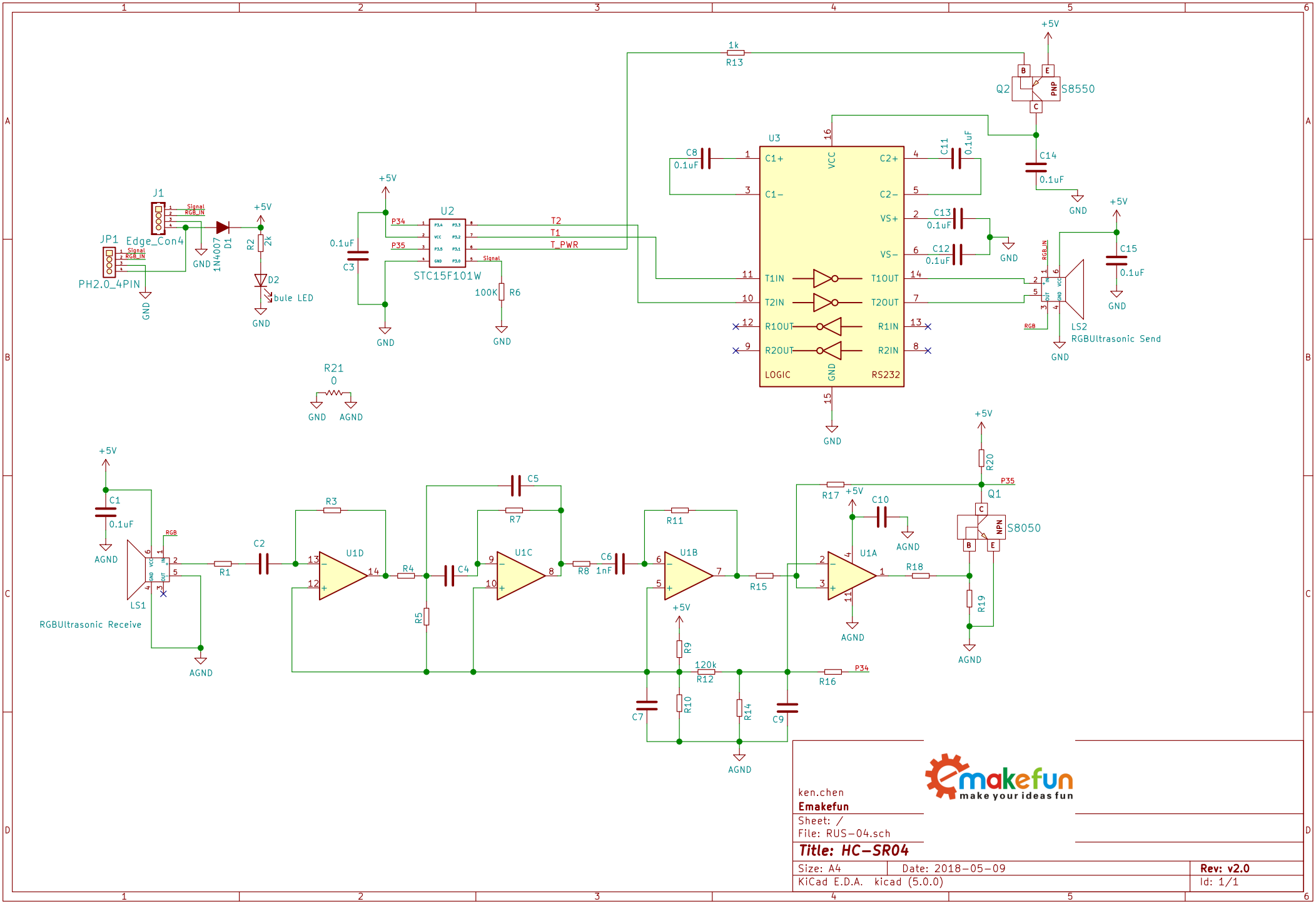

ken.chen
Emakefun
Sheet: /
File: RUS-04.sch

Title: HC-SR04

Size: A4	Date: 2018-05-09	**Rev: v2.0**
KiCad E.D.A. kicad (5.0.0)		Id: 1/1