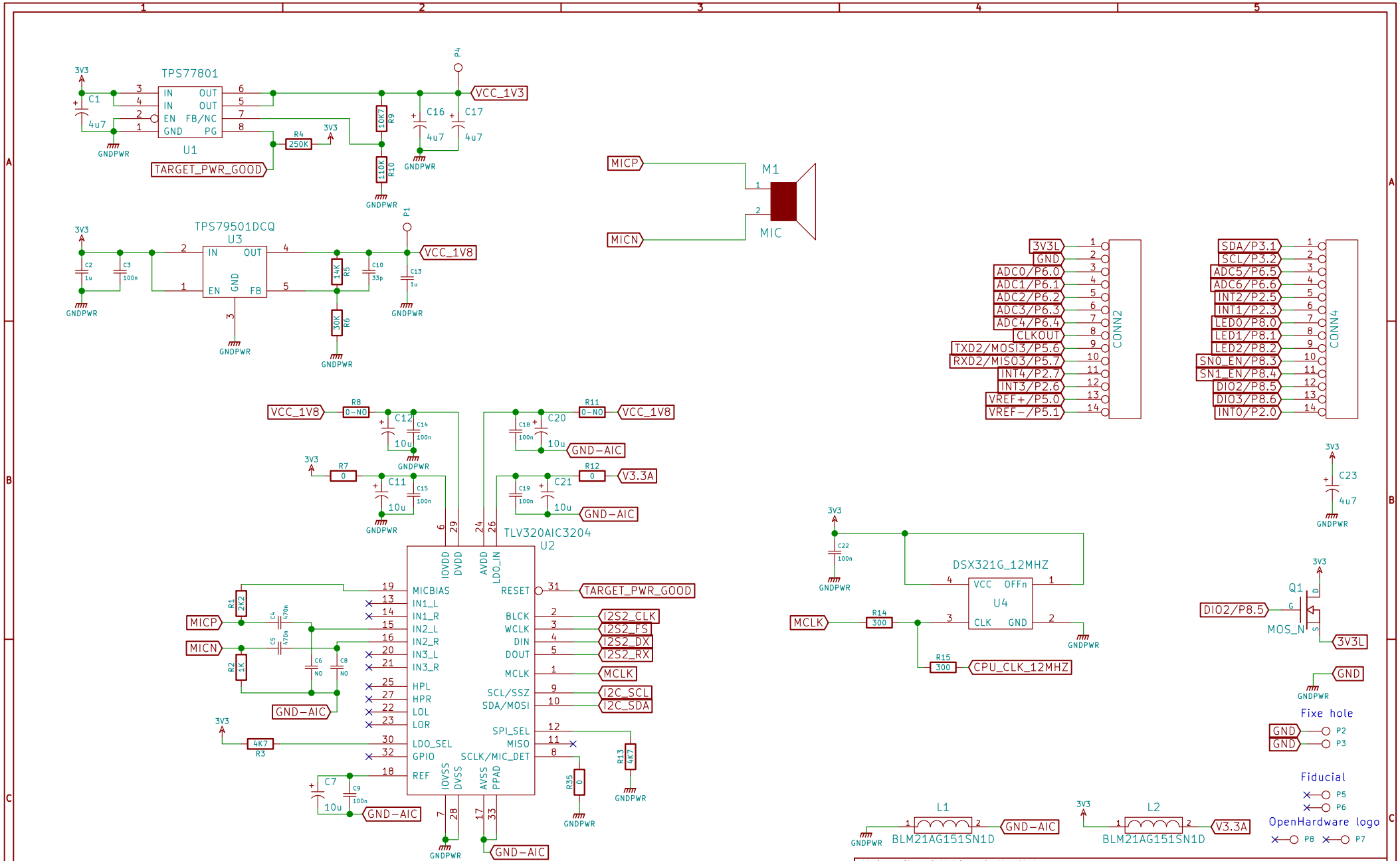
TPS77801
U1
IN
IN
EN
GND
OUT
OUT
FB/NC
PG
C1
4u7
R4
250K
R9
10K7
R10
110K
C16
4u7
C17
4u7
VCC_1V3
TARGET_PWR_GOOD
3V3
GNDPWR
TPS79501DCQ
U3
IN
OUT
EN
GND
FB
C2
1u
C3
100n
R5
14K
R6
30K
C10
33p
C13
1u
VCC_1V8
MICP
MICN
M1
MIC
CONN2
CONN4
3V3L
GND
ADC0/P6.0
ADC1/P6.1
ADC2/P6.2
ADC3/P6.3
ADC4/P6.4
CLKOUT
TXD2/MOSI3/P5.6
RXD2/MISO3/P5.7
INT4/P2.7
INT3/P2.6
VREF+/P5.0
VREF-/P5.1
SDA/P3.1
SCL/P3.2
ADC5/P6.5
ADC6/P6.6
INT2/P2.5
INT1/P2.3
LED0/P8.0
LED1/P8.1
LED2/P8.2
SN0_EN/P8.3
SN1_EN/P8.4
DIO2/P8.5
DIO3/P8.6
INT0/P2.0
R8
0-NO
R7
0
C11
10u
C12
10u
C14
100n
C15
100n
C18
100n
C20
10u
R11
0-NO
GND-AIC
C19
100n
C21
10u
R12
0
V3.3A
TLV320AIC3204
U2
IOVDD
DVDD
AVDD
LDO_IN
MICBIAS
IN1_L
IN1_R
IN2_L
IN2_R
IN3_L
IN3_R
HPL
HPR
LOL
LOR
LDO_SEL
GPIO
REF
RESET
BLCK
WCLK
DIN
DOUT
MCLK
SCL/SSZ
SDA/MOSI
SPI_SEL
MISO
SCLK/MIC_DET
IOVSS
DVSS
AVSS
PPAD
TARGET_PWR_GOOD
I2S2_CLK
I2S2_FS
I2S2_DX
I2S2_RX
MCLK
I2C_SCL
I2C_SDA
R1
2K2
R2
1K
C4
470n
C5
470n
C6
NO
C8
NO
R3
4K7
C7
10u
C9
100n
R13
4K7
R35
0
C22
100n
DSX321G_12MHZ
U4
VCC
OFFn
CLK
GND
R14
300
R15
300
CPU_CLK_12MHZ
C23
4u7
Q1
MOS_N
Fixe hole
Fiducial
OpenHardware logo
L1
BLM21AG151SN1D
L2
BLM21AG151SN1D
University of Urbino & NeuNet
File:
Sheet: /home/matteo/virtual-sense.hardware/1.1.0/TestAudioDSP/VirtualSense_TADSP.sch
Title: VirtualSense Audio DSP test Layer
Size: A4
Date: 26 Jun 2013
Rev: 1.1.0
KiCad E.D.A. eeschema (2013-mar-13)-testing
Id: 1/3

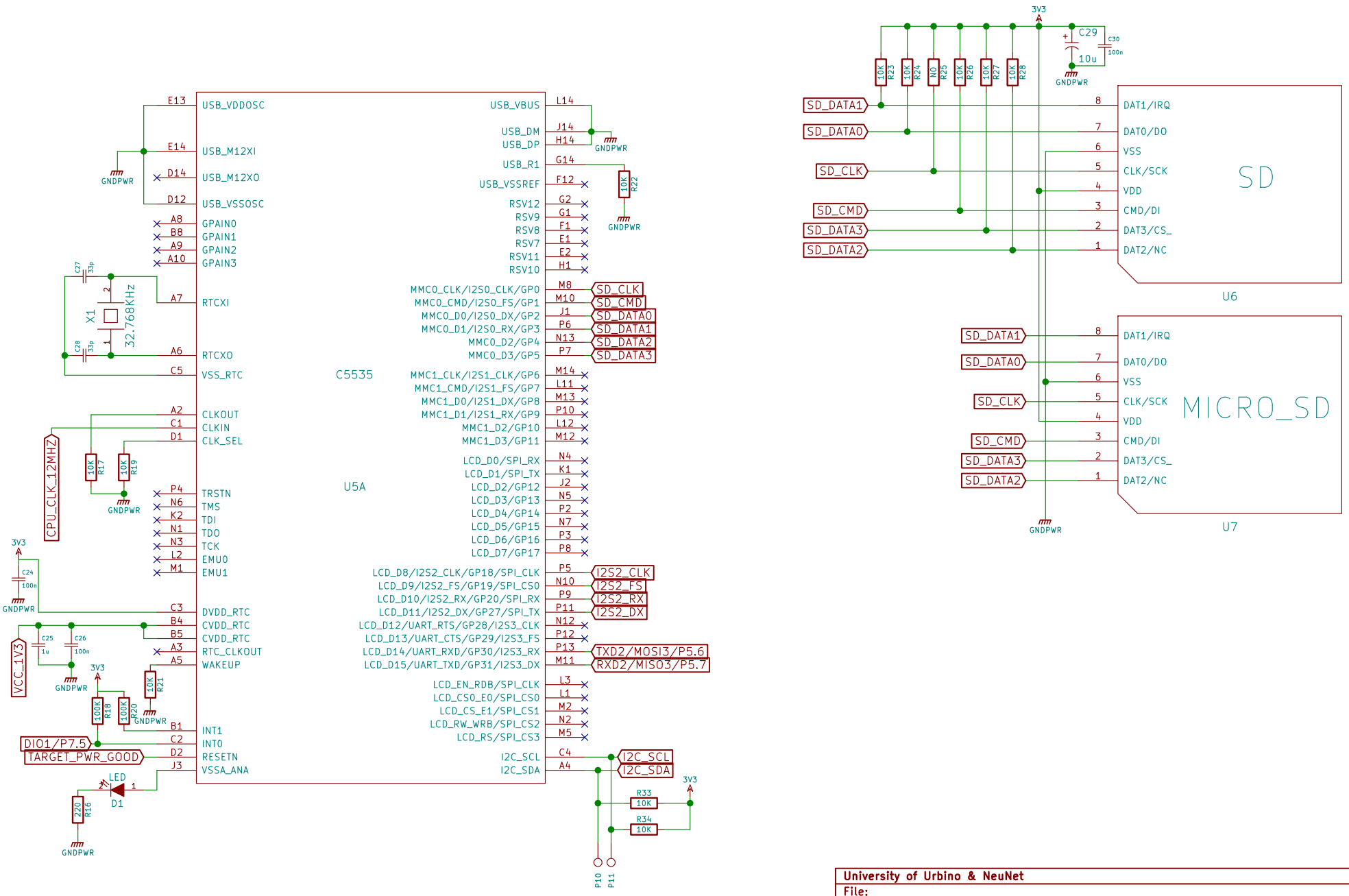

University of Urbino & NeuNet		
File:		
Sheet: VirtualSense_TADSP_2.sch		
Title: VirtualSense Audio DSP test Layer		
Size: A4	Date: 27 Aug 2013	Rev:
KiCad E.D.A. eeschema (2013-mar-13)-testing		Id: 2/3

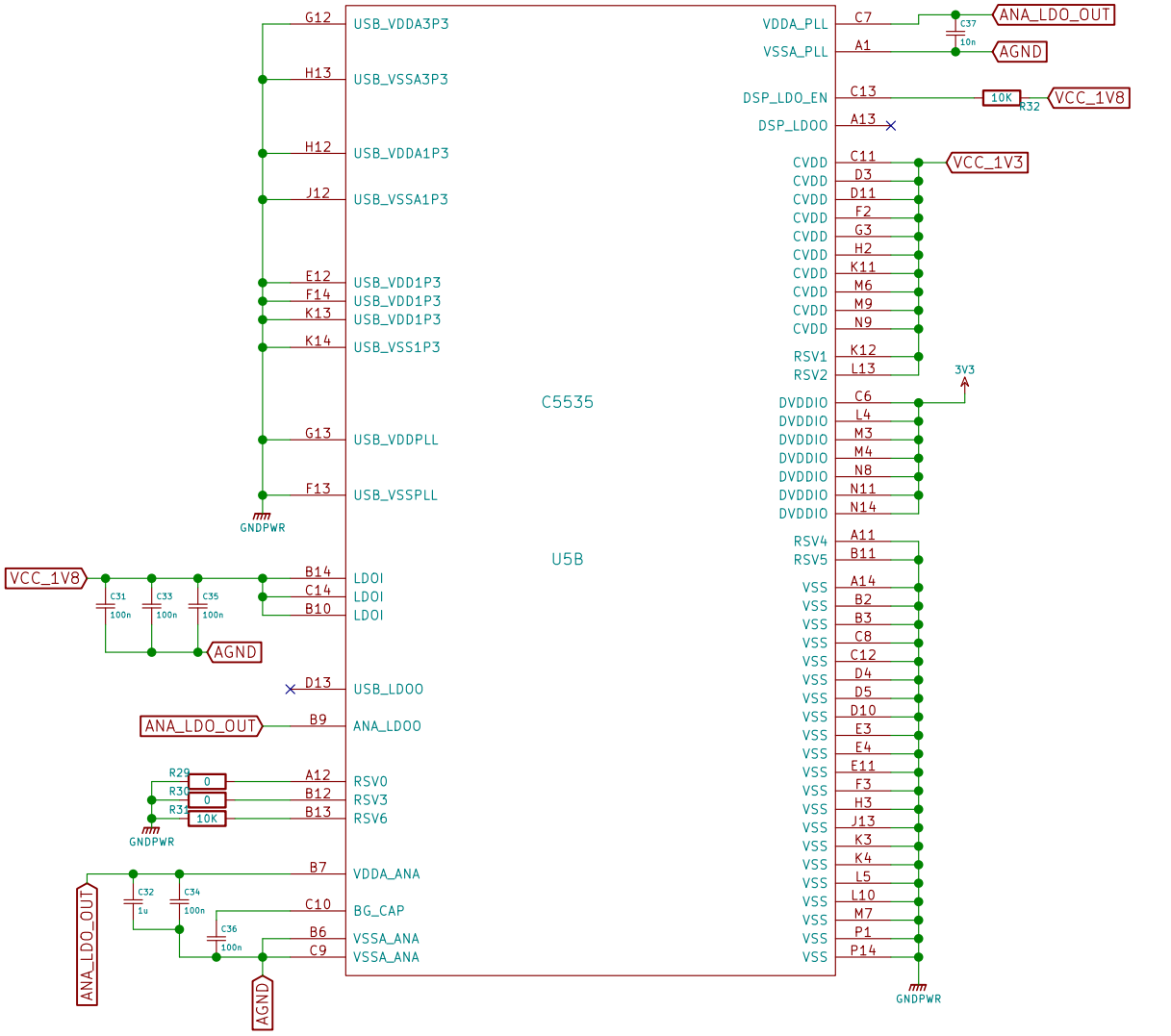

University of Urbino & NeuNet		
File:		
Sheet: VirtualSense_TADSP_3.sch		
Title: VirtualSense Audio DSP test Layer		
Size: A4	Date:	Rev:
KiCad E.D.A. eeschema (2013-mar-13)-testing		Id: 3/3