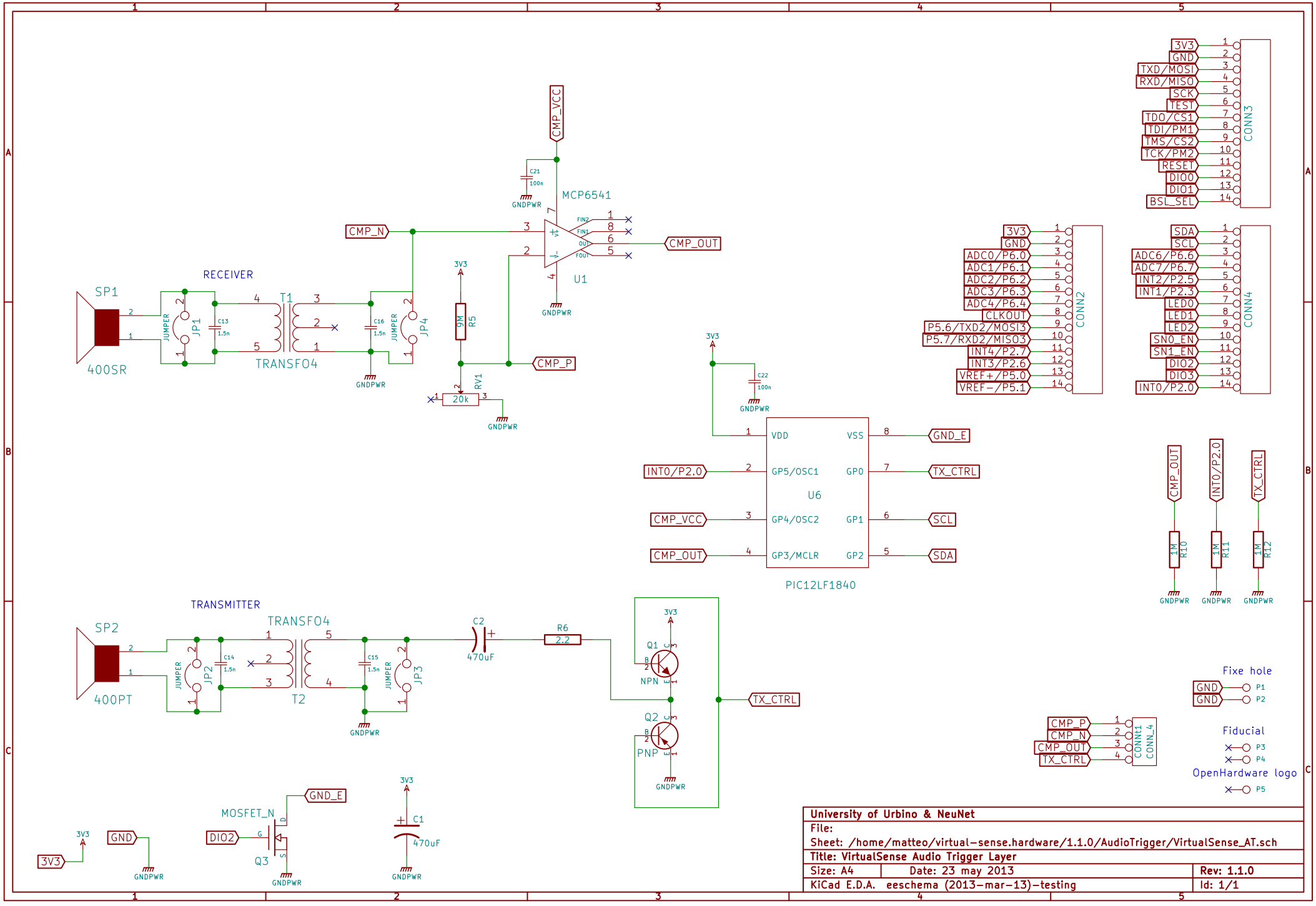

University of Urbino & NeuNet		
File:		
Sheet: /home/matteo/virtual-sense.hardware/1.1.0/AudioTrigger/VirtualSense_AT.sch		
Title: VirtualSense Audio Trigger Layer		
Size: A4	Date: 23 may 2013	Rev: 1.1.0
KiCad E.D.A. eeschema (2013-mar-13)-testing		Id: 1/1