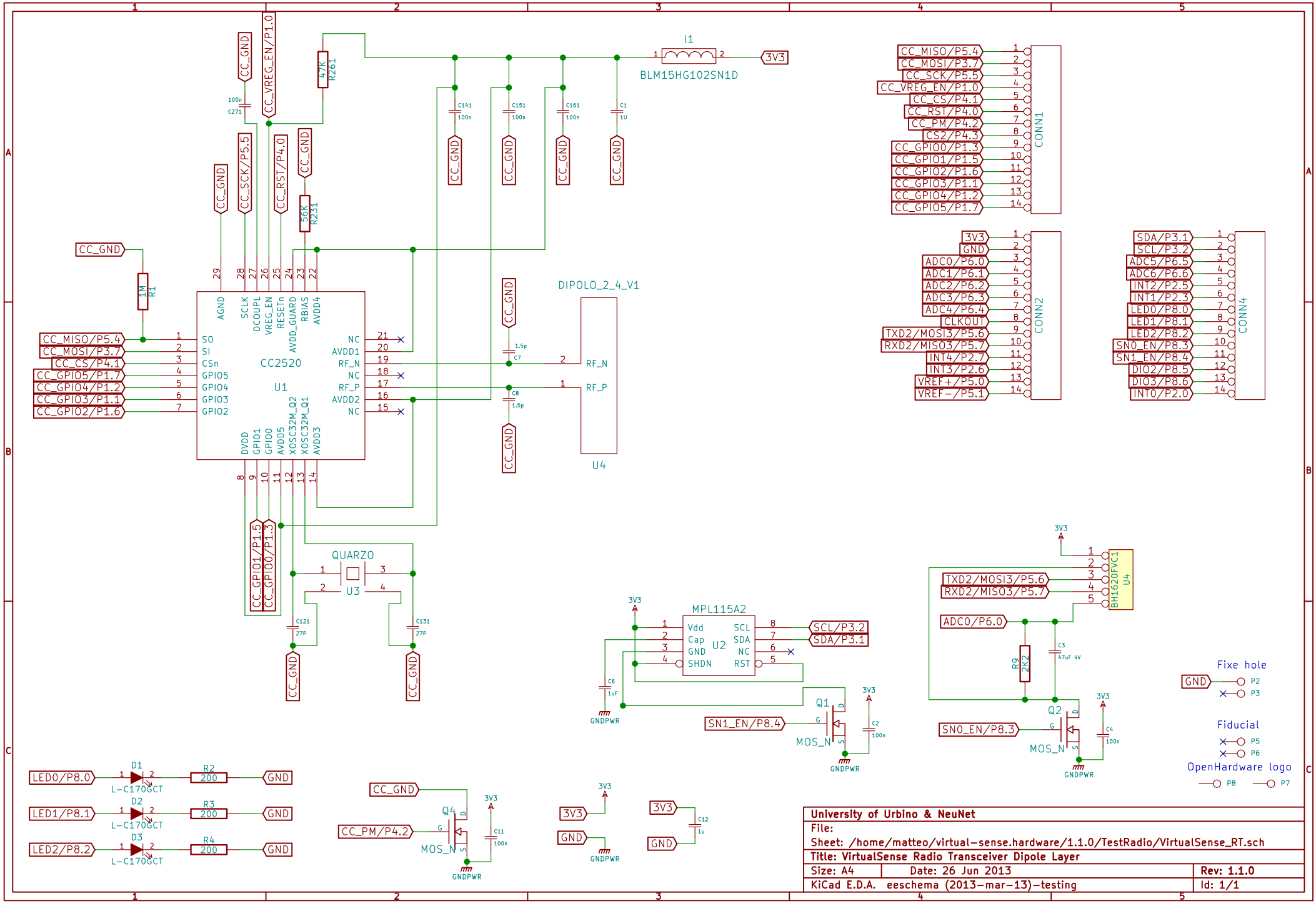

University of Urbino & NeuNet		
File:		
Sheet: /home/matteo/virtual-sense.hardware/1.1.0/TestRadio/VirtualSense_RT.sch		
Title: VirtualSense Radio Transceiver Dipole Layer		
Size: A4	Date: 26 Jun 2013	Rev: 1.1.0
KiCad E.D.A. eeschema (2013-mar-13)-testing		Id: 1/1