Design from scratch of a Formula 1000 racing car

Author:

Emanuele Mariniello

Abstract

The aim of this project is to design from scratch a Formula 1000 racing car using mainly standard components easily founded in the market.
The design is guided following the F1000 regulations of 2013 and the UNI and ISO design standards.
There are different software used during the project, such as Creo, Solidworks, Catia V5 and Siemens NX as CAD software, Matlab and PyCharm as mathematical solver and Ansys Workbench and Altair HyperWorks as FEA software.

Contents

1. Introduction 1
2. Engine 2
3. Trasmission 3
3.1 Sequential Gearbox 3
3.1.1 Design 3
3.1.1.1 Gears 3
3.1.1.2 Layshaft 13
3.1.1.3 Mainshaft 20
3.1.1.4 Extra components 29
3.1.2 Finite element analysis 32
3.1.2.1 Layshaft 32
3.1.2.2 Mainshaft 33
3.1.3 Overview 34
3.2 Differential 34
3.2.1 Design 34
3.2.2 Overview 41
4. Suspensions 41
5. Software 42
5.1 CAE Software 42
5.1.1 Altair® HyperWorks® 42
5.1.1.1 HyperMesh 42
5.1.1.2 HyperView 42
5.1.2 Ansys® 43
5.1.2.1 Ansys® Workbench 43
5.1.2.2 SpaceClaim 43
5.2 CAD Software 43
5.2.1 Siemens® NX 43
5.2.2 SolidWorks® 44
5.2.3 PTC Creo® 44
5.2.4 Catia V5 44
5.3 Mathematical Solvers 45
5.3.1 MATLAB® 45
5.3.2 PyCharm® 45
List of Figures 46
References 47

List of Acronyms

- F1000 = Formula 1000
- Kph = Kilometres per hour
- g.r. = Gear ratio
- rpm = Rotation per minut
- TBD = To be defined

1. Introduction

Formula 1000 is an open wheel class of Formula car racing, with professional and amateur series worldwide. Formula 1000 gets its name from the 1000 cc superbike engine used to power a single seat, open wheel race car with fully adjustable wings and suspension. The F1000 class, known in SCCA as FB, is similar to racing classes FA (Formula Atlantic) and FC (Formula Continental). In the United States, Formula 1000 races in the North American Formula 1000 Championship presented by American Racer Tire as well as SCCA amateur competition.

Formula 1000 RaceCars can reach speeds in excess of 270 kph; brake and corner beyond 3 g's; and provide a challenge to any driver, engineer, or team.

Figure 1-1 Formula 1000 car [2].

2. Engine

Following the F1000 regulation of 2013 [1] there are 4 engines that it is possible to select for the racing car, they are:

- Kawasaki ZX10R 1000
- Suzuki GSXR 1000
- Yamaha YZF R1
- Honda CBR 1000 RR

Honda CBR 1000 RR is the engine selected for this project, following there are all the specifications:

Capacity	999.8 cc / 61 cu-cu-in
Bore x Stroke	76 x 55.1 mm
Cooling System	Liquid cooled
Compression Ratio	12.3:1
Oil Capacity	3.7 Litres
Max Power	133 kW / 178 hp @ 12250rpm
Max Torque	114 Nm / 84.07 ft.lb @ 10500rpm

Table 1 - CBR 1000 RR Engine specs [4].

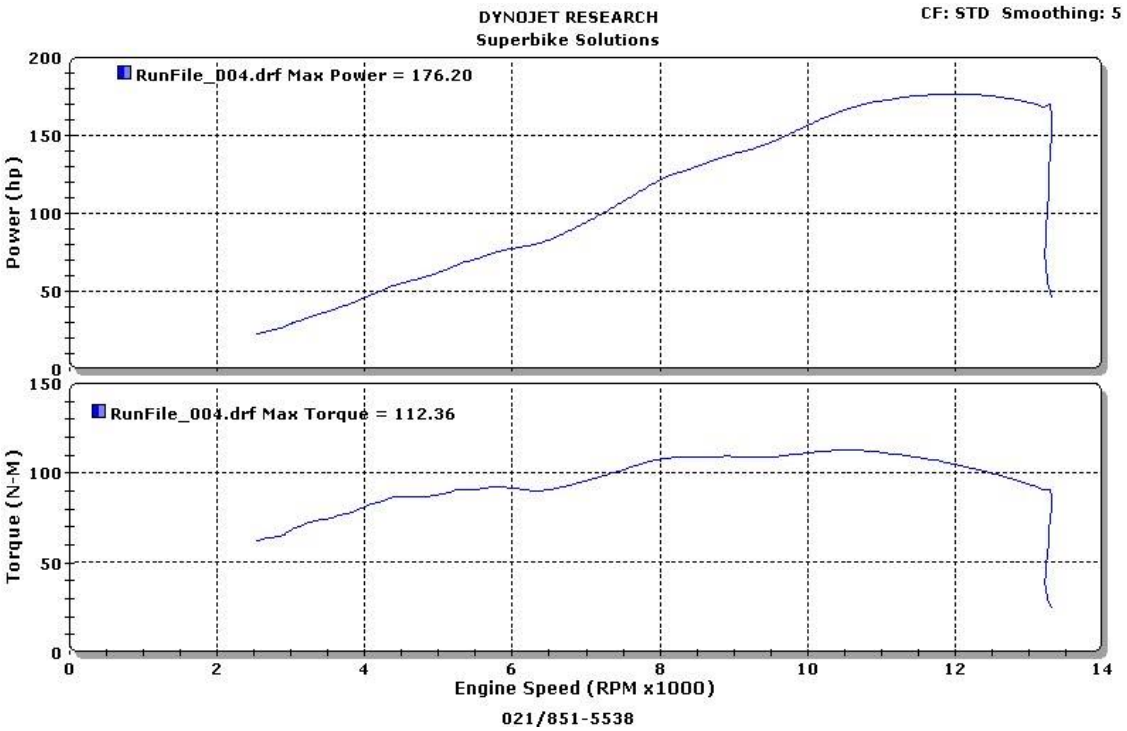

Figure 2-1 Dyno chart 2014 CBR1000RR [3].

3. Trasmission

3.1 Sequential Gearbox

Typically a sequential gearbox is installed in racing cars, in this project a sequential gearbox with 6th gears (no reverse gear) is going to be designed using commercial components.

3.1.1 Design

3.1.1.1 Gears

Once decided the engine, it is possible to start to design the sequential gearbox.

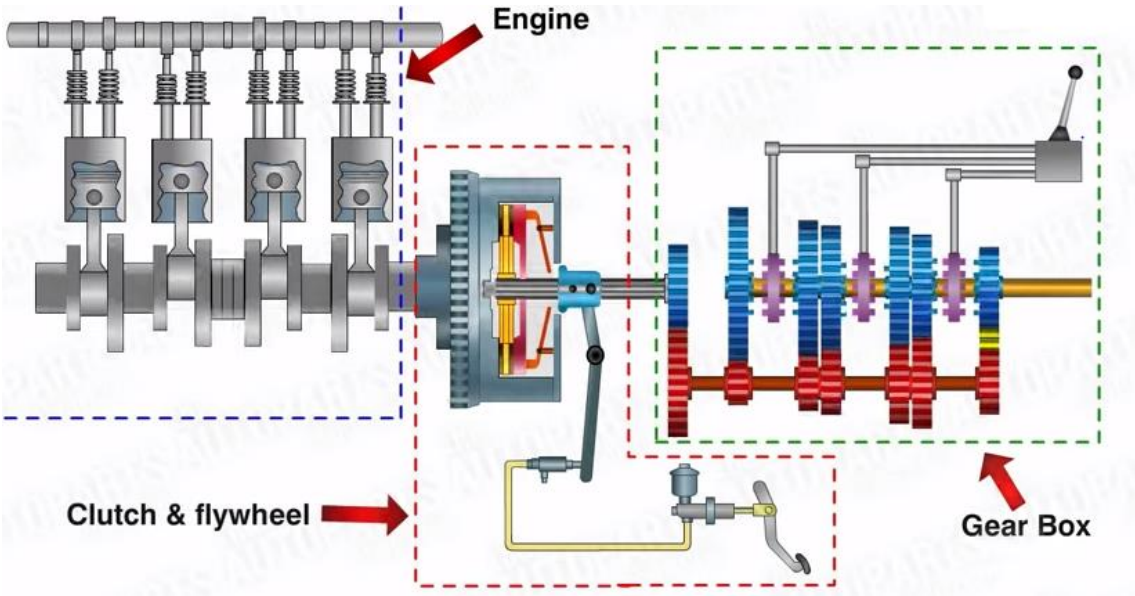

Figure 3-1 Overview of the sequential gearbox system [6].

The design of it starts calculating the peak torque at the rear wheels, a python code was created to perform this operation by following the procedure described below, to open it just run the file Index.bat in the main folder and select the following path in the script: Trasmission → Gearbox → Gear ratio.
Defining W as the weight of the racing car, L is the wheelbase and L_r as the distance of the center of mass from the rear wheel (this value in this case is an assumption using as reference a real F1 car) [5], them numerically are equivalent to:

$$W = 490 * 9.81 = 4806{,}9\ [N]; \quad L = 3500\ [mm] \quad L_r = 1787{,}5\ [mm]$$

From these data, the Static rear axle load W_R and the Static front axle load W_F are determined:

$$W_R = W * \frac{L_r}{L} = 4806{,}9 * \frac{1787{,}5}{3250} \cong 2643{,}80\ [N] \tag{1}$$

$$W_F = W * \frac{L_L}{L} = 4806{,}9 * \frac{1462{,}5}{3250} \cong 2163{,}10\ [N] \tag{2}$$

Consequential the Traction force is equal to:

$$F = \frac{W_R * \mu}{1 - \frac{h_m * \mu}{L}} = \frac{2643{,}80 * 1.5}{1 - \frac{325 * 1.5}{3250}} \cong\ 4665{,}52\ [N] \tag{3}$$

Where, μ is the average coefficient of friction between wheels and the road while h_m is the height of the centre of mass.
Next step is to evaluate the longitudinal load transfer ΔW_x:

$$\Delta W_x = \mp \frac{F * h_m}{L} = \mp \frac{4665{,}52 * 325}{3250} \cong \pm 466{,}55\ [N] \tag{4}$$

So, the Rear wheel loads W_{RR} and W_{RL} are equal to:

$$W_{RR}, W_{RL} = \frac{W_R + \Delta W_x}{2} = \frac{2643{,}80 + 466{,}55}{2} \cong 1555{,}17\ [N] \tag{5}$$

While the Front wheel loads W_{FR} and W_{FL} are equal to:

$$W_{FR}, W_{FL} = \frac{W_F - \Delta W_x}{2} = \frac{2163{,}10 - 466{,}55}{2} \cong 848{,}28\ [N] \tag{6}$$

Now it is possible to evaluate the Peak torque rear wheels T_{wheels}:

$$\begin{aligned} T_wheels &= (W_RR + W_RL\ ) * r_w * \mu \\ &= (1555{,}17 + 1555{,}17) * 0{,}33 * 1{,}5 \cong 1541\ [Nm] \end{aligned} \tag{7}$$

T_{wheels}, is very important because from it starts the defining of the gear ratios of the gear system beginning from the 1st gear ratio.

First thing is to define the minimum total 1st gear ratio, between the engine crankshaft and the wheel driveshafts, able to provide enough torque to the wheels in order to start the movement of the racing car; to do so, the following equation is used:

$$\min total\ 1^{st} gear\ ratio = \frac{T_{wheels}}{T_{Engine}} \tag{8}$$

T_{wheels} is already defined, T_{Engine} is defined analyzing the engine Dyno chart (Figure 2-1). This value is selected thinking at the torque provided by the engine and at which range of rpm it is available.
This range needs to be big enough to help the driver, at the starting race, to do not have that the car shuts down, but at the same time, this ratio does not need to be too small otherwise the top speed of the 1st gear is low.

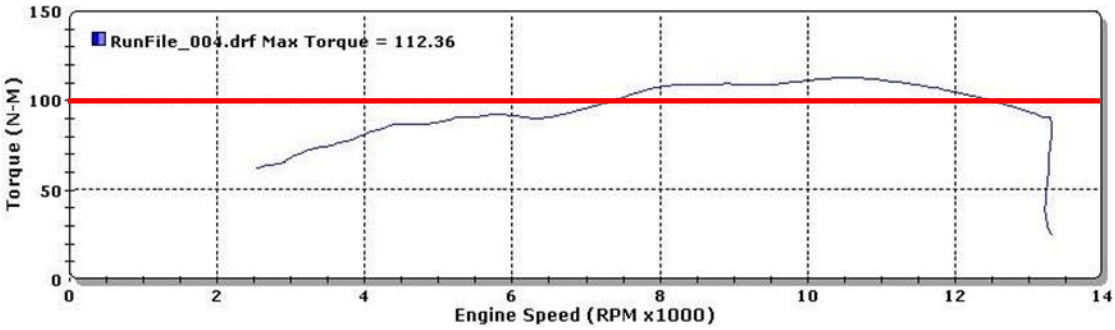

Figure 3-2 Tengine Selection.

Selecting T_{Engine} equal to 100 Nm, as it is possible to observe in the Figure 3-2, the rpm range is quite big (from around 7500 rpm to around 12500 rpm) so the engine within this range will provide enough torque and the driver, at the starting of the race, with a proper gear ratio, it will be able to start the race without any problem.
So the minimum total 1st gear ratio is equivalent to:

$$\min total\ 1^{st} gear\ ratio = \frac{T_{wheels}}{T_{Engine}} = \frac{1541}{100} = 15{,}41 \tag{9}$$

The total gear ratio, in the gearbox, is evaluated multiplying every gear ratio per each coupling of gear wheels active; each engaged gear has inside this multiplication the primary gear reduction, between input shaft from the engine and the layshaft (connection visible in the Figure 3-3), the gear ratio of the differential and the relative coupling of gear wheels associated to the gear engaged.

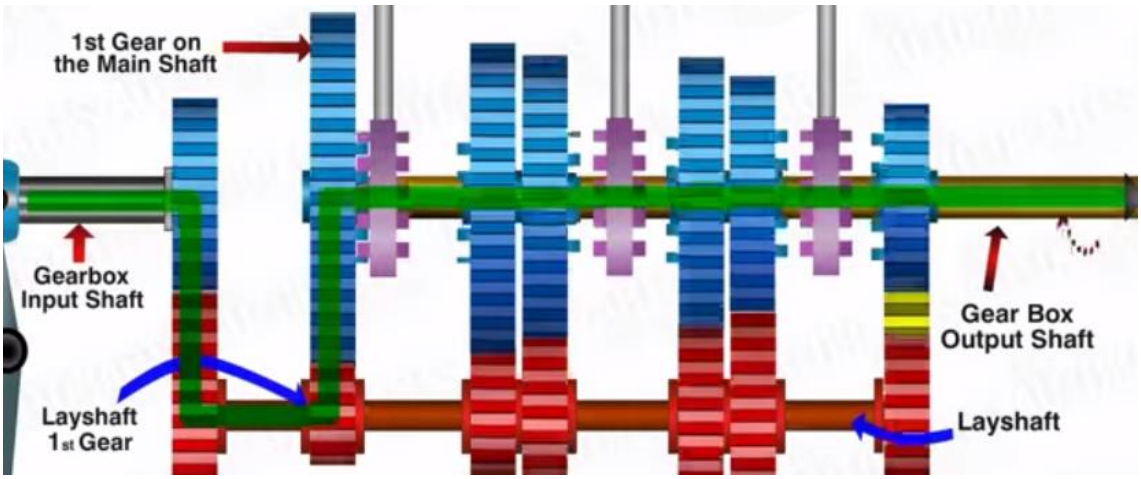

Figure 3-3 Example of 1st gear inserted [6].

Using as a reference the same kinds of gearboxes, both the gear ratio of the primary reduction (i_{pr}) and the differential ($i_{differential}$) are fixed respectively to 1,8125 and 3,5625, so from these ratios it is possible to find the minimum gear ratio required engaging the 1st gear.

$$1^{st}\,gear\ ratio = \frac{\min total\ 1^{st} g.r.}{(i_{pr}) * (i_{differential})} = \frac{15{,}41}{1{,}8125 * 3{,}5625} \cong 2{,}39 \qquad (10)$$

The racing cars use spur gears, also if they tend to vibrate and become noisy at higher speeds, not so important compared to the fact that they have a better way to transmit torque compared to helical gears.
So fixing helix angle β=0° and the pressure angle α=20°, with the Table 2 is it possible knowing the gear ratio (u in this table) the minimum number of teeth required for the gears with external teeth (in Italian *"Dentatura esterna"*), in this case the number is equal to 15, so z_1, which represents the number of teeth of the driving gear, is set as 15.

Tabella I.87 Numero minimo di denti per α = 20° e β = 0

Tipo di ingranaggio	*Rapporto $u = z_2/z_1$*	*Numero minimo di denti*
Dentatura esterna	1	13
	1,25	13
	1,5	14
	2,5	15
	5	16
	10	17
Pignone-dentiera	∞	17
Dentatura interna	10	18
	5	19
	2,5	21
	1,5	24

Table 2 - Minimum number of teeth spur gear [7].

Starting from 2.39, the 1st ratio is sought, with a 15-tooth wheel, which returns an integer number of teeth to the second wheel (z_2).
The gear ratio (defined as i) in question is 2,4:

$$z_2 = i * z_1 = 2{,}4 * 15 = 36 \tag{11}$$

Check that the total 1st gear ratio is greater than the minimum value:

$$\begin{aligned} Total\ 1^{st} gear\ ratio &= (i_{pr}) * (i_{differential}) * (i_{1^{st}}) \\ &= 1{,}8125 * 3{,}5625 * 2{,}4 \cong 15{,}4969 > 15{,}41 \end{aligned} \tag{12}$$

From this point, it is possible to define the other ratios thinking mainly, but not only, about at which speed the driven reaches before changing gear. The maximum speed, so also the point when it is better to change gear, is reached when the engine is able to provide the maximum torque, in the Honda CBR 1000 RR this happens when it reaches around 13000 rpm (Figure 2-1).
An estimation of the speed that the vehicle can reach at that moment for each gear engaged, can be done using this formula, in this cased used for the 1st gear:

$$\begin{aligned} Max\ speed\ 1^{st} gear &= \frac{Max\ power\ rpm * \pi * \Phi_{wheel} * 60}{1000 * Total\ 1^{st} gear\ ratio} \\ &= \frac{13000 * \pi * 0{,}3302 * 60}{1000 * 15{,}4969} \cong 52{,}21\ [km/h] \end{aligned} \tag{13}$$

Where Φ_{wheel} is the diameter of the wheels in meters.
As will be later explained in paragraphs 3.1.1.1.1 and 3.1.1.1.2, by calculating the minimum modulus for each gear coupling, it is established that the modulus of the all the spur gears inside the gear box is fixed at 5. An important constraint in the gearbox system is that the wheelbase between each gear coupling needs to be the same, it can be satisfied by the following calculation:

$$\begin{aligned} wheelbase\ 1^{st} gear &= \frac{module * (z_1 + z_2)}{2} = \frac{5 * (15 + 36)}{2} \\ &= 127{,}5\ [mm] \end{aligned} \tag{14}$$

Observing the equation (14) to have the same wheelbase, having the same module, the sum of the teeth of the gears coupled must be the same everywhere in the gearbox (except for the primary reduction and the differential), in this case, the sum is equal to 15 + 36 = 51, and the gear ratio is related to the teeth with this expression:

$$gear\ ratio = \frac{z_2}{z_1} \tag{15}$$

So playing with the constraint of the total number of teeth and the maximum speed achieved at the end of the gear before the shift, it is possible to establish every gear ratio. In the project folder called *Trasmission* there is an excel file called *Design.xlsx* where it possible to find all the operations explained before, but in the next table is represented directly the final gear ratio output established from it.

	Gear ratio	z_1	z_2	z_1+z_2	wheelbase [mm]
Primary reduction	1,8125	16	29	45	112,50
1st	2,4000	15	36	51	127,50
2nd	1,5500	20	31	51	127,50
3rd	0,8889	27	24	51	127,50
4th	0,7000	30	21	51	127,50
5th	0,5938	32	19	51	127,50
6th	0,5000	34	17	51	127,50
Differential	3,5625	TBD	TBD	TBD	-

Table 3 - Gear ratios.

At this point is possible design every gear wheel in the gearbox.

3.1.1.1.1 Spur Gears

In the project folder *Trasmission\Gearbox\Gears\Matlab* are present Matlab scripts called *Design_xxx_gear.m* where all the operations explained in the following paragraph are executed, the procedure design it extracted mainly from the manual "Manuale di Meccanica" [7].
The 1st gear is going to be used as an example case, also because it is the first gear connection where all the necessary data are defined.
Remembering that spur gears are used in a racing gearbox, it is possible to define the helix angle β=0° and the pressure angle α=20° and as defined before the gear ratio i = 2,4. The material selected is the steel C60 (EN 10277-5) with has the ultimate tensile strength $\sigma_R = 900\ [{}^{N}/_{mm^2}]$, the Young modulus $E = 217\ [GPa]$ and the Brinell hardness $HB = 215\ [HB]$.
Designing the spur gear wheels to wear-resistant, another evaluation is: how many hours the designed gearbox needs to work before it can have failures? The gearbox needs to survive at least for 6 full grand prix that is around 50 hours in total.
Everything now is specified, so the first step is to calculate the coefficient K_1:

$$K_1 \cong 1{,}18 * \sqrt{\frac{E_1 * E_2}{E_1 + E_2}} = 1{,}18 * \sqrt{\frac{217 * 217}{217 + 217}} \cong 388{,}68\ [{}^{\sqrt{N}}/_{mm}] \qquad (16)$$

both the gear wheels are made with the same material so E_1 and E_2 are the same. The k constant now is calculated:

$$k = \sqrt[3]{\frac{2 * K_1^2}{z_1^2 * \sin(2 * \alpha)} * \left(1 + \frac{z_1}{z_2}\right)} = \sqrt[3]{\frac{2 * (388{,}68)^2}{(15)^2 * \sin(2 * 20)} * \left(1 + \frac{15}{36}\right)} \cong 14{,}36 \left[\sqrt[3]{N/_{mm^2}}\right] \quad (17)$$

Now the admissible pressure on the tooth p_{adm} can be evaluated:

$$p_{adm} = 24{,}5 * \frac{HB}{\sqrt[6]{n_1 * h}} = 24{,}5 * \frac{215}{\sqrt[6]{7172{,}4 * 50}} \cong 625 \left[N/_{mm^2}\right] \quad (18)$$

Where h is the minimum working hours of the gearbox, defined before, and n_1 is the rotational speed in rpm that is calculated from the gearbox input shaft:

$$n_1 = \frac{n_i}{i_{pr}} = \frac{13000}{1{,}8125} \cong 7172{,}4 \text{ [rpm]} \quad (19)$$

So now it is possible to calculate the minimum module that the gear wheels need to have:

$$m_{min} = k * \sqrt[3]{\frac{T * cos^2(\beta)}{\lambda * p_{adm}^2}} = 14{,}36 * \sqrt[3]{\frac{114000 * cos^2(0)}{10 * (625)^2}} \cong 4{,}42 \quad (20)$$

Where T in the torque provided by the engine in $[N * mm]$ and $\lambda = \frac{b}{m} = 10$, where m is module and b is the width of the gear wheels (Figure 3-4).
Selecting the module equal to 5, a check needs to be accomplished throught the admissible pressure p_{adm}, evaluating the maximum pressure on the side of the tooth p_{max}:

$$p_{max} \cong K_1 * \sqrt{\frac{2 * T}{b * d_{p1} * \sin(2 * \alpha)} * \left(\frac{1}{d_{p1}} + \frac{1}{d_{p2}}\right)} = 388{,}68 * \sqrt{\frac{2 * 114000}{50 * (5 * 15) * \sin(2 * 20)} * \left(\frac{1}{(5 * 15)} + \frac{1}{(5 * 36)}\right)} = 519{,}54 \left[N/_{mm^2}\right] \leq 625 \left[N/_{mm^2}\right] = p_{adm} \quad (21)$$

The check is positive, so means that the module selected is good; inside the equation there are present d_{p1} and d_{p2} that they are the pitch diameters respectively of the gear wheel on the layshaft and the gear wheel on the mainshaft.
Evaluating m_{min} for each gear and checking that $p_{max} \leq p_{adm}$, all the gear wheels in the gearbox are verified with a module equal to 5.

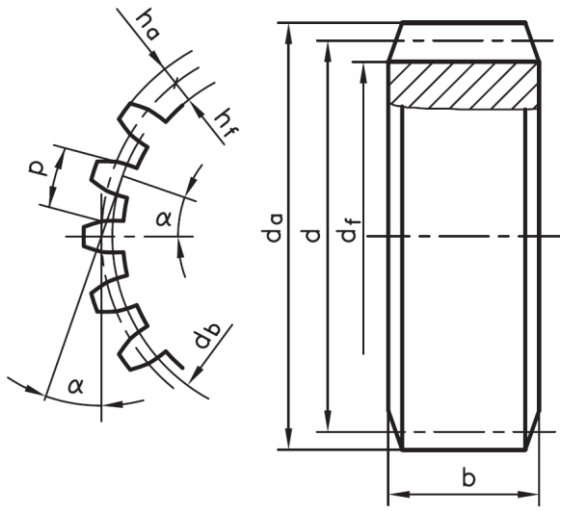

Figure 3-4 Spur gear sketch.

3.1.1.1.2 Bevel Gears

In the project folder *Trasmission\Gearbox\Gears\Matlab* is present a Matlab script called *Design_differential.m* where all the operations explained in the following paragraph are executed, the procedure design it extracted mainly from the manual "Manuale di Meccanica" [7].
The connection between gearbox and differential (the next component towards the wheels) is made up of straight-toothed bevel gears, the case study will be the 6th gear because it has the highest speed among all the gears, defining n_1 as the rotational speed of the mainshaft, its rotational speed is equal to:

$$n_1 = \frac{n_{engine}}{i_{primary} * i_{6^{th}gear}} = \frac{13000}{1{,}8125 * 0{,}5} \cong 14344{,}8\ [rpm] \tag{22}$$

The gear ratio of the bevel gears is defined by:

$$i = \frac{\omega_1}{\omega_2} = \frac{z_2}{z_1} = \frac{\sin\delta_2}{\sin\delta_1} \tag{23}$$

Where δ_2 is the pitch angle of the bevel gear on the driveshaft while δ_1 is the pitch angle of bevel gear attached to the mainshaft (so the output from the gearbox), to better understand what they are, the following figure has a representation:

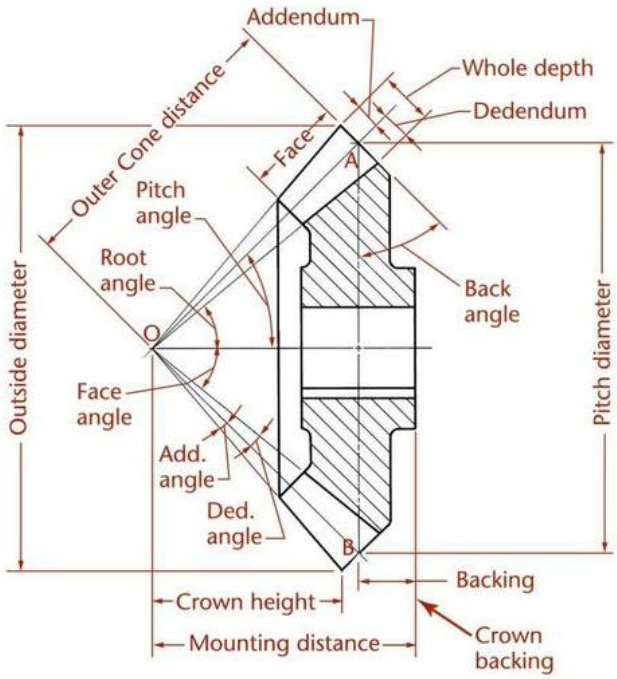

Figure 3-5 Bevel gears terminology [10].

The gear ratio of the differential is defined in paragraph 3.1.1.1 and is equal to 3,5625 (Table 3) and from it, the variable z_1 is assigned the value 16 through the minimum number of teeth allowed by this gear ratio (Table 2).
From the equation (23) also z_2 can be evaluated and it is equal to:

$$z_2 = i * z_1 = 3{,}5625 * 16 = 57 \tag{24}$$

Now $\delta_2 + \delta_1 = 90^\circ$ so from the equation (23) δ_2 can be extracted:

$$i = \frac{\sin\delta_2}{\sin\delta_1} = \frac{\sin\delta_2}{\sin(90-\delta_2)} = \frac{\sin\delta_2}{\cos\delta_2} \implies \delta_2 = \tan^{-1}(i) = \tan^{-1} 3{,}5625 \cong 74{,}32^\circ \tag{25}$$

Consequently $\delta_1 = 90^\circ - 74{,}32^\circ = 15{,}68^\circ$.
Due to the fact that also in this case it will be used the steel C60 to produce the bevel gear wheels K_1, as already calculated with the equation (16), is equal to 388,68 $[\sqrt{N}/_{mm}]$.

Next step is to find the constant k_c, also in these gear wheels have the pressure angle $\alpha = 20°$:

$$k_c = \sqrt[3]{\frac{2 * K_1^2}{z_1^2 * \sin(2 * \alpha)} * \left(1 + \frac{z_1 * \cos\delta_2}{z_2 * \cos\delta_1}\right)} = \sqrt[3]{\frac{2 * 388{,}68^2}{16^2 * \sin(2 * 20)} * \left(1 + \frac{16 * \cos(74{,}32)}{57 * \cos(15{,}68)}\right)} \cong 12{,}56 \quad (26)$$

The admissible pressure on the tooth p_{adm} is evaluated with the equation (18):

$$p_{adm} = 24{,}5 * \frac{HB}{\sqrt[6]{n_1 * h}} = 24{,}5 * \frac{215}{\sqrt[6]{14344{,}8 * 50}} \cong 556{,}75\ [{}^{N}/_{mm^2}] \quad (27)$$

The average module of the bevel gear wheels is equal to:

$$m_m = k_c * \sqrt[3]{\frac{T * \xi * cos^2(\delta_1)}{\lambda_m * p_{adm}^2}} = 12{,}56 * \sqrt[3]{\frac{114000 * 1{,}4 * cos^2(15{,}68)}{5 * (556{,}75)^2}} \cong 5{,}74 \quad (28)$$

Where ξ is the corrective coefficient equal to 1,4 for common gears, and the average $\lambda_m = \frac{b}{m_m} = 5$.
So a standard module equal $m = 6$ is assumed, m_m accordingly to the assumption becomes:

$$m_m = \frac{m}{\left(1 + \frac{\lambda_m}{z_1} * \sin\delta_1\right)} = \frac{7}{\left(1 + \frac{5}{16} * \sin(15{,}68)\right)} \cong 5{,}53 \quad (29)$$

A check of the pressure on the tooth needs to be performed:

$$p_{max} \cong K_1 * \sqrt{\frac{2 * T * \xi * \cos\delta_1}{b * m_m * z_1 * \sin(2 * \alpha)} * \left(\frac{\cos\delta_1}{m_m * z_1} + \frac{\cos\delta_2}{m_m * z_2}\right)}$$
$$= 388{,}68$$
$$* \sqrt{\frac{2 * 114000 * 1{,}4 * \cos(15{,}68)}{35 * (5{,}53 * 15) * \sin(2 * 20)} * \left(\frac{\cos(15{,}68)}{(5{,}53 * 16)} + \frac{\cos(74{,}32)}{(5{,}53 * 57)}\right)} \tag{30}$$
$$\cong 554{,}29 \left[{}^{N}/_{mm^2}\right] \leq 556{,}75 \left[{}^{N}/_{mm^2}\right] = p_{adm}$$

The check is positive.

3.1.1.2 Layshaft

Once all the gear wheels are defined, it is possible to determinate all the loads acting on them using the following equations from the spur gears:

$$S_t = \frac{2 * T}{d_p} \ (tangential\ load\ in\ N) \tag{31}$$

$$S_r = S_t * \tan\alpha \ (radial\ load\ in\ N) \tag{32}$$

$$S = \sqrt{S_t^2 + S_r^2} \tag{33}$$

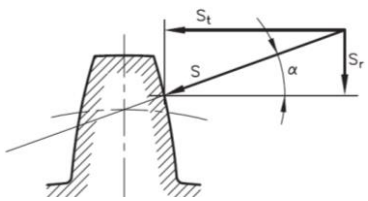

Figure 3-6 Loads exchanged between spur gear wheels.

In the next table there is the summary of all the loads applied to the layshaft.

Layshaft			
	S_t [N]	S_r [N]	S [N]
Primary	1572,41	572,31	1673,33
1st	3040,00	1106,47	3235,10
2nd	2280,00	829,85	2426,33
3rd	1688,89	614,71	1797,28
4th	1520,00	553,23	1617,55
5th	1425,00	518,66	1516,45
6th	1341,18	488,15	1427,25

Table 4 - Gear loads applied to the layshaft.

The lengths of the beam and the positions of the gear wheels are represented in the following figure:

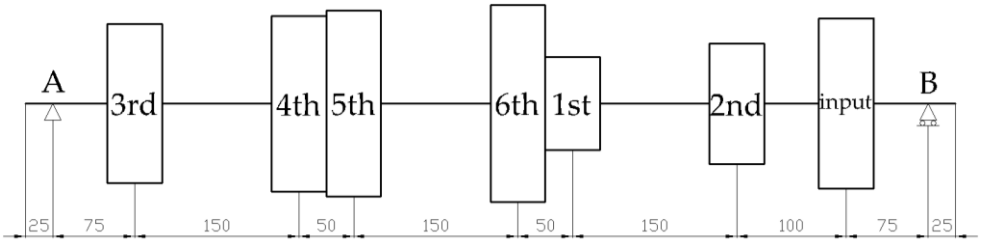

Figure 3-7 Layshaft sketch.

Studying as an example the case that the 1st gear is engaged, the other gears cases are very similar to this one it changes only the position of S that always remains between the bearing A and the input load. The beam representation will be as following:

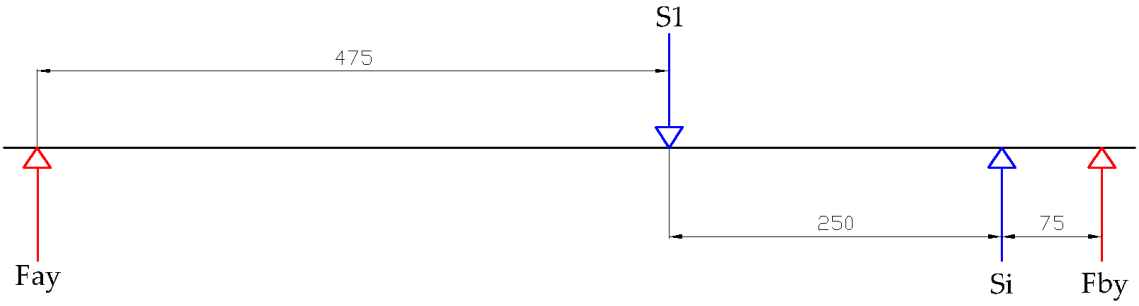

Figure 3-8 Layshaft 1st gear beam representation.

To calculate le bearings loads (F_{ay} and F_{by}) is enough to perform a beam analysis, the following equations are going to show the generic approach for this kind of load configuration:

$$\begin{cases} F_{by} = \dfrac{(-S_i * l_{ia}) + (S_x * l_{xa})}{l_{ab}} \\ F_{ay} = S_x - S_i - F_{by} \end{cases} \tag{34}$$

l_{ia} is the distance between the input load and the bearing A; l_{xa} is the distance between the gear load and the bearing A; l_{ab} is the distance between the two bearings; S_x is the gear load and S_i is the input load.

In the project folder *Trasmission\Gearbox\Shafts\Python\Lay_shaft*, there is Python script called *Lay_shaft.py* that it analyzes every gear case and they plot the shear chart and the bending moment chart.

Following there is the analysis of the 1st gear case, that is represented in Figure 3-8:

$$\begin{cases} F_{by} = \dfrac{(-1673{,}33 * 725) + (3235{,}10 * 475)}{800} \cong 404{,}38\ [N] \\ F_{ay} = 3235{,}10 - 1673{,}33 - 404{,}38 \cong 1157{,}38\ [N] \end{cases} \tag{35}$$

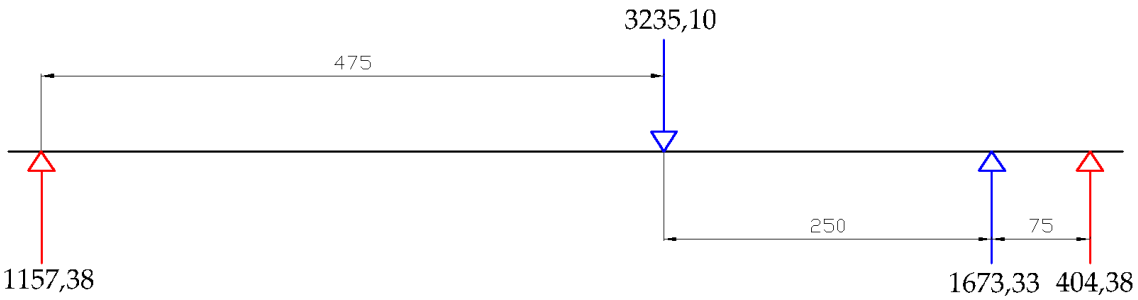

Figure 3-9 Layshaft 1st gear final configuration.

The shear chart, the bending moment chart and the torque chart are subsequent:

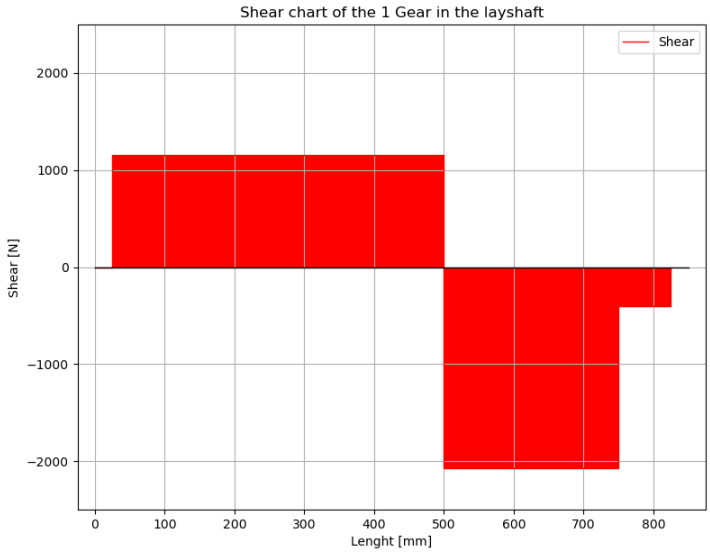

Figure 3-10 Shear chart 1st gear – layshaft.

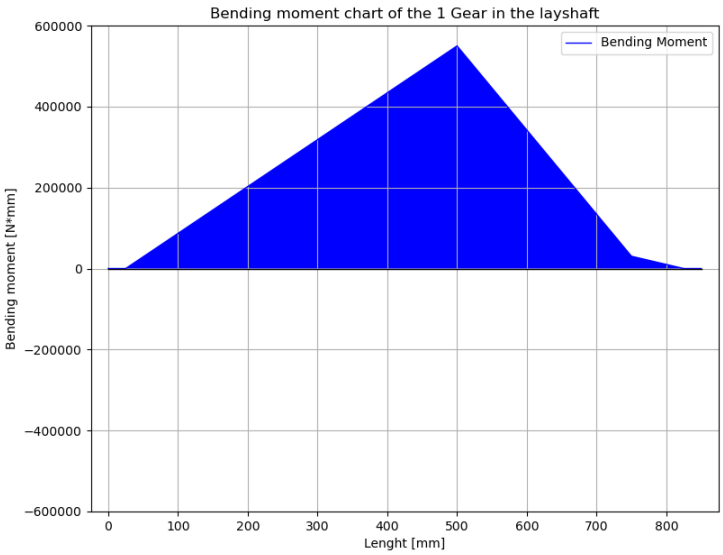

Figure 3-11 Bending moment chart 1st gear – layshaft.

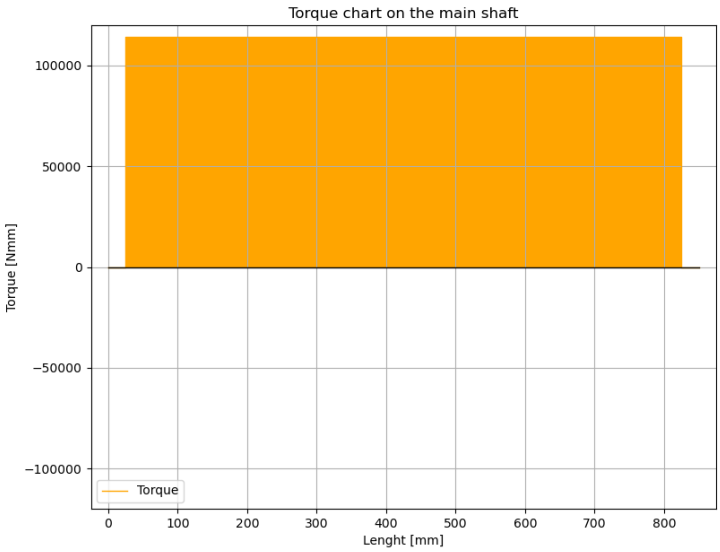

Figure 3-12 Torque chart 1st gear – layshaft.

From these charts it is possible to design the layshaft evaluating the minimum section diameters that the shaft needs to have, from them it is noticed that the situation in the input gear wheel and in the 1st gear wheel are really different and the magnitude of both shear and bending moment in the 1st gear wheel are much higher, so the minimum diameter will be evaluated from that section ($l = 500\ [mm]$ and $M_b = 549757{,}73\ [N * mm]$).
This shaft transmits torque and, at the same time, not negligible bending moments consequently the sizing needs to be done by flexion-torsion, so the first step is to calculate the ideal bending moment M_{bi}:

$$M_{bi} = \sqrt{M_b^2 + 0{,}75 * T^2} = \sqrt{549757{,}73^2 + 0{,}75 * 114000^2} \cong 558552{,}2\ [N * mm] \tag{36}$$

From the equation of the section modulus of a circular section, it is possible to obtain the minimum diameter:

$$d = \sqrt[3]{\frac{32 * M_{bi}}{\pi * \sigma_{adm,f}}} \tag{37}$$

Having $\sigma_{adm,f} = \frac{1}{3} * \frac{\sigma_U}{X} = \frac{1}{3} * \frac{900}{2} = 150\ [MPa]$, where σ_U is the ultimate strength in MPa of the steel C60 and X is a safety factor, so now d is equal to:

$$d = \sqrt[3]{\frac{32 * 558552{,}2}{\pi * 150}} \cong 33{,}59\ [mm] \tag{38}$$

Evaluating all the other cases, the minimum diameters in the same section are:

Gear case	D [mm]
1st	33,59
2nd	25,83
3rd	21,58
4th	25,59
5th	25,72
6th	25,91

Table 5 - Minimum layshaft diameter per each gear case.

The middle section of the layshaft needs to be at least 34 mm, picking the subsequent integer number of the highest value among all the minimum diameters indicated in Table 5.
Another consideration is how to join the gear wheels to the layshaft, to do so, keys are used, so the diameter of the layshaft must be increased more in order to satisfy that the minimum diameter is 34, explained in the following figure:

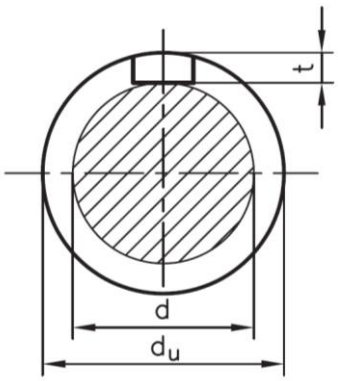

Figure 3-13 Section with keyway representation.

From the ISO R773, the key can be selected:

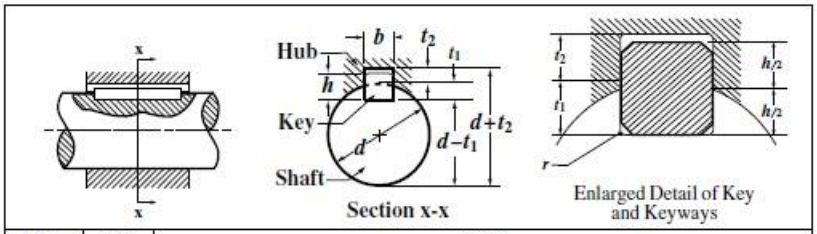

Shaft		Key	Keyway											
Nominal Diameter d			Width b						Depth				Radius r	
				Free Fit		Normal Fit		Close Fit	Shaft t_1		Hub t_2			
Over	Up to and Incl	Size, $b \times h$	Nominal	Shaft (H9)	Hub (D10)	Shaft (N9)	Hub (J_S9)[a]	Shaft and Hub (P9)	Nominal	Tolerance	Nominal	Tolerance	Max.	Min.
				Tolerances										
Keyways for Square Parallel Keys														
6	8	2 × 2	2	+0.025 0	+0.060 +0.020	−0.004 −0.029	+0.012 −0.012	−0.006 −0.031	1.2	+0.1 0	1	+0.1 0	0.16	0.08
8	10	3 × 3	3						1.8		1.4		0.16	0.08
10	12	4 × 4	4	+0.030 0	+0.078 +0.030	0 −0.030	+0.015 −0.015	−0.012 −0.042	2.5		1.8		0.16	0.08
12	17	5 × 5	5						3		2.3		0.25	0.16
17	22	6 × 6	6						3.5		2.8		0.25	0.16
Keyways for Rectangular Parallel Keys														
22	30	8 × 7	8	+0.036 0	+0.098 +0.040	0 −0.036	+0.018 −0.018	−0.015 −0.051	4	+0.2 0	3.3	+0.2 0	0.25	0.16
30	38	10 × 8	10						5		3.3		0.40	0.25
38	44	12 × 8	12	+0.043	+0.120 +0.050	0 −0.043	+0.021 −0.021	−0.018 −0.061	5		3.3		0.40	0.25
44	50	14 × 9	14						5.5		3.8		0.40	0.25
50	58	16 × 10	16						6		4.3		0.40	0.25
58	65	18 × 11	18						7		4.4		0.40	0.25
65	75	20 × 12	20	+0.052	+0.149 +0.065	0 −0.052	+0.026 −0.026	−0.022 −0.074	7.5		4.9		0.60	0.40
75	85	22 × 14	22						9		5.4		0.60	0.40
85	95	25 × 14	25						9		5.4		0.60	0.40
95	110	28 × 16	28						10		6.4		0.60	0.40
110	130	32 × 18	32	+0.062	+0.180 −0.080	0 −0.062	+0.031 −0.031	−0.026 −0.088	11		7.4		0.60	0.40
130	150	36 × 20	36						12	+0.3 0	8.4	+0.3 0	1.00	0.70
150	170	40 × 22	40						13		9.4		1.00	0.70
170	200	45 × 25	45						15		10.4		1.00	0.70
200	230	50 × 28	50						17		11.4		1.00	0.70
230	260	56 × 32	56	+0.074	+0.220 +0.100	0 −0.074	+0.037 −0.037	−0.032 −0.106	20		12.4		1.60	1.20
260	290	63 × 32	63						20		12.4		1.60	1.20
290	330	70 × 36	70						22		14.4		1.60	1.20
330	380	80 × 40	80						25		15.4		2.50	2.00
380	440	90 × 45	90	+0.087 0	+0.260 +0.120	0 −0.087	+0.043 −0.043	−0.037 −0.124	28		17.4		2.50	2.00
440	500	100 × 50	100						31		19.5		2.50	2.00

[a] Tolerance limits J_S9 are quoted from BS 4500, "ISO Limits and Fits," to three significant figures.

All dimensions in millimeters.

Figure 3-14 ISO R773 [8].

The minimum diameter is between 30 and 38 mm, so the keyway depth is 5, consequently remembering that the minimum diameter is 34 mm means that the external diameter must be at least 39 mm but in doing so the diameter no longer falls within the range 30 - 38 mm, then the selection must be within the range 38 - 44 mm, here the keyway depth is always 5, therefore the selection of an external diameter equal to 40 mm satisfies all the required requirements.
All the dimensions related to the key are summarized in the following table:

d	40 mm
b	12 mm
h	8 mm
t1	5 mm
t2	3,3 mm

Table 6 - Key dimensions.

Now it is necessary to define the diameters at the ends of the shaft, where the bearings will be housed, these diameters depend from the bearings but due to the fact that the loads are not so high the bearings will be small.
It is not good to have a very huge difference between the diameters because there are some design rules to respect, such as that the increase of the diameter, or decreasing of it, between two consecutive section needs to be maximum 20%, using an equation if there is an increasing of the diameter:

$$d_2 \leq d_1 * 1{,}2 \tag{39}$$

Where d_1 is the diameter of the previous section and d_2 is the consegutive diameter.
The diameter selected to the ends is equal to 22 mm, so the bearings now can be selected, going through the SKF website it is possible to visualize the bearings catalogue, here what is needed are radial ball bearings with the internal diameter equal to 22 mm, since the loads have only the radial component and the rotational speed is high, and from that list the Bearing SKF 62/22 it is selected with the following characteristics:

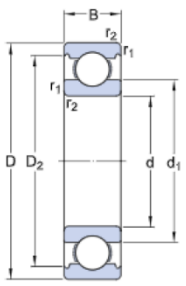

DIMENSIONS

d	22 mm
D	50 mm
B	14 mm
	≈ 32.2 mm
	≈ 44 mm
	min. 1 mm

Figure 3-15 SKF 62/22 Technical specification [9].

Once selected the bearings they need to be verified, a python script called *Bearings_lay_shaft.py* is present inside the project folder *Trasmission\Gearbox\Bearings\Python* an it performs this operation.
The first operation is to calculate the millions of revolutions that the bearing needs to perform at least before it needs to be replaced, so after 50 hours, (with 10 percent of failure), the equation is equal to:

$$L_{10} = \frac{n_{layshaft} * h * 60}{1000000} = \frac{\frac{13000}{1{,}8125} * 50 * 60}{1000000} \cong 21{,}52 \text{ [mln of revolutions]} \tag{40}$$

Assuming that the speed of the layshaft is constant with the maximim speed (to have the worst case possible), the most important variable to look at becomes the bearing load and the 3rd gear has the highest loads in magnitude and in particular F_{ay} ($F_{ay} = 1{,}47191\ [kN]$).
Now, the basic dynamic load rating C needs to be evaluated:

$$C = \sqrt[3]{L_{10}} * F_{ay} = \sqrt[3]{21{,}52} * 1{,}47191 \cong 4{,}1\ [kN] \tag{41}$$

The basic dynamic load rating of the SKF 62/22 bearing is equal to 14 $[kN]$ so the bearing can operate in both ends of the shaft without any problem.
Now everything is defined and the final technical drawing of the layshaft can be found in the project folder *Trasmission\Gearbox\Shafts\Creo\Lay_shaft*.

3.1.1.3 Mainshaft

The mainshaft design is similar to the layshaft design, paragraph 3.1.1.2, where the equations are already explained so they will not be explained again but used directly.
The loads applied on the main shaft from the spur gear wheels are defined as the equations (30), (31) and (32), but those from the bevel gear wheels they are slightly different:

$$S_t = \frac{2 * T}{d_m}\ (tangential\ load\ in\ N) \tag{42}$$

$$S_r = S_t * \tan\alpha * \cos\delta\ \ (radial\ load\ in\ N) \tag{43}$$

$$S_a = S_t * \tan\alpha * \sin\delta\ \ (axial\ load\ in\ N) \tag{44}$$

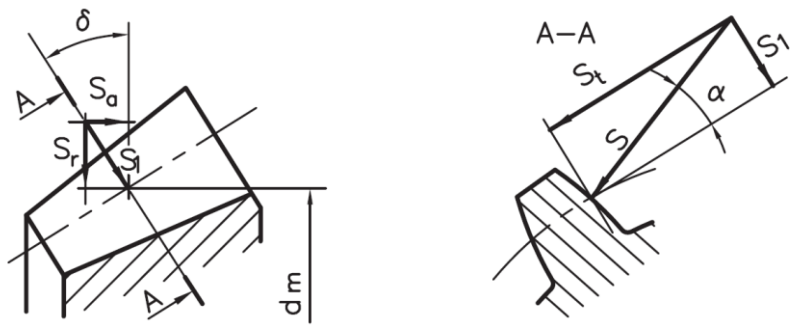

Figure 3-16 Loads exchanged between bevel gear wheels.

The loads applied on the mainshaft from the bevel gear wheels are $S = \sqrt{S_t^2 + S_r^2}$ and S_a, in the next table there is the summary of all the loads applied to the mainshaft from all the gear wheels:

Mainshaft		
	S_a [N]	S [N]
1st	0	1347,96
2nd	0	1565,37
3rd	0	2021,94
4th	0	2310,79
5th	0	2554,03
6th	0	2854,50
Differential	253,35	2729,14

Table 7 - Gear loads applied to the layshaft.

The lengths of the beam and the positions of the gear wheels are represented in the following figure:

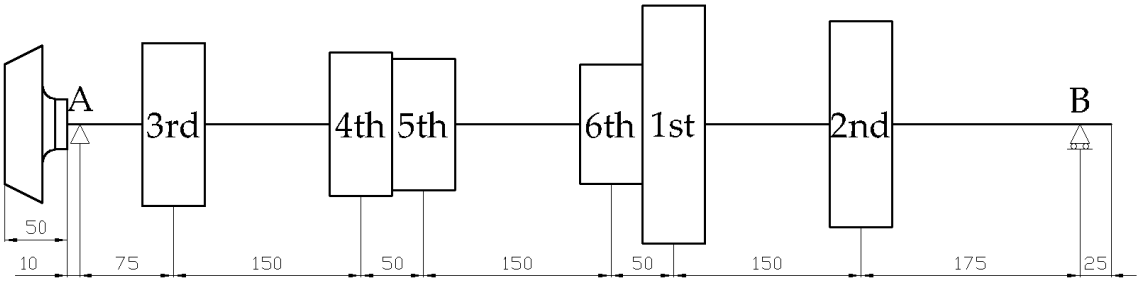

Figure 3-17 Mainshaft sketch.

As in the paragraph 3.1.1.2, the example case is when the 1st gear is engaged, the other gears cases are similar as the case of the layshaft indeed the position of S is always between the bearings but in this case, compared to the previous one, there is not input load but there are two loads (both radial and axial) from bevel gear in the other side of the beam.
The beam representation will be as following:

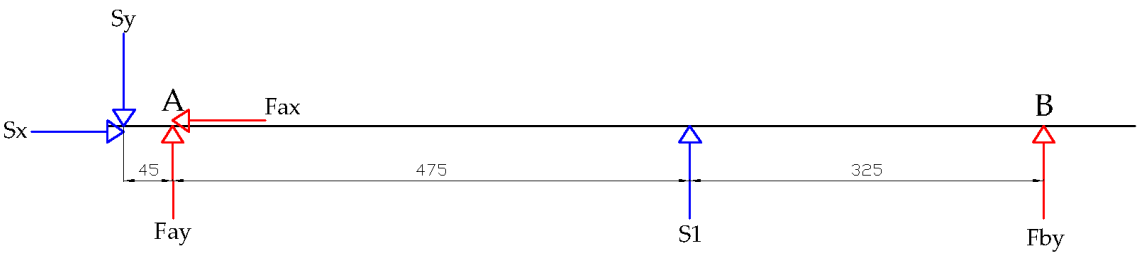

Figure 3-18 Mainshaft 1st gear beam representation.

S_x and S_y are the loads from the bevel gear wheel while S_1 is from the 1st spur gear and in A, due to the fact that the bevel gear wheel is providing an axial load, there is a necessity to insert an angular bearing.
Again, as it was for the layshaft, to calculate le bearings loads (F_{ax}, F_{ay} and F_{by}) is enough to perform a beam analysis, the following equations are going to show the generic approach for this kind of load configuration:

$$\begin{cases} F_{by} = \dfrac{(-S_i * l_{ia}) + (-S_y * l_{oa})}{l_{ab}} \\ F_{ay} = S_y - S_i - F_{by} \\ F_{ax} = S_x \end{cases} \tag{45}$$

l_{ia} is the distance between the spur gear load and the bearing A; l_{oa} is the distance between the bevel gear load and the bearing A and l_{ab} is the distance between the two bearings.
So for the 1st gear, represented in Figure 3-18, the numerical procedure is:

$$\begin{cases} F_{by} = \dfrac{(-1347{,}96 * 475) + (-2729{,}14 * 45)}{800} \cong -953{,}86\ [N] \\ F_{ay} = 2729{,}14 - 1347{,}96 - (-953{,}86) \cong\ 2335{,}04\ [N] \\ F_{ax} \cong 253{,}35\ [N] \end{cases} \tag{46}$$

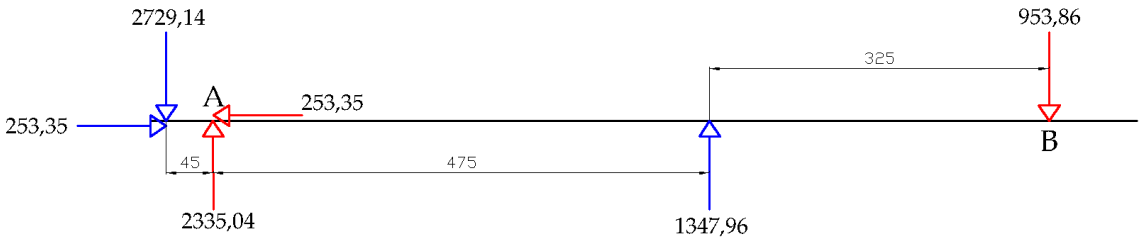

Figure 3-19 Mainshaft 1st gear final configuration.

The shear chart, the bending moment chart, the traction chart and the torque chart are subsequent:

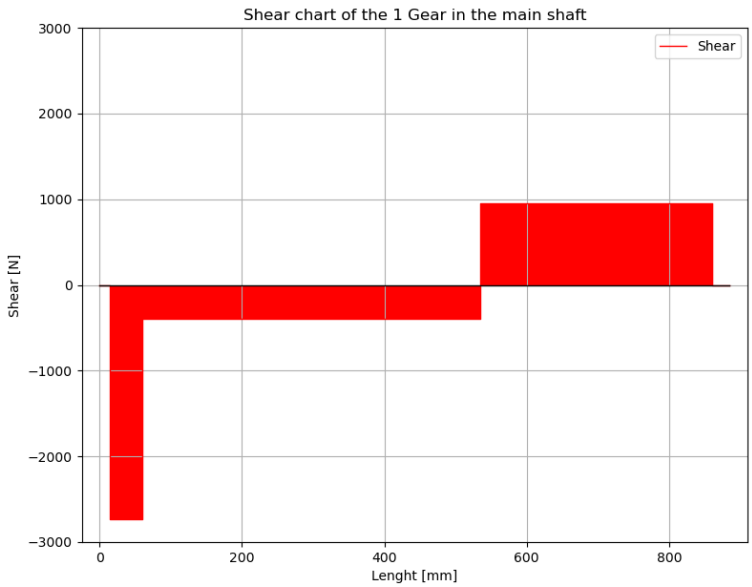

Figure 3-20 Shear chart 1st gear – mainshaft.

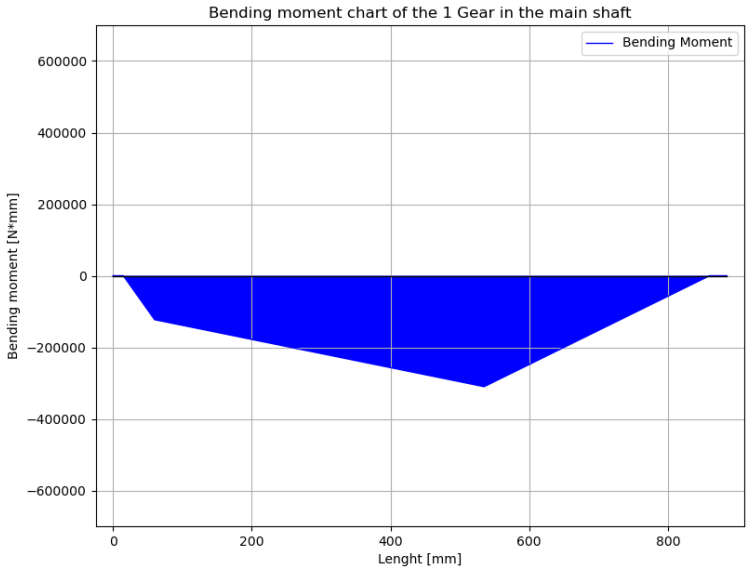

Figure 3-21 Bending moment chart 1st gear – mainshaft.

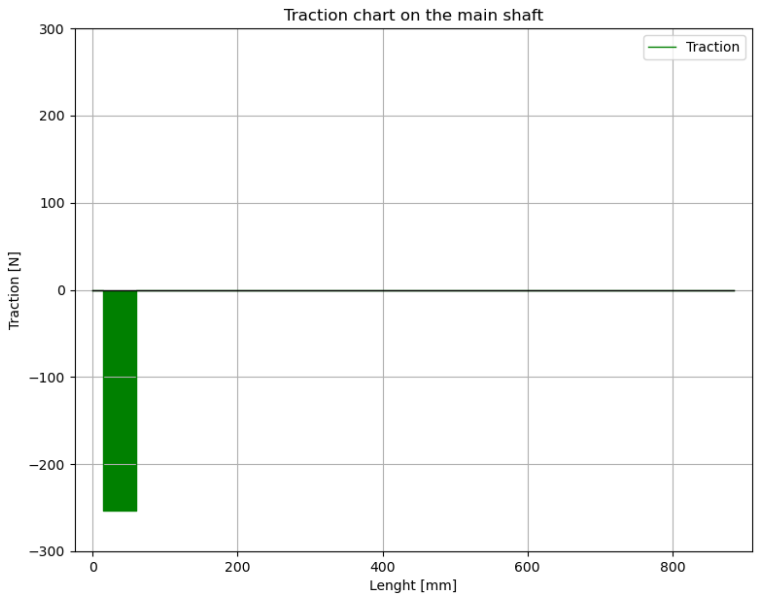

Figure 3-22 Traction chart 1st gear – mainshaft.

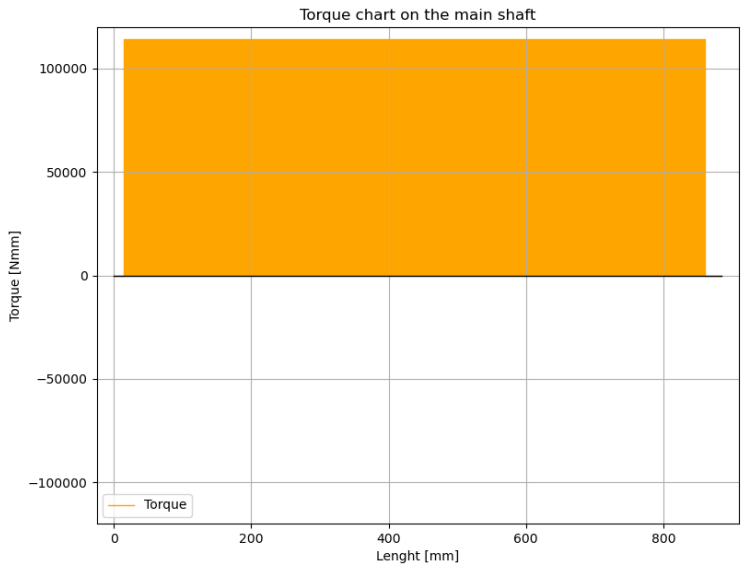

Figure 3-23 Torque chart 1st gear – mainshaft.

As already explained in paragraph 3.1.1.2, from these charts it is possible to extract data in order to design the mainshaft evaluating the minimum sections diameters that the shaft needs to have.

The critical sections are located in the bearing A and where is installed the spur gear. The mainshaft, similar the layshaft case, transmits torque and not negligible bending moments at the same time so the sizing is done by flexion-torsion.

The calculation of the ideal bending moment M_{bi} in the spur gear section is displayed here:

$$M_{bi} = \sqrt{M_b^2 + 0{,}75 * T^2} = \sqrt{310005{,}99^2 + 0{,}75 * 114000^2} \cong 325347{,}07\ [N * mm] \tag{47}$$

From the equation of the section modulus of a circular section, it is possible to obtain the minimum diameter:

$$d = \sqrt[3]{\frac{32 * M_{bi}}{\pi * \sigma_{adm,f}}} \tag{48}$$

Having $\sigma_{adm,f} = \frac{1}{3} * \frac{\sigma_U}{X} = \frac{1}{3} * \frac{900}{2} = 150\ [MPa]$, where σ_U is the ultimate strength in MPa of the steel C60 and X is a safety factor, so now d is equal to:

$$d = \sqrt[3]{\frac{32 * 325347{,}07}{\pi * 150}} \cong 28{,}06\ [mm] \tag{49}$$

With the same procedure, the minimum section diameter in the bearing A area can be evaluated, being that in every case the bending moment is always the same, the value is always equal to:

$$M_{bi} = \sqrt{M_b^2 + 0{,}75 * T^2} = \sqrt{122811{,}39^2 + 0{,}75 * 114000^2} \cong 157574{,}23\ [N * mm] \tag{50}$$

$$d = \sqrt[3]{\frac{32 * M_{bi}}{\pi * \sigma_{adm,f}}} = \sqrt[3]{\frac{32 * 157574{,}23}{\pi * 150}} \cong 22{,}03\ [mm] \tag{51}$$

Evaluating all the other cases, the minimum diameters in the spur gear section are:

Gear case	D [mm]
1st	28,06
2nd	26,05
3rd	26,29
4th	31,77
5th	33,43
6th	35,04

Table 8 - Minimum mainshaft diameter per each gear case in the spur gear section.

Unlike the layshaft, in this case, a the middle section of the mainshaft needs to be with a straight-sided spline section, it must be designed following the ISO 14-82, showed in the following figure:

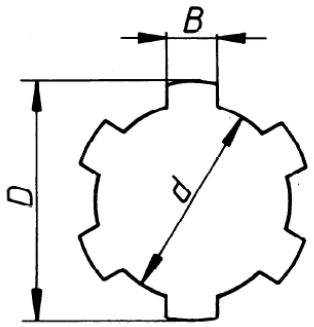

d mm	Light series				Medium series			
	Designation	N	D mm	B mm	Designation	N	D mm	B mm
11					6 × 11 × 14	6	14	3
13					6 × 13 × 16	6	16	3,5
16					6 × 16 × 20	6	20	4
18					6 × 18 × 22	6	22	5
21					6 × 21 × 25	6	25	5
23	6 × 23 × 26	6	26	6	6 × 23 × 28	6	28	6
26	6 × 26 × 30	6	30	6	6 × 26 × 32	6	32	6
28	6 × 28 × 32	6	32	7	6 × 28 × 34	6	34	7
32	8 × 32 × 36	8	36	6	8 × 32 × 38	8	38	6
36	8 × 36 × 40	8	40	7	8 × 36 × 42	8	42	7
42	8 × 42 × 46	8	46	8	8 × 42 × 48	8	48	8
46	8 × 46 × 50	8	50	9	8 × 46 × 54	8	54	9
52	8 × 52 × 58	8	58	10	8 × 52 × 60	8	60	10
56	8 × 56 × 62	8	62	10	8 × 56 × 65	8	65	10
62	8 × 62 × 68	8	68	12	8 × 62 × 72	8	72	12
72	10 × 72 × 78	10	78	12	10 × 72 × 82	10	82	12
82	10 × 82 × 88	10	88	12	10 × 82 × 92	10	92	12
92	10 × 92 × 98	10	98	14	10 × 92 × 102	10	102	14
102	10 × 102 × 108	10	108	16	10 × 102 × 112	10	112	16
112	10 × 112 × 120	10	120	18	10 × 112 × 125	10	125	18

Figure 3-24 ISO 14-82 [11].

Being the maximum value of the minimum diameter is equal to 35,04 mm (Table 8), observing Figure 3-24, the first standard value suitable is 36 mm so selecting the light series the following dimensions can be picked:

d	36 mm
D	40 mm
B	7 mm
N	8

Table 9 - Straight-sided spline dimensions.

Knowing the minimum diameter of the shaft section in correspondence of the bearing A, the bearing can be selected and verified. The bearing A, having the axial load, must be a tapered roller bearing with a diameter at least 22 mm.
The selection of the tapered roller bearing is similar to the deep groove ball bearing one, the example case is going to be used the 2nd gear because it has the highest loads on the bearing A, that they are equal to:

$$F_{ay} = 2{,}54023\ [kN];\ F_{ax} = 0{,}25335\ [kN] \tag{52}$$

About the rotational speed of the mainshaft is equivalent to:

$$n_{mainshaft} = \frac{n_{engine}}{gear\ ratio_{2nd}} = \frac{13000}{2{,}809375} \cong 4627{,}36\ [rpm] \tag{53}$$

The total load applied on the bearing is:

$$F_a = \sqrt{{F_{ay}}^2 * {F_{ax}}^2} = \sqrt{2{,}54023^{\ 2} + 0{,}25335^2} \cong 2{,}5528\ [kN] \tag{54}$$

Using the equation (40) it is possible to calculate the number of revolutions that the bearing needs to support for the minimum hours of service required:

$$L_{10} = \frac{n_{mainshaft} * h * 60}{1000000} = \frac{4627{,}36\ * 50 * 60}{1000000} \cong 13{,}88\ [\text{mln of revolutions}] \tag{55}$$

In this case, the speed of the mainshaft is not constant but it is assumed that it is always rotating at the maximum speed to have the worst scenario possible.
Assuming what it is described before, the basic dynamic load rating C needs to be evaluated using the equation (41) moreover remembering that this bearing is made with rollers and not with balls, the index of the root is not anymore 3 but $^{10}/_{3}$:

$$C = \sqrt[10/3]{L_{10}} * F_a = \sqrt[10/3]{13{,}88} * 2{,}5528 \cong 5{,}62\ [kN] \tag{56}$$

The SKF 320/22 X is the tapered roller bearing selected from C (Basic dynamic load rating) and the technical specifications are displayed in the next figure:

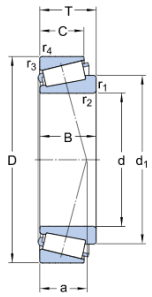

DIMENSIONS

d	22 mm
D	44 mm
T	15 mm
d_1	≈ 34.3 mm
B	15 mm
C	11.5 mm
$r_{1,2}$	min. 0.6 mm
$r_{3,4}$	min. 0.6 mm
a	10.68 mm

Figure 3-25 SKF 320/22 X Technical specification [12].

The basic dynamic load rating of the tapered roller bearing SKF 320/22 X is equal to 30,9 [kN] and its limiting rotational speed is equal to 15000 [rpm], so it is able to support the worst case that it is the 6th gear with 14344,82 [rpm].
Also in the position B needs to be selected and verified the bearing, that is going to be a deep ball bearing; for this bearing the worst case, both in the point of view of load and speed, is the 6th gear, where the load is equal to:

$$F_{by} = 1{,}66996\ [kN] \tag{57}$$

And the mainshaft rotational speed is:

$$n_{mainshaft} = \frac{n_{engine}}{gear\ ratio_{6^{th}}} = \frac{13000}{0{,}90625} \cong\ 14344{,}82\ [rpm] \tag{58}$$

The millions of revolutions performed by the bearing before it needs to be replaced (assuming it is going at the maximum speed all the time), is equivalent to:

$$L_{10} = \frac{n_{mainshaft} * h * 60}{1000000} = \frac{14344{,}82\ \ * 50 * 60}{1000000} \cong 43{,}03\ [\text{mln of revolutions}] \tag{59}$$

As the equation (41), the basic dynamic load rating C is:

$$C = \sqrt[3]{L_{10}} * F_{ay} = \sqrt[3]{43{,}03} * 1{,}66996 \cong 5{,}85\ [kN] \tag{60}$$

As for the layshaft, the Bearing SKF 62/22 respects all the requirement so it can be selected, in the Figure 3-15 there are all the technical specification of it.

Now everything is defined and the final technical drawing of the mainshaft can be found in the project folder *Trasmission\Gearbox\Shafts\Creo\Main_Shaft* and a python script in the project folder *Trasmission\Gearbox\Bearings\Python* called *Bearings_main_shaft.py* performs all these operations.

3.1.1.4 Extra components

Installed with the mainshaft, there are some other extra components that are:

- Hubs;
- Needle roller bearings;
- Deep groove ball bearings;
- Selectors.

The *hub* is a longitudinally drilled cylinder with the same straight-sided spline profile as the mainshaft, where at the ends of the external diameter it acts as a housing for the needle roller bearings and the deep groove ball bearings, while in the middle part present custom straight-sided spline profile that works as a guide for the selector.

There are three different hubs in the gearbox, which only have different section lengths based on the position they will occupy in the shaft, one of them is shown in the following figure:

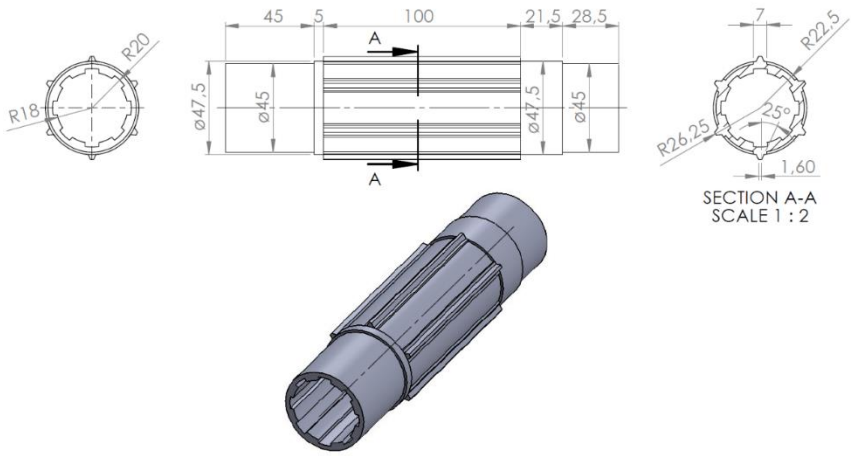

Figure 3-26 Hub 1 - Technical drawing.

All the spur gears on the mainshaft are not directly fixed to it but rotate freely until the selector creates a connection with the mainshaft which subsequently rotates at the same speed as the gear, the procedure with which it occurs will be explained later.

The important point is that all the gear wheels, in the mainshaft, need to have a *needle roller bearings* in order to rotate.

This bearings are located between the hub and the gear wheel, in this case the main challenge to select them is due to the high speed of the 6th gear, not easy to solve because the bearing is quite big in diameter (the internal diameter is equal to 45 mm, see the Figure 3-26). To solve this problem in the first three gears (with a rotational speed lower than 10000 rpm) the needle roller bearing RNAO 45x62x40 is installed (Figure 3-27) while in the rest of the gears is installed the *deep groove ball bearings* SKF 61809-Y (Figure 3-28).

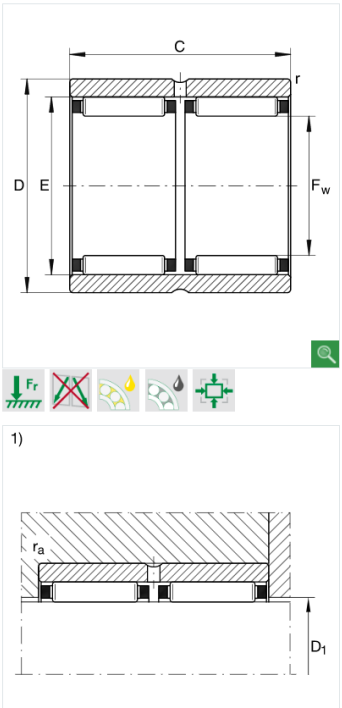

F_w	45 mm	
D	62 mm	
C	40 mm	
D_a	53,5 mm	
D_b	45,6 mm	
d_b	52,2 mm	
E	53 mm	
$r_{a\,max}$	0,3 mm	
r_{min}	0,3 mm	
m	377 g	Mass
C_r	76000 N	Basic dynamic load rating, radial
C_{0r}	135000 N	Basic static load rating, radial
C_{ur}	21900 N	Fatigue limit load, radial
n_G	10000 1/min	Limiting speed
n_{9r}	5900 1/min	Reference speed

Figure 3-27 RNAO 45x62x40 Technical specification [13].

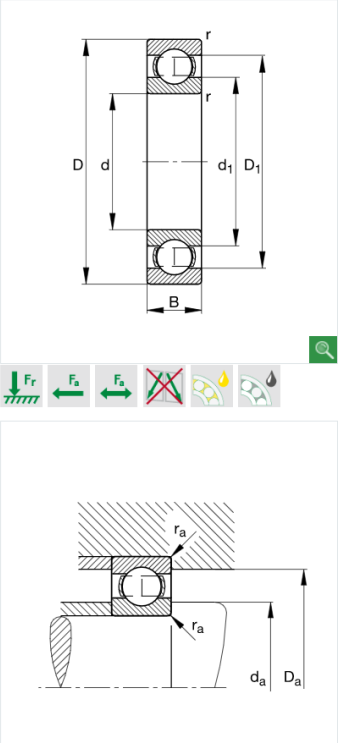

d	45 mm	
D	58 mm	
B	7 mm	
D_1	54,1 mm	
$D_{a\ max}$	56 mm	
d_1	49,1 mm	
$d_{a\ min}$	47 mm	
$r_{a\ max}$	0,3 mm	
r_{min}	0,3 mm	
m	0,039 kg	Mass
C_r	7000 N	Basic dynamic load rating, radial
C_{0r}	5900 N	Basic static load rating, radial
C_{ur}	400 N	Fatigue limit load, radial
n_G	21900 1/min	Limiting speed
n_{0r}	7300 1/min	Reference speed
f_0	16,3	Calculation factor

Figure 3-28 SKF 61809-Y Technical specification [14].

The *selector* slides on the central external toothing of the hub which, activated by a special shaft, allows, through the contact of two lateral teeth one placed on the spur gear while the other on the selector itself, to define which gear wheels are active at that moment. Also for this component, there are three different versions based on the gear wheels with which the component will interact, in the next figure there is the representation of the selector between the 1st and 2nd gear:

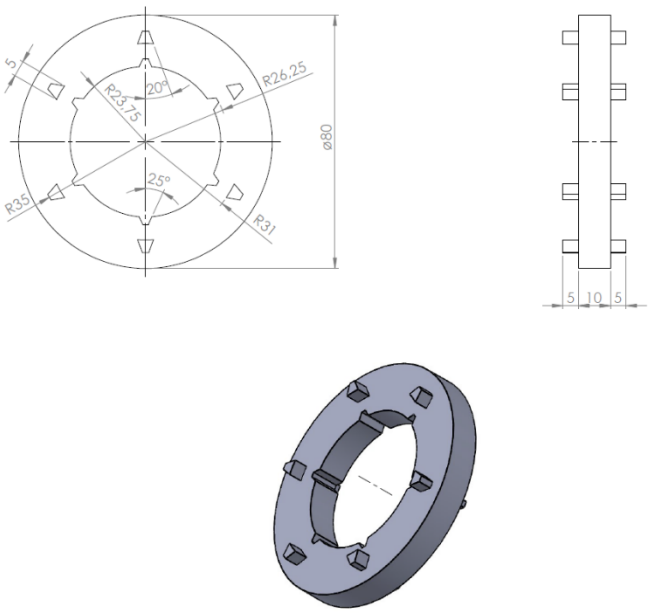

Figure 3-29 Disk 1st - 2nd - Technical drawing.

3.1.2 Finite element analysis

In this paragraph there are some example case showing the stress analysis and deformation analysis.

3.1.2.1 Layshaft

The example case here is the 1st gear, as already studied in the paragraph 3.1.1.2.

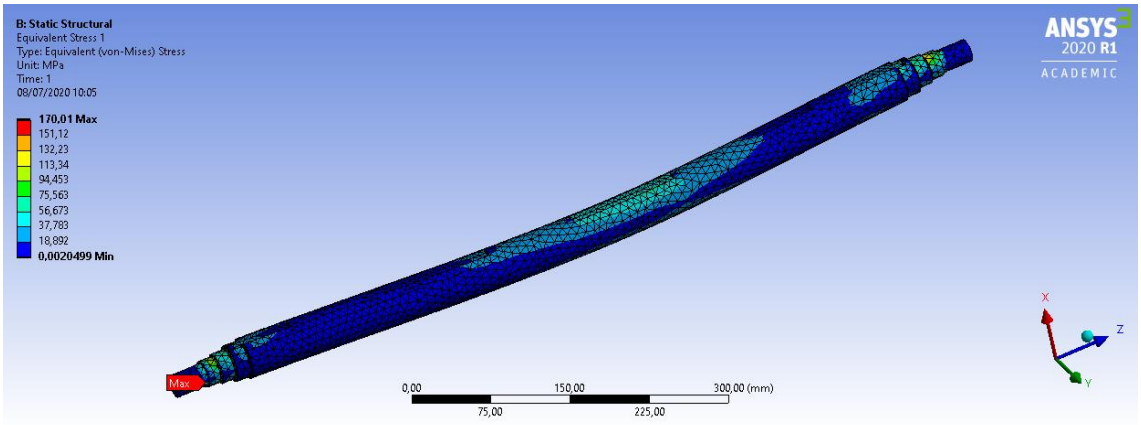

Figure 3-30 Stress analysis - Layshaft (1st gear).

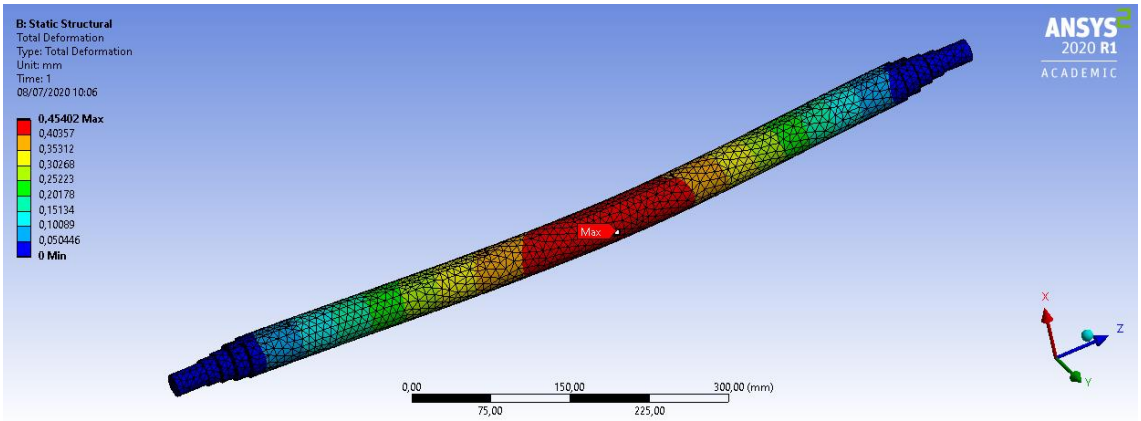

Figure 3-31 Deformation analysis - Layshaft (1st gear).

In the next table is represented the maximum stress and the maximum displacement in each gear:

Layshaft		
	Stress [Mpa]	Displacement [mm]
1st	170,01	0,226
2nd	71,598	0,077
3rd	78,666	0,014
4th	117,48	0,076
5th	111,77	0,086
6th	83,335	0,093

Table 10 - Stress and displacement in the Layshaft.

3.1.2.2 Mainshaft

Also in this shaft the example case is the 1st gear, as already studied in the paragraph 3.1.1.3.

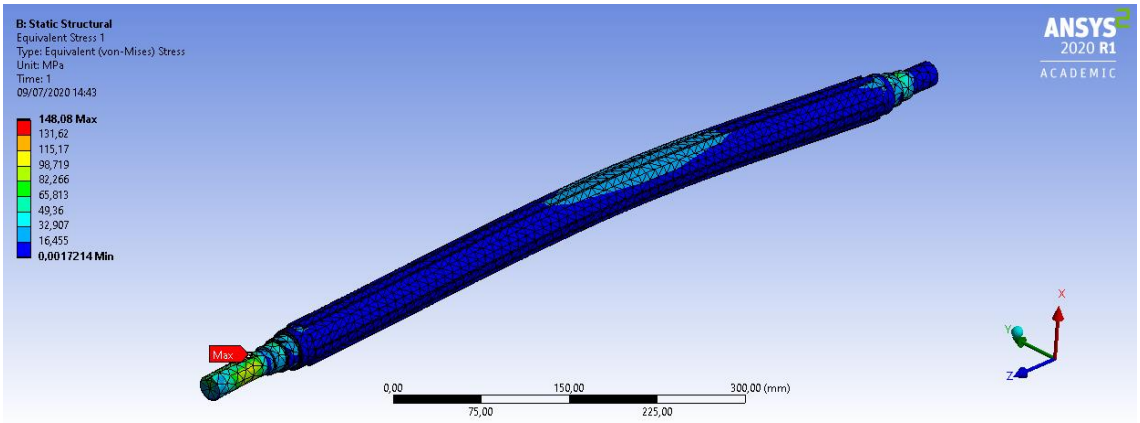

Figure 3-32 Stress analysis - Mainshaft (1st gear).

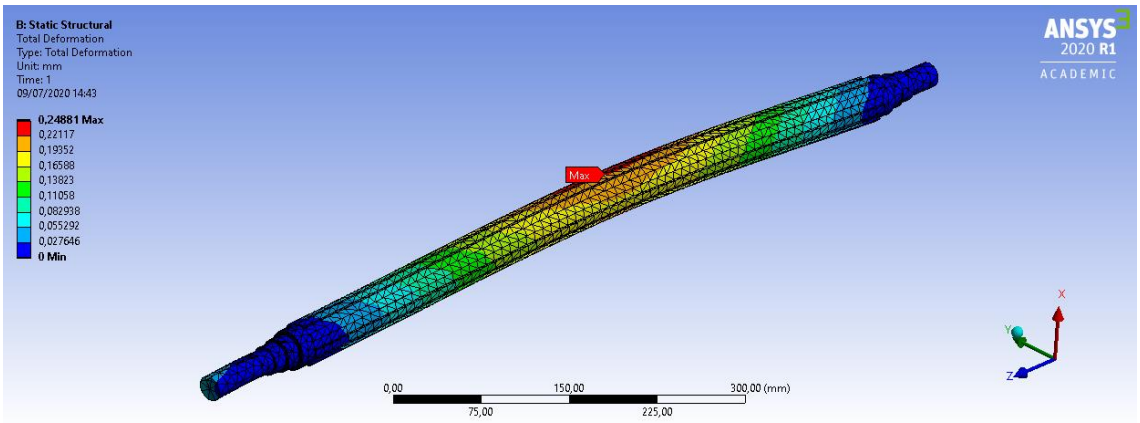

Figure 3-33 Deformation analysis - Mainshaft (1st gear).

In the next table is represented the maximum stress and the maximum displacement in each gear:

Mainshaft		
	Stress [Mpa]	Displacement [mm]
1st	148,08	0,248
2nd	148,01	0,160
3rd	148,10	0,073
4th	148,26	0,296
5th	148,30	0,392
6th	148,27	0,522

Table 11 - Stress and displacement in the Mainshaft.

3.1.3 Overview

In the next figure there is an overview of all the components inside the gearbox:

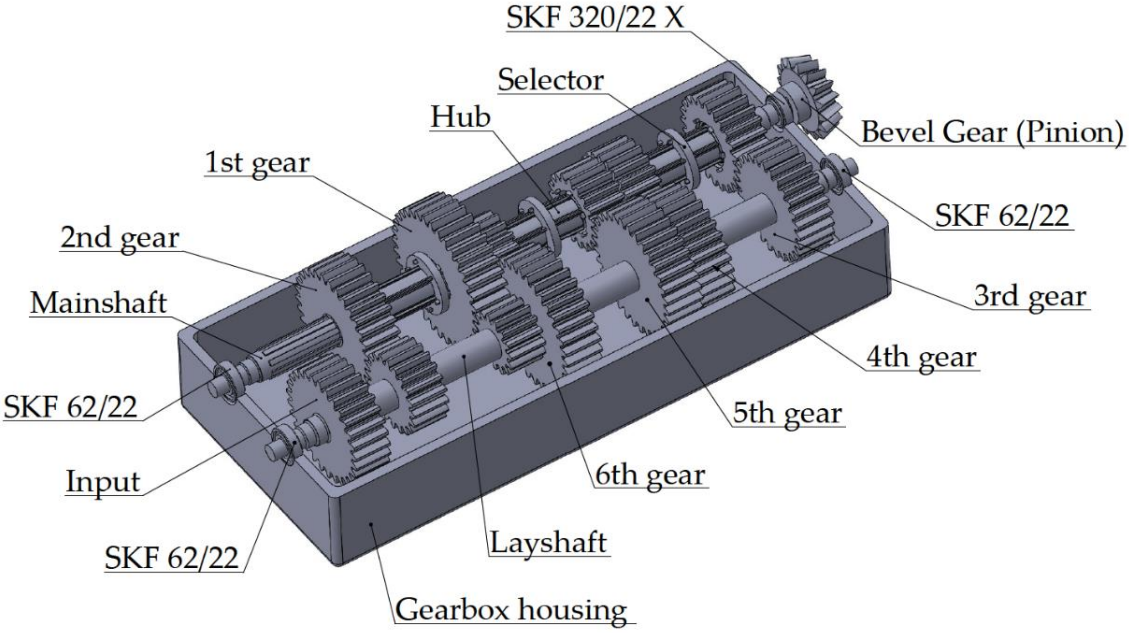

Figure 3-34 Gearbox overview.

3.2 Differential

An open differential is installed in the vehicle.
In the project folder *Trasmission\Open Differential\Python*, two python scripts called *Axle_shaft.py* and *Bearings.py* perform all the different operations that are explained in the following paragraphs.

3.2.1 Design

In this paragraph is described the design of the axle shaft and the selection of the bearings, the design of the bevel gears (Pionion gear and Ring gear) are already explained in the paragraph 3.1.1.1.2.

The core of the differential is compose with 4 Miter Gears KHK SMA4 25, with a gear ratio equal to 1, the gear wheel is represented in Figure 3-35:

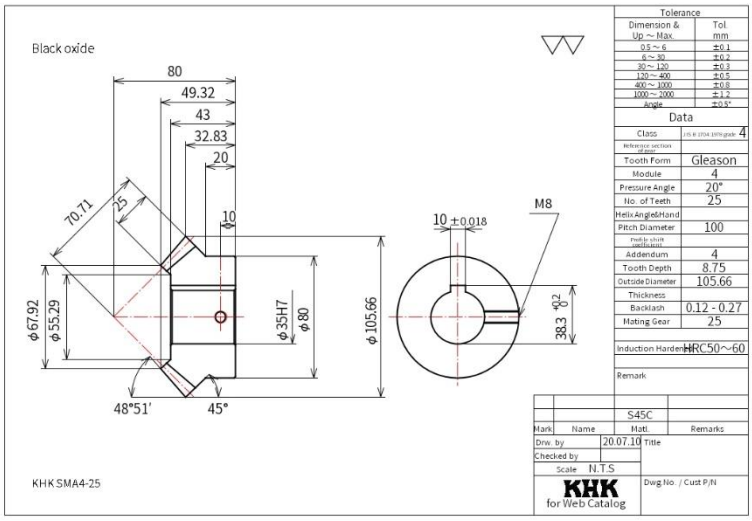

Figure 3-35 Miter Gears KHK SMA4 25 [17].

The differential can be divided into two parts (*Differential side* and *Shaft side*), the *Differential side* is more stressed so it will be the study case used to perform the design and the solution found will be applied also in the S*haft side* (Figure 3-36).

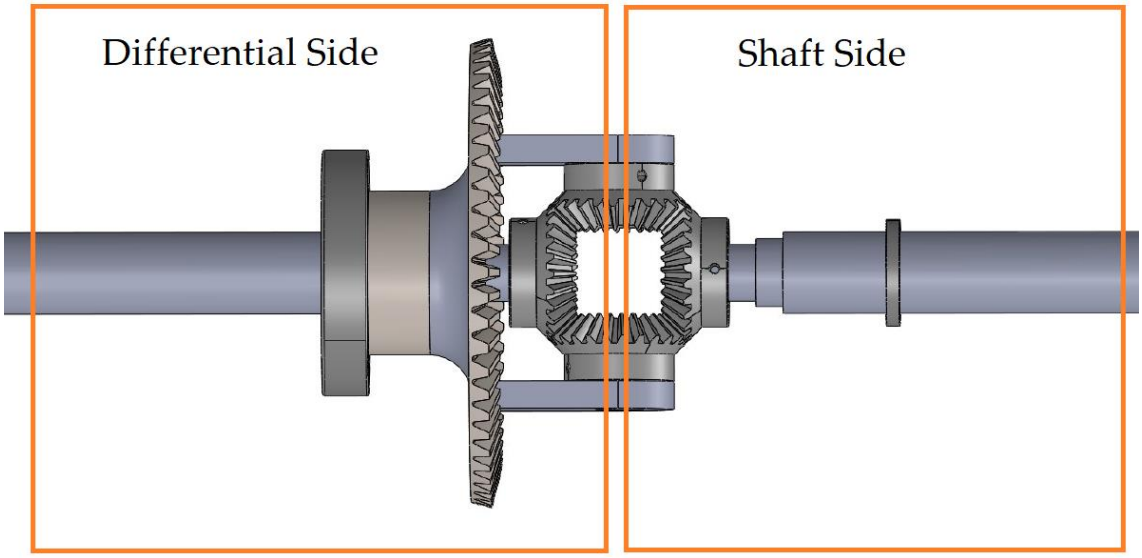

Figure 3-36 Differentil Side / Shaft Side.

To simplify the study case, the loads from the Ring gear are directly applied on the axle shaft (the shaft where the wheels are connected), so the beam is represented as follows:

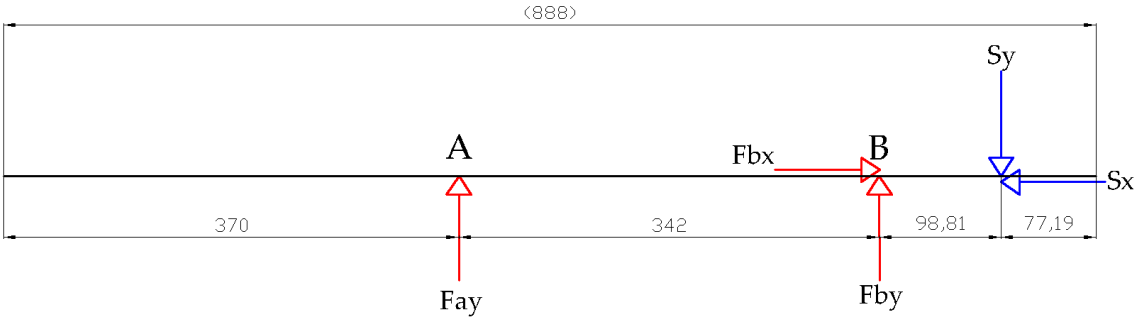

Figure 3-37 Axle shaft beam representation.

S_x and S_y are the loads from the Ring gear while F_{ay}, F_{bx} and F_{by} are bearings loads; the beam analysis equations are the following:

$$\begin{cases} F_{ay} = -\dfrac{S_y * 98{,}81}{342} = -\dfrac{726{,}46 * 98{,}81}{342} \cong -209{,}89\ [N] \\ F_{by} = S_y - F_{ay} = 726{,}46 - (-209{,}89) \cong 936{,}35\ [N] \\ F_{bx} = S_x \cong 253{,}35\ [N] \end{cases} \tag{61}$$

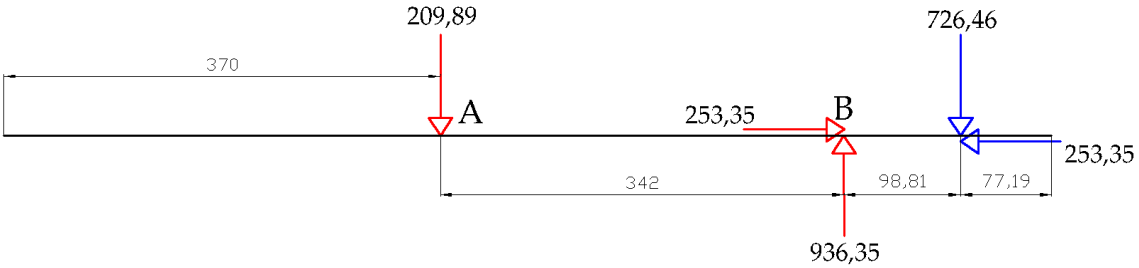

Figure 3-38 Axle shaft configuration - (Differential side).

The shear chart, the bending moment chart, the traction chart and the torque chart are subsequent:

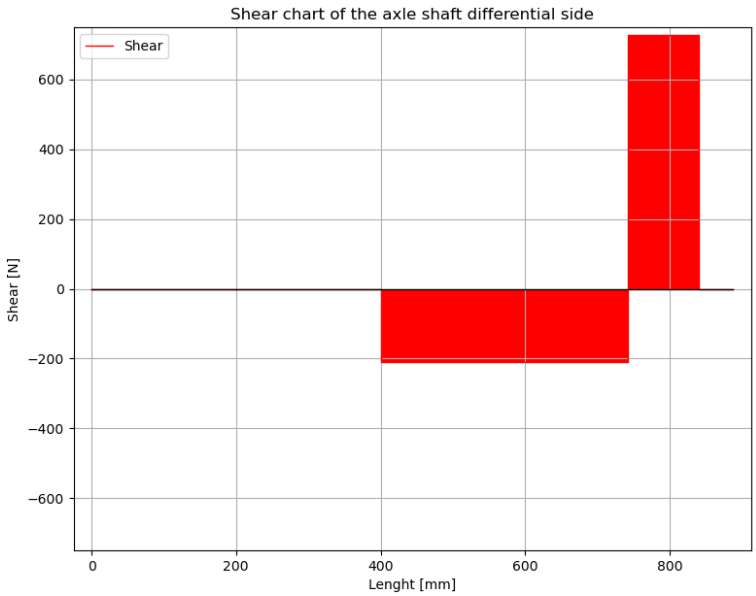

Figure 3-39 Shear chart axle shaft - (Differential side).

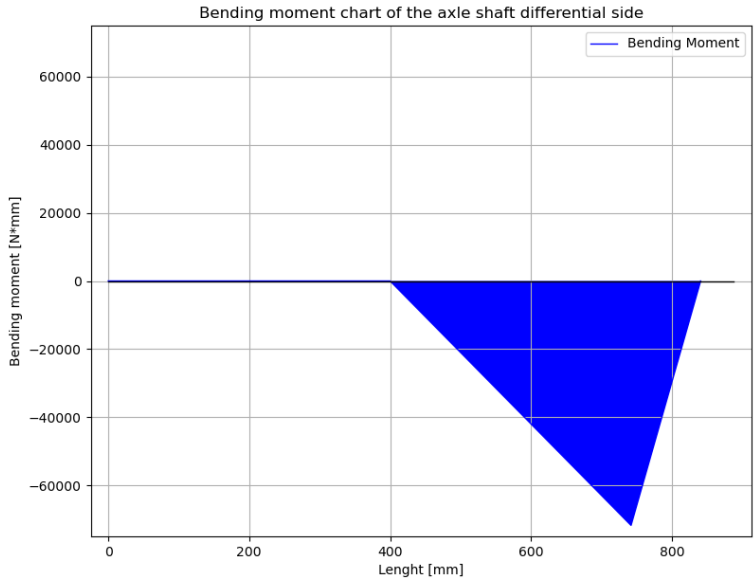

Figure 3-40 Bending moment chart axle shaft - (Differential side).

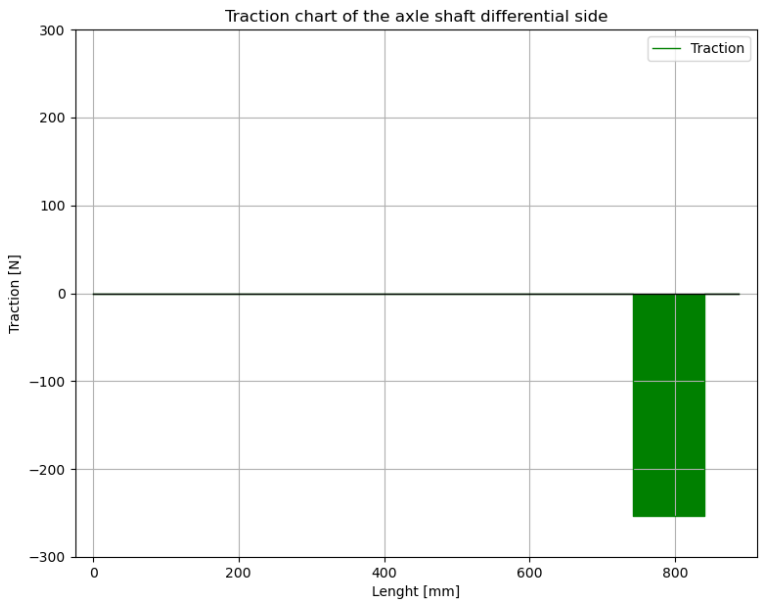

Figure 3-41 Traction chart axle shaft - (Differential side).

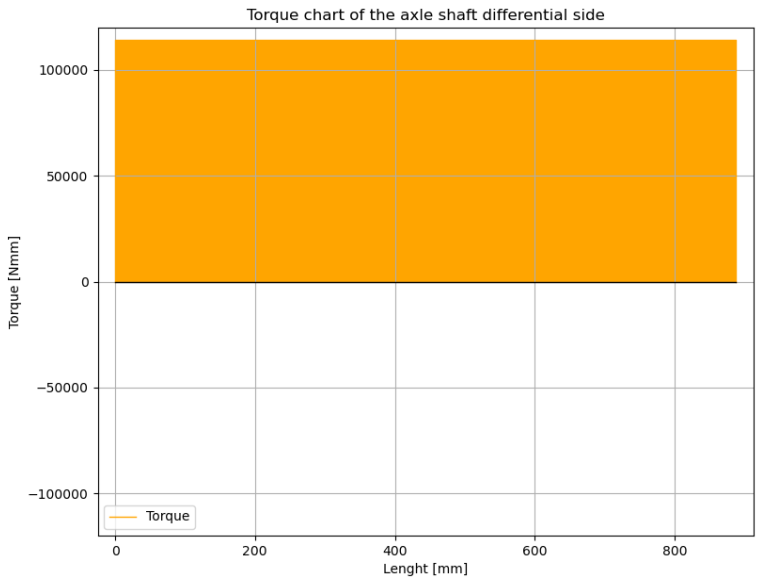

Figure 3-42 Torque chart axle shaft - (Differential side).

As already explained in the paragraphs 3.1.1.2 and 3.1.1.3, the ideal bending moment M_{bi} is evaluated with the following equivalence:

$$M_{bi} = \sqrt{M_b^2 + 0{,}75 * T^2} = \sqrt{(209{,}89 * 342)^2 + 0{,}75 * 114000^2} \cong 122063{,}86\ [N * mm] \tag{62}$$

Remembering that the minimum diameter is equal to:

$$d = \sqrt[3]{\frac{32 * M_{bi}}{\pi * \sigma_{adm,f}}} \tag{63}$$

Having $\sigma_{adm,f} = \frac{1}{3} * \frac{\sigma_U}{X} = \frac{1}{3} * \frac{900}{2} = 150\ [MPa]$, where σ_U is the ultimate strength in MPa of the steel C60 and X is a safety factor, now d can be evaluated:

$$d = \sqrt[3]{\frac{32 * 122063{,}86}{\pi * 150}} \cong 20{,}24\ [mm] \tag{64}$$

About the bearings, there are not high loads applied to them and the maximum speed, calculated in the next equation, is not so high too:

$$n_{axle\ shaft} = \frac{n_{engine}}{i_{primary\ reduction} * i_{6^{th}} * i_{differential}} = \frac{13000}{1{,}8125 * 0{,}5000 * 3{,}5625} \cong 4026{,}62\ [rpm] \tag{65}$$

The bearing that needs to be installed in position B (Figure 3-37) in the real case is on the ring gear, check the next figure to better understand:

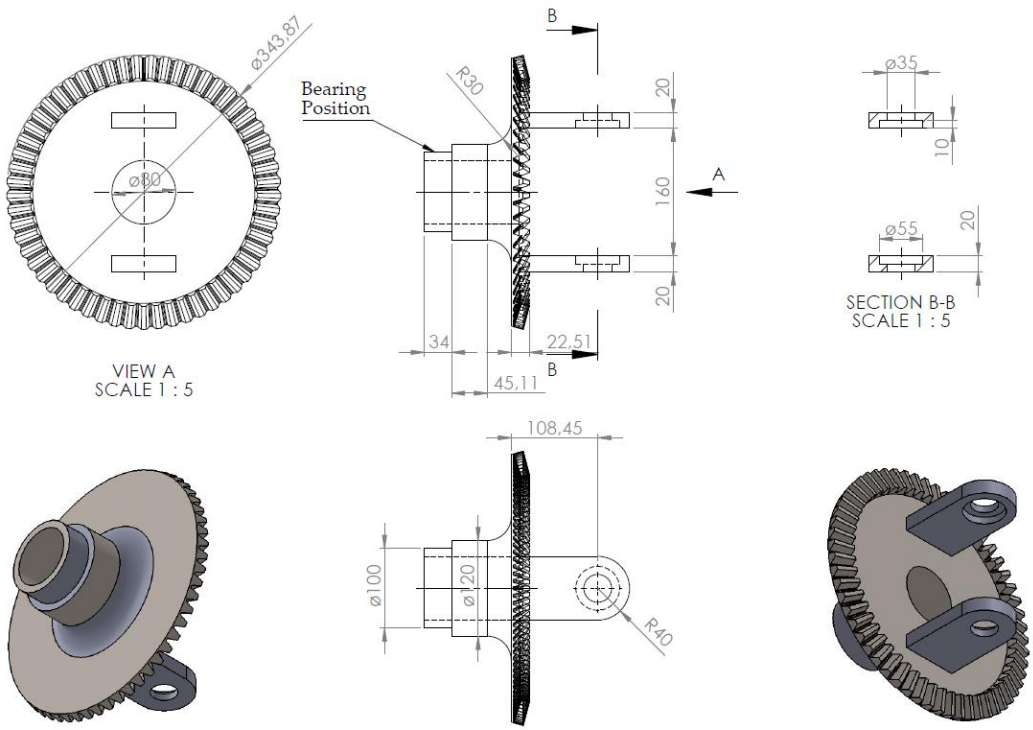

Figure 3-43 Ring Gear - Technical Drawing.

Using the equation (55) and (56) the basic dynamic load rating obtained is $C \cong 2{,}05$, so the bearing selected to be installed with the ring gear (figure 3-43) is the SKF 7220 BECBM:

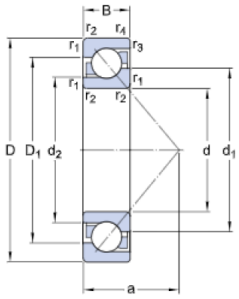

DIMENSIONS

d	100 mm
D	180 mm
B	34 mm
	≈ 130.95 mm
	≈ 115.22 mm
	≈ 150.9 mm
a	76 mm
	min. 2.1 mm
	min. 1.1 mm

Figure 3-44 SKF 7220 BECBM - Technical Specification [15].

For the same reason already explained for the previous bearing, the bearing selected to be installed in position A (Figure 3-37) is the SKF 61812:

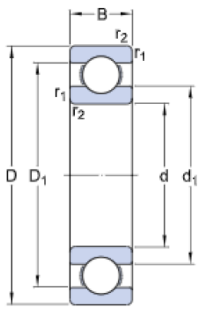

DIMENSIONS

d	60 mm
D	78 mm
B	10 mm
	≈ 65.4 mm
	≈ 72.9 mm
	≈ 74.5 mm
	min. 0.3 mm

Figure 3-45 SKF 61812 - Technical Specification [16].

The final technical drawing of the axle shaft can be found in the project folder *Trasmission\Open Differential\Creo*.

3.2.2 Overview

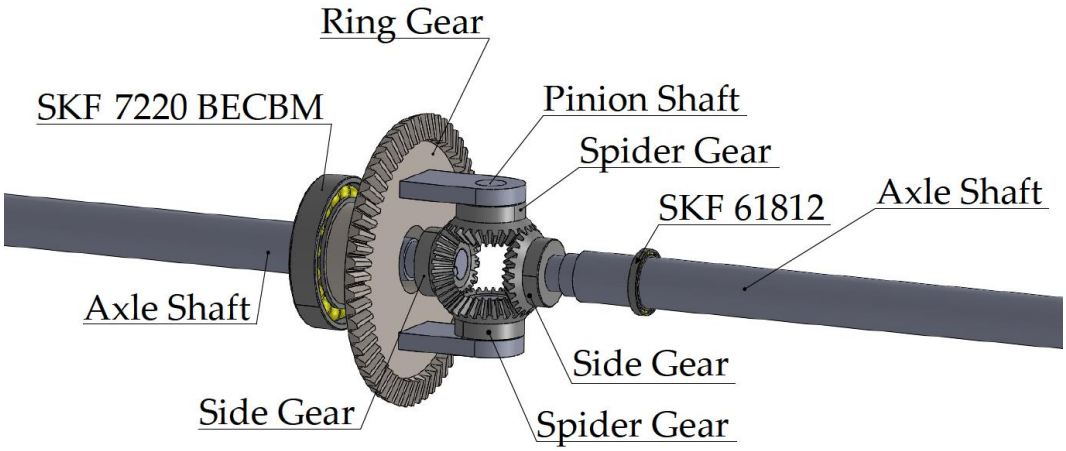

Figure 3-46 Differential overview.

4. Suspensions

Work in progress

5. Software

In this Chapter there is the description of each kind of software used in this thesis.

5.1 CAE Software

5.1.1 Altair® HyperWorks®

Figure 5-1 Altair® logo

Altair® HyperWorks® is a computer-aided engineering (CAE) simulation software platform.
It consists all the modules of CAE i.e. modelling, meshing, solver. It is a complete package of finite element procedure. Preprocessing, Solving and Postprocessing can be done using Hyperworks.
HyperWorks is a product of that consisting of a number of software, the software used in this thesis are HyperMesh, HyperView and Inspire.

5.1.1.1 HyperMesh

It is part of the HyperWorks package, inside HM there are different Solvers as RADIOSS and OptiStruct, the last one is the solver used in this thesis.
OptiStruct is a modern structural analysis solver for linear and nonlinear problems under static and dynamic loadings. It is the market-leading solution for structural design and optimization and it is based on finite-element and multi-body dynamics technology.

5.1.1.2 HyperView

It is a complete post-processing and visualization environment where is possible perform different studies, including finite element analysis and optimization.
With ISO plots and element densities is possible to visualize and determine what geometry needs to be further post-processed.

5.1.2 Ansys®

Figure 5-2 Ansys® logo

Ansys develops and markets finite element analysis software used to simulate engineering problems. The software creates simulated computer models of structures or machine components to simulate strength, toughness, elasticity and other attributes.
Most Ansys simulations are performed using the AW software.

5.1.2.1 Ansys® Workbench

It is a software environment to carry out various analyses such as structural, thermal and electromagnetic. It is structured in blocks and anyone of them is created to achieve different analysis in a diverse field.

5.1.2.2 SpaceClaim

It is integrated inside the Ansys software and is used to create, edit or repair geometries. Typically, it reads the STL files exported from Mechanical and do the post-process on the geometry before design validation. The geometry is then converted into a solid to analyse it again in ANSYS Mechanical.

5.2 CAD Software

5.2.1 Siemens® NX

Figure 5-3 Siemens® NX logo

It is a CAD/CAM/CAE software, in this thesis was used to perform the post-processing on the geometries and to do the TO study since this feature with the last release of the software was implemented.

5.2.2 SolidWorks®

SolidWorks is solid modelling software that allows you to design products in 3 dimensions. The technique is generally to sketch 2D profiles then use methods like extruding and lofting to produce the solid shape.

Figure 5-4 Solidworks® logo

5.2.3 PTC Creo®

Creo is a family or suite of Computer-aided design (CAD) apps supporting product design for discrete manufacturers and is developed by PTC. The suite consists of apps, each delivering a distinct set of capabilities for a user role within product development.
Creo provides apps for 3D CAD parametric feature solid modeling, 3D direct modeling, 2D orthographic views, Finite Element Analysis and simulation, schematic design, technical illustrations, and viewing and visualization.

Figure 5-5 PTC Creo® logo

5.2.4 Catia V5

Figure 5-6 Catia® V5 logo

CATIA software (an acronym of computer-aided three-dimensional interactive application) is a multi-platform software suite for computer-aided design (CAD), computer-aided manufacturing (CAM), computer-aided engineering (CAE), PLM and 3D, developed by the French company Dassault Systèmes.

5.3 Mathematical Solvers

5.3.1 MATLAB®

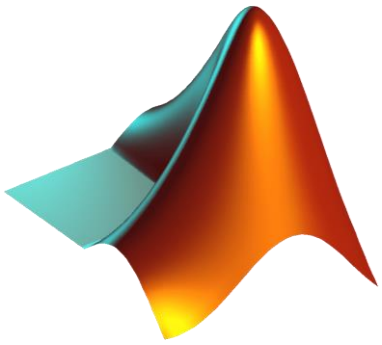

Figure 5-7 MATLAB® logo

MATLAB (matrix laboratory) is a multi-paradigm numerical computing environment and proprietary programming language developed by MathWorks. MATLAB allows matrix manipulations, plotting of functions and data, implementation of algorithms, creation of user interfaces, and interfacing with programs written in other languages.

5.3.2 PyCharm®

Figure 5-8 PyCharm® logo

PyCharm® is an integrated development environment (IDE) used in computer programming, specifically for the Python language. It is developed by the Czech company JetBrains. It provides code analysis, a graphical debugger, an integrated unit tester, integration with version control systems (VCSes), and supports web development with Django as well as Data Science with Anaconda.

List of Figures

Figure 1-1 Formula 1000 car [2]. 1
Figure 2-1 Dyno chart 2014 CBR1000RR [3]. 2
Figure 3-1 Overview of the sequential gearbox system [6]. 3
Figure 3-2 Tengine Selection. 5
Figure 3-3 Example of 1st gear inserted [6]. 6
Figure 3-4 Spur gear sketch. 10
Figure 3-5 Bevel gears terminology [10]. 11
Figure 3-6 Loads exchanged between spur gear wheels. 13
Figure 3-7 Layshaft sketch. 14
Figure 3-8 Layshaft 1st gear beam representation. 14
Figure 3-9 Layshaft 1st gear final configuration. 15
Figure 3-10 Shear chart 1st gear – layshaft. 15
Figure 3-11 Bending moment chart 1st gear – layshaft. 15
Figure 3-12 Torque chart 1st gear – layshaft. 16
Figure 3-13 Section with keyway representation. 17
Figure 3-14 ISO R773 [8]. 18
Figure 3-15 SKF 62/22 Technical specification [9]. 19
Figure 3-16 Loads exchanged between bevel gear wheels. 20
Figure 3-17 Mainshaft sketch. 21
Figure 3-18 Mainshaft 1st gear beam representation. 21
Figure 3-19 Mainshaft 1st gear final configuration. 22
Figure 3-20 Shear chart 1st gear – mainshaft. 23
Figure 3-21 Bending moment chart 1st gear – mainshaft. 23
Figure 3-22 Traction chart 1st gear – mainshaft. 24
Figure 3-23 Torque chart 1st gear – mainshaft. 24
Figure 3-24 ISO 14-82 [11]. 26
Figure 3-25 SKF 320/22 X Technical specification [12]. 28
Figure 3-26 Hub 1 - Technical drawing. 29
Figure 3-27 RNAO 45x62x40 Technical specification [13]. 30
Figure 3-28 SKF 61809-Y Technical specification [14]. 31
Figure 3-29 Disk 1st - 2nd - Technical drawing. 31
Figure 3-30 Stress analysis - Layshaft (1st gear). 32
Figure 3-31 Deformation analysis - Layshaft (1st gear). 32
Figure 3-32 Stress analysis - Mainshaft (1st gear). 33
Figure 3-33 Deformation analysis - Mainshaft (1st gear). 33
Figure 3-34 Gearbox overview. 34
Figure 3-35 Miter Gears KHK SMA4 25 [17]. 35
Figure 3-36 Differentil Side / Shaft Side. 35
Figure 3-37 Axle shaft beam representation. 36
Figure 3-38 Axle shaft configuration - (Differential side). 36
Figure 3-39 Shear chart axle shaft - (Differential side). 37
Figure 3-40 Bending moment chart axle shaft - (Differential side). 37
Figure 3-41 Traction chart axle shaft - (Differential side). 38
Figure 3-42 Torque chart axle shaft - (Differential side). 38
Figure 3-43 Ring Gear - Technical Drawing. 39
Figure 3-44 SKF 7220 BECBM - Technical Specification [15]. 40
Figure 3-45 SKF 61812 - Technical Specification [16]. 40
Figure 3-46 Differential overview. 41
Figure 5-1 Altair® logo 42
Figure 5-2 Ansys® logo 43
Figure 5-3 Siemens® NX logo 43
Figure 5-4 Solidworks® logo 44
Figure 5-5 PTC Creo® logo 44
Figure 5-6 Catia® V5 logo 44
Figure 5-7 MATLAB® logo 45
Figure 5-8 PyCharm® logo 45

References

[1] “Formula 1000 Technical Regulations – Version 1,” [Online]. Available: http://frca.net.au/wp-content/uploads/2013_Formula_1000_Technical_Regulations_-_Version_1.pdf. [Accessed June 2020].

[2] “THE NEED FOR SPEED,” [Online]. Available: https://heraldonlinejournal.com/2020/01/17/the-need-for-speed/. [Accessed June 2020].

[3] “2014 CBR1000RR Aftermarket Exhaust and Dyno Tuning,” [Online]. Available: http://superbikesolutions.blogspot.com/2015/08/2014-cbr1000rr-aftermarket-exhaust-and.html. [Accessed June 2020].

[4] “CBR1000RR,” Honda, [Online]. Available: https://www.motorcyclespecs.co.za/model/Honda/honda_cbr1000rr_sp_14.html. [Accessed June 2020].

[5] D. Seward, Race Car Design, Palgrave, 2014.

[6] “F1 transmission system explained,” 13 February 2015. [Online]. Available: https://www.sportskeeda.com/f1/f1-transmission-system-explained. [Accessed June 2020].

[7] L. Caligaris, S. Fava e C. Tomasello, Manuale di Meccanica, Hoepli Milano, 2011.

[8] “Standard Metric Keys & Keyways,” [Online]. Available: http://www.jaredzone.info/2010/12/standard-metric-keys-keyways.html. [Accessed July 2020].

[9] “62/22,” SKF, [Online]. Available: https://www.skf.com/group/products/rolling-bearings/ball-bearings/deep-groove-ball-bearings/productid-62%2F22. [Accessed July 2020].

[10] O. Chandler, “Gears and Cams,” [Online]. Available: https://slideplayer.com/slide/13238058/. [Accessed July 2020].

[11] “Straight-sided splines for cylindrical shafts with internal centering - Dimensions, tolerances and verification,” [Online]. Available: https://www.saiglobal.com/PDFTemp/Previews/OSH/ISO/ISO_12345_07-01/T003596E.PDF. [Accessed June 2020].

[12] “320/22 X,” SKF, [Online]. Available: https://www.skf.com/group/products/rolling-bearings/roller-bearings/tapered-roller-bearings/single-row-tapered-roller-bearings/productid-320%2F22%20X. [Accessed July 2020].

[13] “RNAO45X62X40-ZW-ASR1-XL,” Schaeffler, [Online]. Available: https://medias.schaeffler.com/medias/it!hp.ec.br.pr/RNAO..-ZW-ASR1*RNAO45X62X40-ZW-ASR1-XL;bvhRp4WWpLlc?lang=en. [Accessed July 2020].

[14] “61809-Y,” Schaeffler, [Online]. Available: https://medias.schaeffler.com/medias/en!hp.ec.br.pr/618*61809-Y?clrsb=1&. [Accessed July 2020].

[15] “7220 BECBM,” SKF, [Online]. Available: https://www.skf.com/us/products/rolling-bearings/ball-bearings/angular-contact-

ball-bearings/single-row-angular-contact-ball-bearings/productid-7220%20BECBM. [Accessed July 2020].

[16] “61812,” SKF, [Online]. Available: https://www.skf.com/sg/products/rolling-bearings/ball-bearings/deep-groove-ball-bearings/productid-61812. [Accessed July 2020].

[17] “SMA4-25,” KHK, [Online]. Available: https://khkgears2.net/catalog6/SMA4-25. [Accessed July 2020].