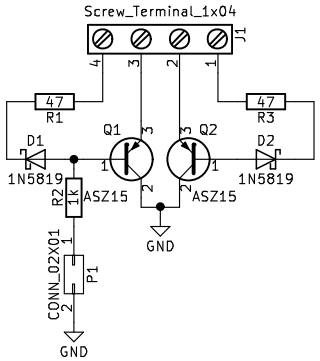

Sheet: /
File: bjtcc.sch

Title:

Size: A4	Date:	**Rev:**
KiCad E.D.A. kicad 4.0.5+dfsg1-4		Id: 1/1