AFWAL-TR-81-3041
VOLUME 3

LEVEL III

2

AD A101659

EFFECT OF VARIANCES AND MANUFACTURING TOLERANCES ON THE DESIGN STRENGTH AND LIFE OF MECHANICALLY FASTENED COMPOSITE JOINTS

VOLUME 3 - BOLTED JOINT STRESS FIELD MODEL (BJSFM) COMPUTER PROGRAM USER's MANUAL

J.M. Ogonowski

McDonnell Aircraft Company
McDonnell Douglas Corporation
P.O. Box 516
St. Louis, Missouri 63166

DTIC ELECTE JUL 21 1981 C

April 1981

Final Report for Period 15 February 1978 - 15 April 1981

DTIC FILE COPY

Approved for public release; distribution unlimited

FLIGHT DYNAMICS LABORATORY
AIR FORCE WRIGHT AERONAUTICAL LABORATORIES
AIR FORCE SYSTEMS COMMAND
WRIGHT-PATTERSON AIR FORCE BASE, OHIO 45433

81 7 21 011

NOTICE

When Government drawings, specifications, or other data are used for any purpose other than in connection with a definitely related Government procurement operation, the United States Government thereby incurs no responsibility nor any obligation whatsoever; and the fact that the government may have formulated, furnished, or in any way supplied the said drawing, specifications, or other data, is not to be regarded by implication or otherwise as in any manner licensing the holder or any other person or corporation, or conveying any rights or permission to manufacture, use, or sell any patented invention that may in any way be related thereto.

This report has been reviewed by the Office of Public Affairs (ASD/PA) and is releasable to the National Technical Information Service (NTIS). At NTIS, it will be available to the general public, including foreign nations.

This technical report has been reviewed and is approved for publication.

ROBERT L. GALLO, Capt, USAF
Project Engineer

DAVEY L. SMITH, Chief
Structural Integrity Branch
Structures and Dynamics Division

FOR THE COMMANDER

RALPH L. KUSTER, JR., Col, USAF
Chief, Structures and Dynamics Division

If your address has changed, if you wish to be removed from our mailing list, or if the addressee is no longer employed by your organization please notify AFWAL/FIBEC, Wright-Patterson AFB, OH 45433 to help us maintain a current mailing list. Copies of this report should not be returned unless return is required by security considerations, contractual obligations, or notice on a specific document.

AIR FORCE/56780/16 June 1981 — 500

(12) 53

SECURITY CLASSIFICATION OF THIS PAGE (When Data Entered)

(19) **REPORT DOCUMENTATION PAGE**

READ INSTRUCTIONS BEFORE COMPLETING FORM

(18) 1. REPORT NUMBER: AFWAL-TR-81-3041-Volume 3 VOL-3

2. GOVT ACCESSION NO.: AD A107659

3. RECIPIENT'S CATALOG NUMBER: (9)

(6) 4. TITLE (and Subtitle): EFFECT OF VARIANCES AND MANUFACTURING TOLERANCES ON THE DESIGN STRENGTH AND LIFE OF MECHANICALLY FASTENED COMPOSITE JOINTS. VOLUME 3. Bolted Joint Stress Field Model (BJSFM) Computer Program User's Manual.

5. TYPE OF REPORT & PERIOD COVERED: Final Report, 15 Feb[redacted] 1978 — 15 Apr[redacted]981, Volume 3

6. PERFORMING ORG. REPORT NUMBER: (15)

(10) 7. AUTHOR(s): J. M. Ogonowski

8. CONTRACT OR GRANT NUMBER(s): F33615-77-C-3140

9. PERFORMING ORGANIZATION NAME AND ADDRESS:
McDonnell Aircraft Company
P. O. Box 516
St. Louis, Missouri 63166

10. PROGRAM ELEMENT, PROJECT, TASK AREA & WORK UNIT NUMBERS:
P.E. 62201F
W.U. 24070110

11. CONTROLLING OFFICE NAME AND ADDRESS: (11)
FLIGHT DYNAMICS LABORATORY
AFSC (AFWAL/FIBEC)
WRIGHT-PATTERSON AFB, OHIO 45433

12. REPORT DATE: Apr[redacted]981

13. NUMBER OF PAGES: 46

14. MONITORING AGENCY NAME & ADDRESS (if different from Controlling Office): (16) 2401 / (17) 01

15. SECURITY CLASS. (of this report): Unclassified

15a. DECLASSIFICATION/DOWNGRADING SCHEDULE

16. DISTRIBUTION STATEMENT (of this Report):
Approved for public release; distribution unlimited

17. DISTRIBUTION STATEMENT (of the abstract entered in Block 20, if different from Report):

JUL 2[illegible]1981

18. SUPPLEMENTARY NOTES

19. KEY WORDS (Continue on reverse side if necessary and identify by block number)

Bolted Joints	Methodology
Composite	Load Distributions
Graphite-expoxy	Stress Analysis
Orthotropic	Failure Criteria
Stress Concentrations	Fatigue Life

20. ABSTRACT (Continue on reverse side if necessary and identify by block number)

The subject of this program was structural evaluation of mechanically fastened composite joints. Program objectives were threefold: (1) development and verification by test of improved static strength methodology, (2) experimental evaluation of the effects of manufacturing anomalies on joint static strength, and (3) experimental evaluation of joint fatigue life.

DD FORM 1 JAN 73 1473

403111

SECURITY CLASSIFICATION OF THIS PAGE (When Data Entered)

Program activities to accomplish these objectives were organized under five tasks. Under Task 1 - Literature Survey, a survey was performed to determine the state-of-the-art in design and analysis of bolted composite joints. Experimental evaluations of joint static strength were performed under Tasks 2 and 3. In Task 2 - Evaluation of Joint Design Variables, strength data were obtained through an experimental program to evaluate the effects of twelve joint design variables. In Task 3 - Evaluation of Manufacturing and Service Anomalies, effects of seven anomalies on joint strength were evaluated experimentally and compared with Task 2 strength data. Bolted composite joint durability was evaluated under Task 4 - Evaluation of Critical Joint Design Variables on Fatigue Life. Seven critical design variables or manufacturing anomalies were identified based on Task 2 and 3 strength data. Under Task 5 - Final Analyses and Correlation, required data reduction, methodology development and correlation, and necessary documentation were performed.

This report documents all program activities performed under Tasks 2, 3, 4 and 5. Activities performed under Task 1 - Literature Survey, were previously reported on AFFDL-TR-78-179. Static strength methodology and evaluations of joint static and fatigue test data are reported. Analytic studies complement methodology development and illustrate: the need for detailed stress analysis, the utility of the developed "Bolted Joint Stress Field Model" (BJSFM) procedure, and define model limitations. For static strength data, correlations with analytic predictions are included. Data trends in all cases are discussed relative to joint strength and failure mode. For joint fatigue studies, data trends are discussed relative to life, hole elongation, and failure mode behavior.

This final report is organized in the following three volumes:

Volume 1 - Methodology Development and Data Evaluation
Volume 2 - Test Data, Equipment and Procedures
Volume 3 - Bolted Joint Stress Field Model (BJSFM) Computer Program User's Manual

FOREWORD

The work reported herein was performed by the McDonnell Aircraft Company (MCAIR) of the McDonnell Douglas Corporation (MDC), St. Louis, Missouri, under Air Force Contract F33615-77-C-3140, for the Flight Dynamics Laboratory, Wright-Patterson Air Force Base, Ohio. This effort was conducted under Project No. 2401 "Structural Mechanics", Task 240101 " Structural Integrity for Military Aerospace Vehicles", Work Unit 24010110 "Effect of Variances and Manufacturing Tolerances on the Design Strength and Life of Mechanically Fastened Composite Joints". The Air Force Project Engineer at contract go-ahead was Mr. Roger J. Aschenbrenner (AFWAL/FIBEC); in December 1979, Capt. Robert L. Gallo (AFWAL/FIBEC) assumed this assignment. The work described was conducted during the period 15 February 1978 through 15 April 1981.

Program Manager was Mr. Ramon A. Garrett, Branch Chief Technology, MCAIR Structural Research Department. Principal Investigator was Mr. Samual P. Garbo, MCAIR Structural Research Department.

Accession For
NTIS GRA&I ☑
DTIC TAB ☐
Unannounced ☐
Justification
By
Distribution/
Availability Codes
Dist | Avail and/or Special
A

TABLE OF CONTENTS

Section		Page
I	INTRODUCTION	1
II	PROGRAM DESCRIPTION	2
III	USER'S INSTRUCTIONS	6
IV	OUTPUT OPTIONS	11
V	PROGRAM LIMITATIONS	15
VI	EXAMPLE PROBLEMS	16
VII	PROGRAM LISTING	20

LIST OF ILLUSTRATIONS

Figure No.		Page
1	General Load Conditions Analyzed by BJSFM . .	3
2	Bolted Joint Stress Field Model - BJSFM (Computer Program Flow Chart)	3
3	Superposition of Linear - Elastic Stress Solutions	4
4	Assumed Cosine Bolt Load Distribution	4
5	Superposition of Infinite Plate Results Approximates a Finite Width Joint	5
6	Program Nomenclature	7
7	Example Input Instructions	10
8	Laminate Stress Distribution Output Data Option	12
9	Ply-by-Ply Strain Distribution Output Data Option	13
10	Loaded Hole Case	17
11	Isotropic Unloaded Hole	18
12	General Loading Condition	19

SECTION I

INTRODUCTION

One objective of this program was to develop a static strength methodology for mechanically-fastened composite joints. This volume documents user-options and instructions for a computer program to analyze the effects of stress concentrations on laminate strength. Entitled "Bolted Joint Stress Field Model" (BJSFM), it computes stress distributions on a lamina or laminate basis for unloaded or loaded (bolt bearing) holes in isotropic or anisotropic materials. Failure predictions based on lamina properties and one of several failure criteria are possible. This volume describes the formulation and input data requirements and output options. Sample problems and a computer program listing are also included.

SECTION II

PROGRAM DESCRIPTION

The Bolted Joint Stress Field Model has been developed to facilitate strength analysis of isotropic or anisotropic materials at individual fastener holes. Static strength of an anisotropic laminate with a fastener hole is predicted using a closed-form analytic approach based on (1) elastic anisotropic theory of elasticity, (2) lamination plate theory and (3) one of several optional failure hypotheses. The program has capability to handle strength and stiffness anisotropy, general in-plane loadings, as shown in Figure 1, multi-material (hybrid) laminates and arbitrary hole (bolt) sizes. BJSFM modular substructuring is illustrated in Figure 2. Input data required are: lamina mechanical properties, in-plane loadings, hole geometry, and hole loading. Options are available which provide computation results after each program block.

The stress field calculations are based on two-dimensional anisotropic theory of elasticity solutions for a homogeneous, anisotropic infinite plate. Laminate stress distributions around an unloaded or loaded (bolt bearing) hole are calculated using plane stress assumptions. Laminate stress and strain distributions for combined bearing and bypass loads are obtained using the principle of superposition (Figure 3). Fastener bearing is idealized as a cosine radial stress distribution (Figure 4). Finite width corrections for loaded holes are based on superposition of infinite plate results as shown in Figure 5. Infinite plate solutions are exact while corrections for finite width joints are approximate and most accurate for width-to-diameter ratios greater than four.

Laminate strains are calculated using material compliance relations. Laminate compliance coefficients are determined using lamination plate theory with unidirectional (lamina) elastic constants, lamina orientations and thicknesses. Strains for individual plies along lamina principal material axes are calculated using coordinate transformations. The solution is strictly valid only for homogeneous media; however, it has been assumed valid for mid-plane symmetric laminates.

Laminate failure is predicted by comparing elastic stress distributions with any of five material failure criteria on a ply-by-ply basis. Failure can be assessed at any location in the field of the plate.

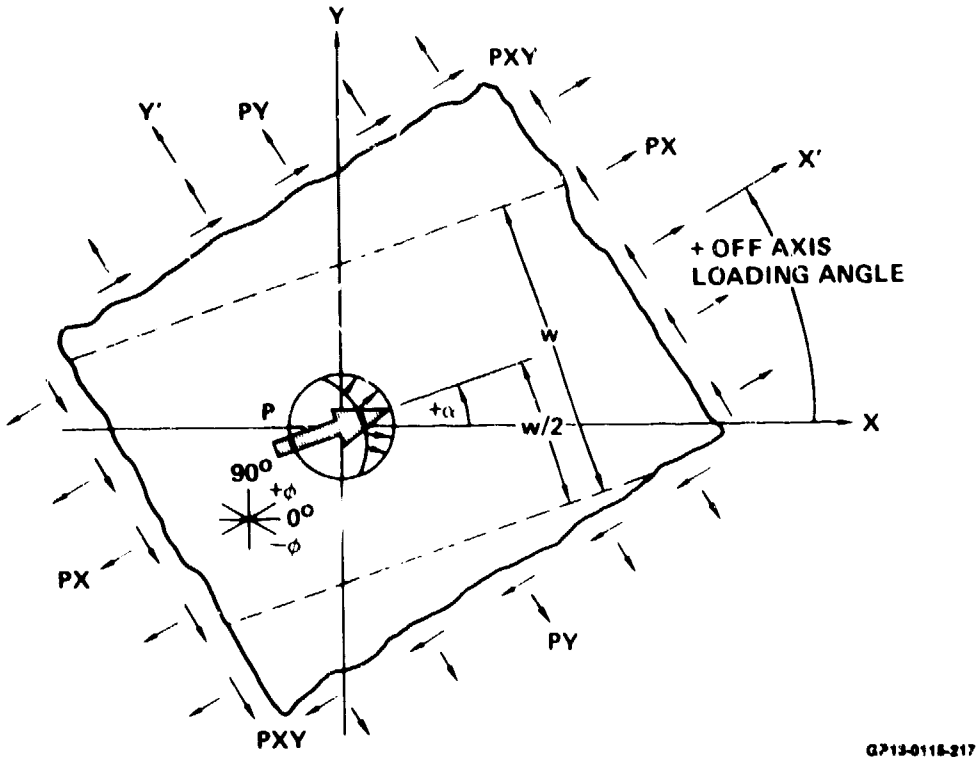

Figure 1. General Load Conditions Analyzed Using BJSFM

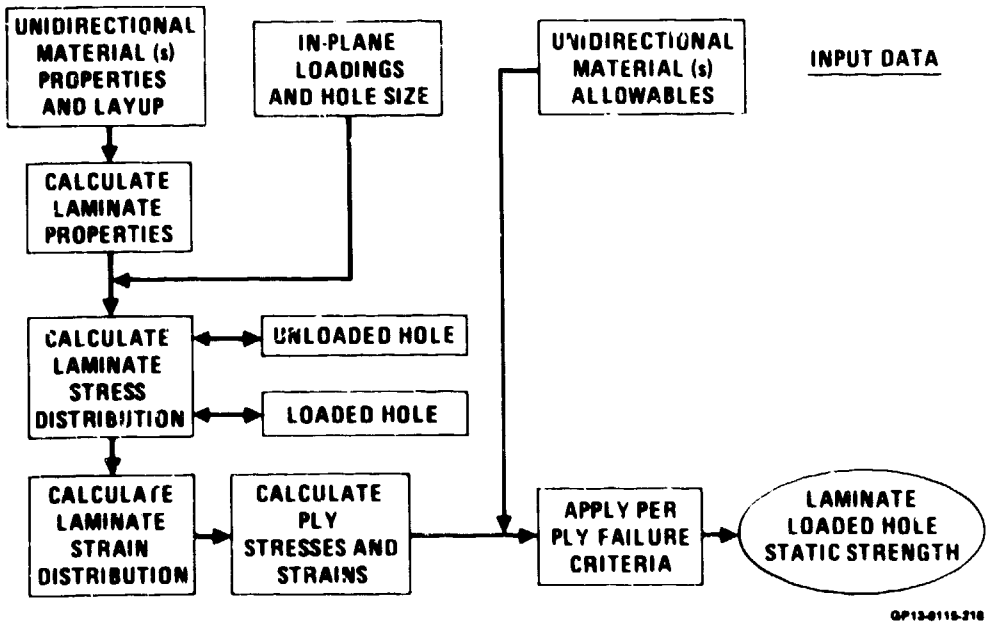

Figure 2. Bolted Joint Stress Field Model - BJSFM
Computer Program Flow Chart

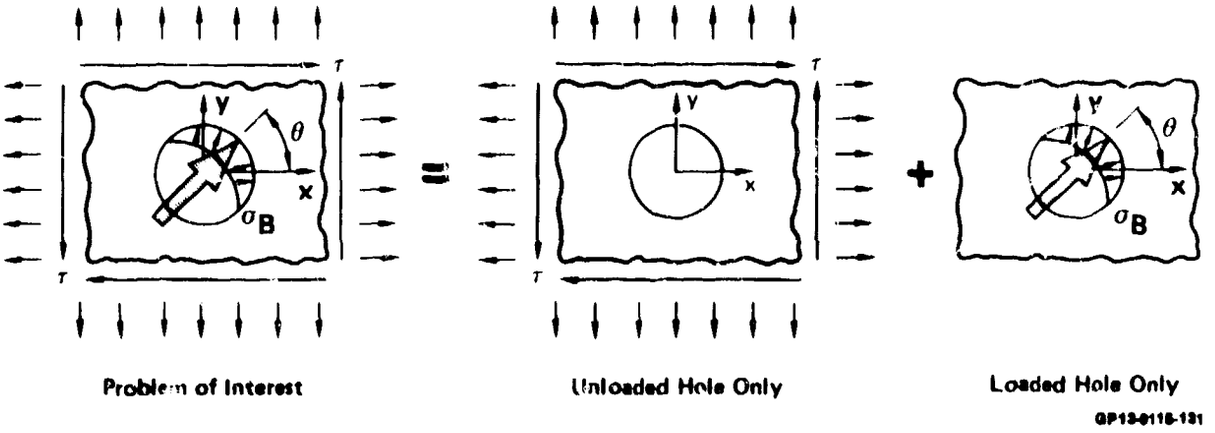

Figure 3. Superposition of Linear-Elastic Stress Solutions

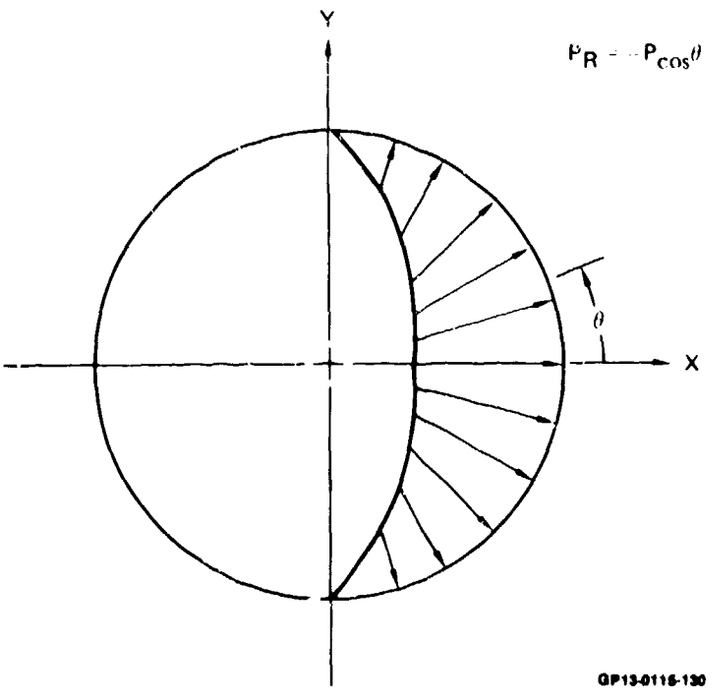

Figure 4. Assumed Cosine Bolt-Load Distribution

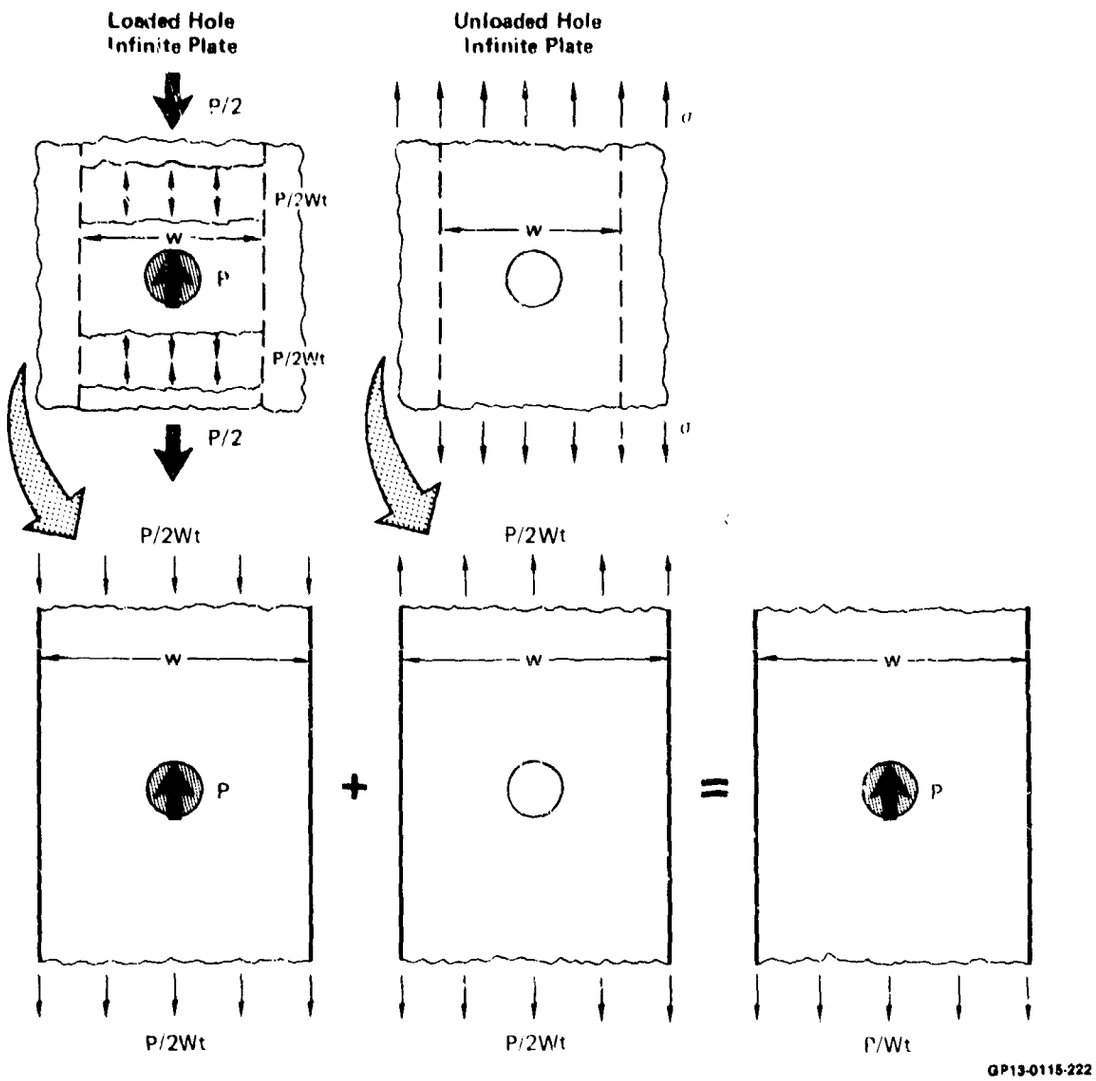

Figure 5. Superposition of Infinite Plate Results Approximates a Finite Width Joint

SECTION III

USER'S INSTRUCTIONS

Conversational interactive procedures are used for specifying input data for operation of the BJSFM program which is programmed to accept free formatted input data. A user may, after becoming familiar with the input procedures, elect to delete input instructions and receive only question marks, identifying all required input data. Using the various output options, users may receive as much or as little data as desired. The nature of required input data is dependent on user-selected output data options; the BJSFM program automatically adjusts its input data requirements to accommodate each output data option.

Up to eight different ply orientations and three different materials may be input. For each ply orientation, a corresponding thickness must be specified as well as material for hybrid laminates. Ply thickness may be either actual or a normalized thickness. A mid-plane symmetric stacking sequence is assumed. Zero degree plies are oriented parallel to the X-axis. Nomenclature applicable to the BJSFM is summarized in Figure 6. Positive angles are measured counterclockwise from the X-axis. All input data units must be consistent.

Unidirectional lamina material stiffness properties are required input data for each different material specified. Unidirectional lamina strength allowables for each material are required only if failure analysis is to be performed. If the maximum strain material failure criterion is used, lamina strain allowables must be input; otherwise, input lamina allowables are in terms of stress.

Any set of in-plane far-field stresses may be applied to an infinite anisotropic or isotropic plate (Figure 1). Bearing stress direction is independent of far-field stress directions.

The BJSFM is only capable of handling finite widths for bolt bearing problems; the width, W, is defined as perpendicular to the bolt load direction (Figure 1). The stresses calculated in a finite-width bolt bearing problem are approximate and most accurate for width-to-diameter ratios greater than four. In combined loading conditions, the finite width routine applies to only the loaded hole portion of the problem. To obtain infinite plate results for a loaded hole, input specimen width as Ø.Ø.

The user must specify the "range" (between low and high) of angular interval between locations around the hole for which data will be calculated. This range must also be subdivided by user-selected "degrees between output" to specify points at which calculations are to be made. "Step increments" are used to obtain data at increasing distances away from the hole boundary.

Coordinate Systems

X - Y	Laminate Axis System Originating at the Center of the Hole. Zero Degree Plies are Parallel to the X-Axis.
X' - Y'	Rotation of the X-Y Axis System for Application of Far-Field Stresses
1 - 2	Lamina Axis System; Fibers are Parallel to the 1 Axis and Transverse to the 2 Axis.

Variable Description (Units)**

E1	Lamina Modulus of Elasticity in Fiber (1) Direction (F/L^2)
E2	Lamina Modulus of Elasticity in Transverse (2) Direction (F/L^2)
G12	Lamina Shear Modulus (F/L^2)
V12	Lamina Poisson's Ratio
EX	Laminate Modulus of Elasticity in X Direction (F/L^2)
EY	Laminate Modulus of Elasticity in Y Direction (F/L^2)
GXY	Laminate Shear Modulus (F/L^2)
VXY	Laminate Poisson's Ratio
T1	Lamina Allowable Tensile Strength in Fiber (1) Direction (F/L^2 or L/L)
C1	Lamina Allowable Compressive Strength in Fiber (1) Direction (F/L^2 or L/L)
T2	Lamina Allowable Tensile Strength in Transverse (2) Direction (F/L^2 or L/L)
C2	Lamina Allowable Compressive Strength in Transverse (2) Direction (F/L^2 or L/L)
S	Lamina Allowable Shear Strength (F/L^2 or L/L)
PX	Stress in X' Direction (F/L^2) - Independent of Input Thickness
PY	Stress in Y' Direction (F/L^2) - Independent of Input Thickness
PXY	Shear Stress (F/L^2) - Independent of Input Thickness
P	Applied Bearing Stress (F/L^2) - P = Bolt Load/(Dia x Actual Thickness)
U	Displacement in X Direction (L)
V	Displacement in Y Direction (L)
W	Specimen Width (L) - Bolt Loading Only
DIST	Radial Distance from Hole Boundary (L)
α	Angle of Applied Bolt Load with X Axis (i.e., Bolt Loading Angle)
β	Rotation Angle of X' - Y' Axes from X - Y Axis System (i.e., Off Axis Loading Angle)
θ	Angle from X Axis to a Point Around Fastener Hole
ϕ	Rotation Angle of 1 - 2 Axes from X - Y Axis System (i.e., Ply Orientation Angle)

All angular measurements are positive counterclockwise from the X axis.

* See also Figure 1.

** Any consistent set of units may be used:

F = Force

L = Length

GP13-0115-223

Figure 6. Program Nomenclature*

The maximum input step increment is seven evenly spaced concentric circles; the first step is always at the hole boundary.

The option to use any one of five different failure criteria has been programmed into the BJSFM. Failure analysis is applied on a ply-by-ply basis; therefore, only unidirectional (lamina) allowables are required input data. Only the maximum strain criterion requires the allowables to be input as strains; all others use stress allowables. Equations for each of the programmed failure criteria are given below. When the right hand side of any of the equations exceeds unity, failure has been predicted for the ply. Tension or compression stress/strain allowables used in each criteria are selected automatically, depending on the sign of individual stress field components being evaluated.

Maximum Strain

$$\frac{\varepsilon_1}{F_1} = 1 \qquad \frac{\varepsilon_2}{F_2} = 1 \qquad \frac{\gamma_{12}}{F_{12}} = 1$$

Maximum Stress

$$\frac{\sigma_1}{F_1} = 1 \qquad \frac{\sigma_2}{F_2} = 1 \qquad \frac{\tau_{12}}{F_{12}} = 1$$

Tsai-Hill

$$\left(\frac{\sigma_1}{F_1}\right)^2 + \left(\frac{\sigma_2}{F_2}\right)^2 + \left(\frac{\tau_{12}}{F_{12}}\right)^2 - \frac{\sigma_1 \sigma_2}{F_1^{\,2}} = 1$$

Modified Tsai-Wu

$$\frac{\sigma_1^{\,2}}{F_1^{\,t} F_1^{\,c}} + \frac{\sigma_2^{\,2}}{F_2^{\,t} F_2^{\,c}} + \left(\frac{1}{F_1^{\,t}} - \frac{1}{F_1^{\,c}}\right)\sigma_1 + \left(\frac{1}{F_2^{\,t}} - \frac{1}{F_2^{\,c}}\right)\sigma_2 + \frac{\tau_{12}^{\,2}}{F_{12}^{\,2}} = 1$$

Hoffman

$$\frac{\sigma_1^2}{F_1^t F_1^c} + \frac{\sigma_2^2}{F_2^t F_2^c} - \frac{\sigma_1 \sigma_2}{F_1^t F_1^c} + \frac{F_1^c - F_1^t}{F_1^t F_1^c}\sigma_1 + \frac{F_2^c - F_2^t}{F_2^t F_2^c}\sigma_2$$

$$+ \frac{\tau_{12}^2}{F_{12}^2} = 1$$

An example printout of the "conversational" language used to request input data is shown in Figure 7.

```
 RNH
 1DO YOU WANT INSTRUCTIONS?
?YES
 SELECT DESIRED OUTPUT FROM THE FOLLOWING CASES.
  1  CARPET PLOT DATA
  2  LAMINATE PROPERTIES
  3  LAMINATE STRESSES
  4  LAMINATE STRAINS
  5  CIRCUMFERENTIAL & RADIAL STRESSES/STRAINS
  6  DISPLACEMENTS
  7  STRAINS PER PLY
  8  STRESSES PER PLY
  9  FAILURE CRITERIA PER PLY
 10  AUTOMATIC SEARCH FOR FAILURE
?2,3,4,5,6,7,8,9,10
 INPUT NUMBER OF DIFFERENT PLIES TO BE INPUT (8 MAX) AND
 NUMBER OF DIFFERENT MATERIALS (3 MAX)
?4,1
 INPUT THE UNIDIRECTIONAL MATERIAL PROPERTIES FOR EACH MATERIAL
 IN THE FOLLOWING ORDER:  E1, E2, G12, POISSONS RATIO
?18.85E6,1.9E6,.85E6,.3
 INPUT THE UNIDIRECTIONAL ALLOWABLES FOR EACH MATERIAL
 IN THE FOLLOWING ORDER:  T1, C1, T2, C2, SHEAR
?230000,320000,28200,32300,17300
 INPUT THE ANGULAR ORIENTATION OF EACH PLY
?0.,45.,-45.,90.
 INPUT THE THICKNESS OF EACH PLY
?.5,.2,.2,.1
 INPUT:  FAR FIELD STRESSES PX,PY,PXY, OFF AXIS ANGLE, BEARING STRESS
 AND BOLT LOADING ANGLE.
?10000.,0.,2500.,45.,50000.,10.
 INPUT WIDTH (0.0 FOR INFINITE PLATE)
?1.5
 INPUT BOLT DIAMETER, DEGREES BETWEEN OUTPUT, LOW RANGE, HIGH RANGE,
 STEP INCREMENT AND NUMBER OF STEPS DESIRED (7 MAX)
?.25,30.,0.,360.,.02,2
 INPUT THE NUMBER WHICH CORRESPONDS TO THE FAILURE CRITERIA
 YOU WISH TO USE
 1  MAXIMUM STRAIN
 2  MAXIMUM STRESS
 3  TSAI-HILL
 4  MODIFIED TSAI-WU
 5  HOFFMAN
?3
```

GP13-0115-234

Figure 7. Example Input Instructions

SECTION IV

OUTPUT OPTIONS

Various output options are available for user selection. The user may select any or all of the following options by inputting the appropriate number(s):

1. Carpet Plot Data
2. Laminate Properties
3. Laminate Stresses
4. Laminate Strains
5. Circumferential and Radial Stresses/Strains
6. Laminate Displacements
7. Strains per Ply
8. Stresses per Ply
9. Failure Criteria per Ply
10. Automatic Search for Failure

A brief description of each output option follows.

Option #1 - Carpet Plot Data - The carpet plot data routine will automatically vary the layup of a user input $0°/\pm\phi/90°$ laminate family and calculate any one or all of the other output options (2 through 10) for each layup. Sixty-six different layups are automatically calculated in this routine; therefore, large amounts of data will be generated when using this output option.

Option #2 - Laminate Properties - Laminate stiffness properties are calculated using the unidirectional material elastic constants, ply angular orientations and ply thicknesses. These properties are calculated with respect to the X-Y axes and are the same as would be obtained using conventional lamination theory approaches.

Options #3 and #4 - Laminate Stresses/Strains - Laminate stress and strain distributions are available as output at points around the perimeter of the hole and at other user-specified concentric circles about the hole boundary. Principal stresses and strains are also calculated. All output is referenced to the X-Y axes. Points are located by the radial distance away from the hole boundary and the angular orientation from the X-axis (Figure 8).

Option #5 - Circumferential and Radial Stresses/Strains - Circumferential and radial laminate stresses and strains are calculated by a coordinate transformation. Output is in polar coordinates.

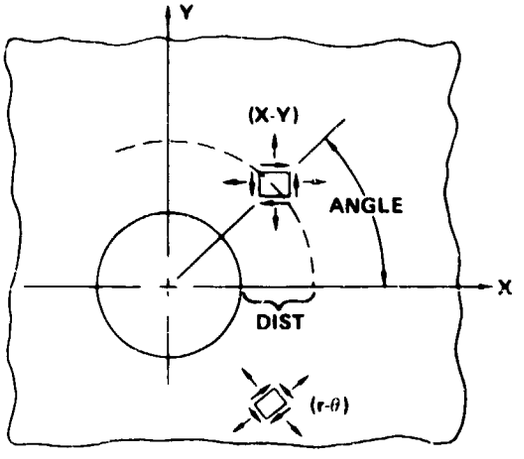

EXAMPLE BJSFM OUTPUT:

LAMINATE STRESSES

DIST	ANGLE	X STRESS	Y STRESS	SHEAR STRESS	MAX. PRINCIPAL	MIN. PRINCIPAL	DIRECTION
0.000	0.00	-62693.22	44412.49	-9.44	44412.50	-62693.23	.01
0.000	30.00	-40151.39	-913.39	-34070.37	18954.04	-59924.32	[illegible]
0.000	60.00	-6819.86	-29542.53	-19690.77	4552.17	[illegible]	
0.000	90.00	58351.08	-11093.21	-9.44	58351		
0.000	120.00	48122.47	16033.31	27733.47	[illegible]		
[illegible]	150.00	9612.46	28347.34	[illegible]			

GP13-0115-225

Figure 8. Laminate Stress Distribution Output Data Option

Option #6 - Laminate Displacements - Displacements for each point are output as U and V, which are displacements in the X and Y directions respectively. Due to limitations in the derivation, displacements for the loaded hole case shall be considered accurate only within approximately three times the diameter of the fastener. Unloaded hole displacements are exact throughout the plate.

Options #7 and 8 - Strains/Stresses per Ply - Strains and stresses per ply are calculated and output in the lamina (1-2) coordinate system. Each ply is identified along with the location of the point around the hole for which stresses/strains are calculated (Figure 9).

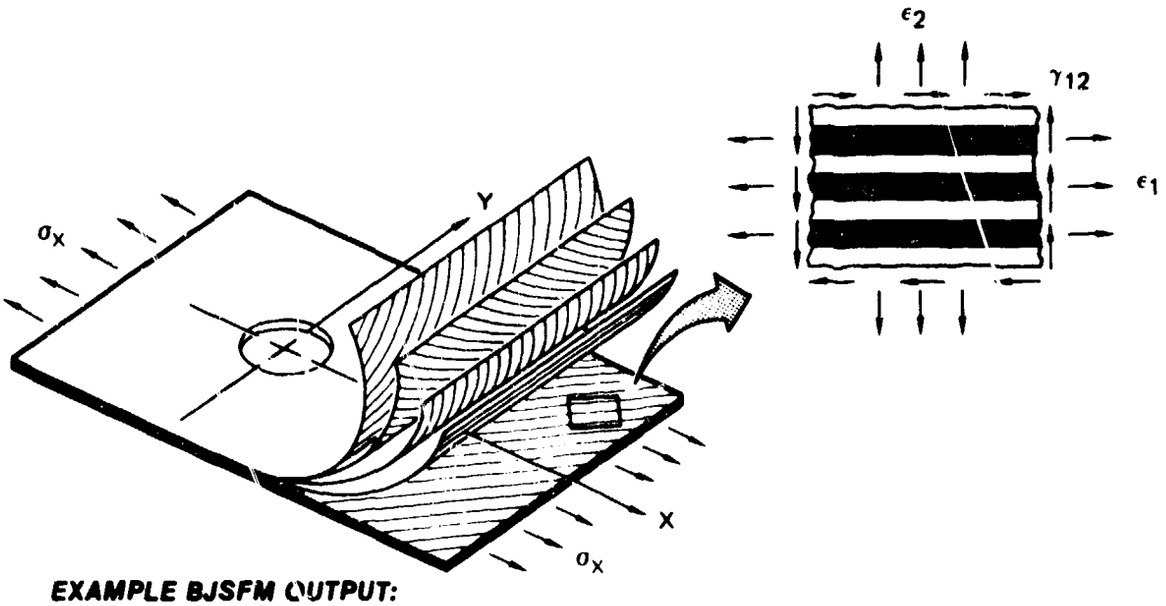

EXAMPLE BJSFM OUTPUT:

STRAINS PER PLY

DIST	ANGLE	PLY	STRAIN 1	STRAIN 2	SHEAR STRAIN
0.000	0.00	0.00	-.007128	.011127	-.000004
0.000	0.00	45.00	.001998	.002001	.018254
0.000	0.00	-45.00	.002001	.001998	-.0182[illegible]
0.000	0.00	90.00	.011127	-.007[illegible]	[illegible]
0.000	30.00	0.00	-.003509		

QP13-0116-328

Figure 9. Ply-by-Ply Strain Distribution Output Data Option

Option #9 - Failure Criteria per Ply - Failure criteria per ply option applies the user-selected material failure criterion (max. stress, Tsai-Hill, etc.) to each ply using the input material allowables. The "failure number" obtained as output data indicates the value calculated by the failure criterion using the stress or strain components at a point. A failure number equal to or greater than one predicts ply failure. The program automatically selects tension or compression allowables depending on the sign of individual stress/strain components being evaluated. "Failure ratios" are output which indicate the relative magnitude of contributing stress components to the overall failure number. Therefore, failure can be assessed as to which stress component is most significant. These failure ratios are in terms of the lamina (1-2) coordinate system.

Option #10 - Automatic Search for Failure - The automatic search for failure routine will search over a user-specified range at each angular increment for the most critical single point as calculated by the material failure criterion. Search for failure is only done at the first step increment away from the hole boundary. Therefore, if a search for failure is to be performed at the boundary of the hole, the step increment must be input as Ø.Ø. The program will automatically ratio the input stress field until first ply failure is predicted. Output is the in-plane stresses at which failure is predicted along with the angular orientation of the predicted failure location. Failure numbers are also given for all other plies at the critical ply failure initiation angle. Failure ratios are also output.

SECTION V

PROGRAM LIMITATIONS

The following are the limitations of the BJSFM program.

- o Strictly valid for homogeneous anisotropic flat plates and assumed valid for mid-plane symmetric laminates.
- o Displacements inaccurate at points more than three times the hole diameter away from the hole boundary for loaded hole cases.
- o Stress fields inaccurate for width-to-diameter ratios less than four.
- o Maximum of eight different ply angular orientations (input).
- o Maximum of three different materials for hybrid laminates (input).
- o Maximum of seven steps away from the hole (output).

The following equation must be satisfied to obtain valid output.

$$[(\text{High Range})-(\text{Low Range})]/(\text{Degrees Between Output}) \leq 72$$

The following data must be input as integers:

Output Option Numbers
Number of Different Plies
Number of Different Materials
Material Number
Number of Steps
Failure Criteria Number

SECTION VI

EXAMPLE PROBLEMS

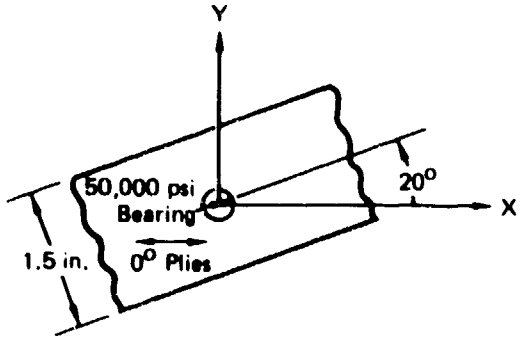


```
 1DO YOU WANT INSTRUCTIONS?
?YES
 SELECT DESIRED OUTPUT FROM THE FOLLOWING CASES.
  1  CARPET PLOT DATA
  2  LAMINATE PROPERTIES
  3  LAMINATE STRESSES
  4  LAMINATE STRAINS
  5  CIRCUMFERENTIAL & RADIAL STRESSES/STRAINS
  6  DISPLACEMENTS
  7  STRAINS PER PLY
  8  STRESSES PER PLY
  9  FAILURE CRITERIA PER PLY
 10  AUTOMATIC SEARCH FOR FAILURE
?4,6
 INPUT NUMBER OF DIFFERENT PLIES TO BE INPUT (8 MAX) AND
 NUMBER OF DIFFERENT MATERIALS (3 MAX)
?4,1
 INPUT THE UNIDIRECTIONAL MATERIAL PROPERTIES FOR EAC  MATERIAL
 IN THE FOLLOWING ORDER:  E1, E2, G12, POISSONS RATIO
?19.95E6,1.9E6,.85E6,.3
 INPUT THE ANGULAR ORIENTATION OF EACH PLY
?0.,45.,-45.,90.
 INPUT THE THICKNESS OF EACH PLY
?.42,.25,.25,.08
 INPUT:  FAR FIELD STRESSES PX,PY,PXY, OFF AXIS ANGLE, BEARING STRESS
 AND BOLT LOADING ANGLE.
?0,0,0,0,50000.,20.
 INPUT WIDTH (0.0 FOR INFINITE PLATE)
?1.5
 INPUT BOLT DIAMETER, DEGREES BETWEEN OUTPUT, LOW RANGE, HIGH RANGE,
 STEP INCREMENT AND NUMBER OF STEPS DESIRED (7 MAX)
?.25,30.,0.,90.,.02,3
```

42% - 0° Plies, 50% - ±45°, 8% - 90°

LAMINATE STRAINS (Output Option No. 4)

DIST	ANGLE	X STRAIN	Y STRAIN	SHEAR STRAIN	MAX. PRINCIPAL	MIN. PRINCIPAL	DIRECTION
0.000	0.00	-.006927	.007109	.000001	.007109	-.006927	-.00
0.000	30.00	-.004137	.001938	-.012340	.005705	-.008005	38.20
0.000	60.00	.001704	-.006583	-.010110	.004099	-.008979	-33.87
0.000	90.00	.005512	-.006573	.000001	.005512	-.006573	.01
.020	0.00	-.005642	.005766	.000253	.005767	-.005643	-1.27
.020	30.00	-.003419	.001412	-.009993	.004546	-.006554	38.21
.020	60.00	.001920	-.005302	-.008304	.003762	-.007443	-32.02
.020	90.00	.003843	-.004336	.001880	.003949	-.004442	12.34
.040	0.00	-.004698	.004788	.000437	.004793	-.004703	-2.63
.040	30.00	-.002855	.001130	-.008420	.003795	-.005520	38.34
.040	60.00	.001898	-.004792	-.006542	.003231	-.005125	-31.46
.040	90.00	.002845	-.003118	.001857	.002986	-.003259	15.96

DISPLACEMENTS (Output Option No. 6)

DIST	ANGLE	U	V
0.000	0.00	.000794	-.000080
0.000	30.00	.000943	.000342
0.000	60.00	.000691	.000535
0.000	90.00	.000215	.000294
.020	0.00	.000655	-.000093
.020	30.00	.000794	.000300
.020	60.00	.000519	.000471
.020	90.00	.000058	.000234
.040	0.00	.000538	-.000104
.040	30.00	.000668	.000268
.040	60.00	.000378	.000419
.040	90.00	-.000045	.000192

```
 DO YOU WISH TO CONTINUE?
?NO
    STOP
```

GP13-0116-220

Figure 10. Loaded Hole Case

```
 1DO YOU WANT INSTRUCTIONS?
?YES
 SELECT DESIRED OUTPUT FROM THE FOLLOWING CASES.
  1  CARPET PLOT DATA
  2  LAMINATE PROPERTIES
  3  LAMINATE STRESSES
  4  LAMINATE STRAINS
  5  CIRCUMFERENTIAL & RADIAL STRESSES/STRAINS
  6  DISPLACEMENTS
  7  STRAINS PER PLY
  8  STRESSES PER PLY
  9  FAILURE CRITERIA PER PLY
 10  AUTOMATIC SEARCH FOR FAILURE
?3,5
 INPUT NUMBER OF DIFFERENT PLIES TO BE INPUT (8 MAX) AND
 NUMBER OF DIFFERENT MATERIALS (3 MAX)
?1,1
 INPUT THE UNIDIRECTIONAL MATERIAL PROPERTIES FOR EACH MATERIAL
 IN THE FOLLOWING ORDER:  E1, E2, G12, POISSONS RATIO
?10.E6,10.E6,3.85E6,.3
 INPUT THE ANGULAR ORIENTATION OF EACH PLY
?0.
 INPUT THE THICKNESS OF EACH PLY
?1.
 INPUT:  FAR FIELD STRESSES PX,PY,PXY, OFF AXIS ANGLE, BEARING STRESS
 AND BOLT LOADING ANGLE.
?10000.,0.,0.,0.,0.,0.
 INPUT BOLT DIAMETER, DEGREES BETWEEN OUTPUT, LOW RANGE, HIGH RANGE,
 STEP INCREMENT AND NUMBER OF STEPS DESIRED (7 MAX)
?.25,15.,0.,90.,0.,1
```

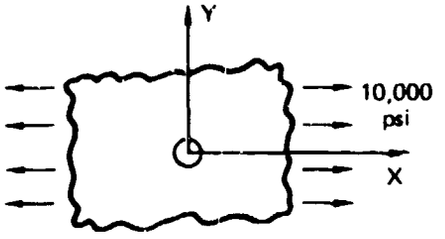

Isotropic Properties

$$\left(E1 = E2,\ G = \frac{E1}{2\,(1+\nu)}\right)$$

LAMINATE STRESSES (Output Option No. 3)

DIST	ANGLE	X STRESS	Y STRESS	SHEAR STRESS	MAX. PRINCIPAL	MIN. PRINCIPAL	DIRECTION
0.000	0.00	-.00	-10000.00	0.00	-.00	-10000.00	0.00
0.000	15.00	-490.49	-6831.64	1[illegible]0.53	-.00	-7322.13	15.00
0.000	30.00	-.41	-1.22	.70	-.00	-1.62	30.00
0.000	45.00	5001.62	5001.62	-50[illegible]1.62	10003.25	-.00	45.00
0.000	60.00	15003.65	5001.22	-86[illegible]2.36	20004.87	.00	-30.00
0.000	75.00	25488.87	1830.02	-68[illegible]9.72	27318.88	.00	-15.00
0.000	90.00	29993.51	-.00	-.00	29993.51	-.00	-.00

CIRCUMFERENTIAL AND RADIAL STRESSES & STRAINS (Output Option No. 5)

DIST	ANGLE	THETA STRESS	RADIAL STRESS	SHEAR STRESS	THETA STRAIN	RADIAL STRAIN	SHEAR STRAIN
0.000	0.00	-10000.00	-.00	0.00	-.001000	.000300	0.000000
0.000	15.00	-7322.13	-.00	-.00	-.000732	.000220	.000206
0.000	30.00	-1.62	-.00	.00	-.000000	.000000	.000000
0.000	45.00	10003.25	-.00	.00	.001000	-.000299	-.000000
0.000	60.00	20004.87	.00	.00	.002000	-.000599	.000562
0.000	75.00	27318.88	.00	.00	.002731	-.000819	.000767
0.000	90.00	29993.51	-.00	-.00	.002999	-.000900	.000000

```
 DO YOU WISH TO CONTINUE?
?NO
   STOP
```

GP13-0115-221

Figure 11. Isotropic Unloaded Hole

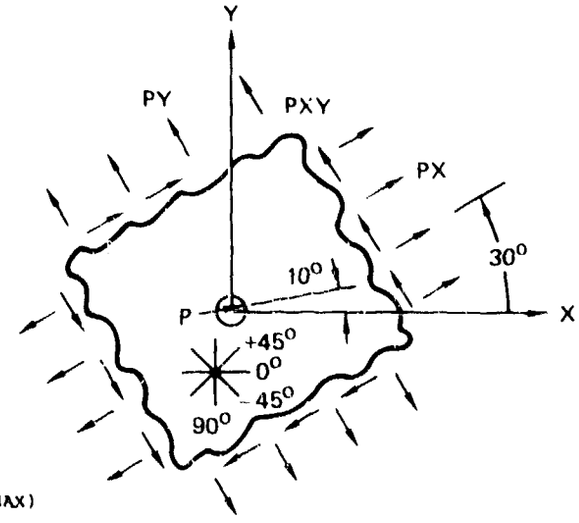


```
 1DO YOU WANT INSTRUCTIONS?
?YES
 SELECT DESIRED OUTPUT FROM THE FOLLOWING CASES.
  1   CARPET PLOT DATA
  2   LAMINATE PROPERTIES
  3   LAMINATE STRESSES
  4   LAMINATE STRAINS
  5   CIRCUMFERENTIAL & RADIAL STRESSES/STRAINS
  6   DISPLACEMENTS
  7   STRAINS PER PLY
  8   STRESSES PER PLY
  9   FAILURE CRITERIA PER PLY
 10   AUTOMATIC SEARCH FOR FAILURE
?10
 INPUT NUMBER OF DIFFERENT PLIES TO BE INPUT (8 MAX)
 AND NUMBER OF DIFFERENT MATERIALS (3 MAX)
?4,1
 INPUT THE UNIDIRECTIONAL MATERIAL PROPERTIES FOR EACH
 MATERIAL IN THE FOLLOWING ORDER:  E1, E2, G12, POISSONS RATIO
?18.85E6,1.9E6,.85E6,.3
 INPUT THE UNIDIRECTIONAL ALLOWABLES FOR EACH MATERIAL
 IN THE FOLLOWING ORDER:  T1, C1, T2, C2, SHEAR
?2.3E5,3.2E5,2.82E4,  23E4,1.73E4
 INPUT THE ANGULAR ORIENTATION OF EACH PLY
?0.,45.,-45.,90.
 INPUT THE THICKNESS OF EACH PLY
?.5,.2,.2,.1
 INPUT:  FAR FIELD STRESSES PX,PY,PXY, OFF AXIS ANGLE, BEARING STRESS
 AND BOLT LOADING ANGLE.
?10000.,500.,2500.,30.,35000.,10.
 INPUT WIDTH (0.0 FOR INFINITE PLATE)
?0.0
 INPUT BOLT DIAMETER, DEGREES BETWEEN OUTPUT, LOW RANGE, HIGH RANGE,
 STEP INCREMENT AND NUMBER OF STEPS DESIRED (7 MAX)
?.25,5.,0.,360.,.02,2
 INPUT THE NUMBER WHICH CORRESPONDS TO THE FAILURE CRITERIA
 YOU WISH TO USE
 1  MAXIMUM STRAIN
 2  MAXIMUM STRESS
 3  TSAI-HILL
 4  MODIFIED TSAI-WU
 5  HOFFMAN
?3
```

Input Stresses are Ratioed Uniformly Until First Ply Failure is Predicted

AUTOMATIC SEARCH FOR FAILURE (Output Option No. 10)

FAILURE STRESSES

PX	PY	PXY	P
17243.40	862.17	4310.85	60351.88

DIST	ANGLE	PLY	FAILURE NUMBER	FAILURE RATIOS		2	SHEAR
.020	335.00	0.00	.855		-.210	.469	.853
.020	335.00	45.00	.999		.811	-.181	.537
.020	335.00	-45.00	.730		-.400	.650	-.628
.020	335.00	90.00	1.000		.606	-.075	-.788

Indicates Ply Failure

Depicts Relative Magnitude of Stress Components to Failure Number

Failure Initiation Location Angle

User Specified Distance Away from Hole at Which Failure is Predicted

Note: The "search" is only done within the user specified "range" with an accuracy of 1/2 the "degrees between output" in locating failure initiation.

GP13-0115-219

Figure 12. General Loading Condition

SECTION VII

PROGRAM LISTING

```
C
C                 BOLTED JOINT STRESS FIELD MODEL (BJSFM)
C
C     THIS PROGRAM COMPUTES LAMINATE STRESS AND STRAIN DISTRIBUTIONS
C     AROUND LOADED AND UNLOADED FASTENER HOLES.  THE PRINCIPLE OF
C     SUPERPOSITION IS USED TO OBTAIN STRESS/STRAIN DISTRIBUTIONS
C     FOR A GENERAL APPLIED LOADING.  OPTIONAL FAILURE ANALYSIS
C     ROUTINES ALLOWS LAMINATE STRENGTH PREDICTIONS USING VARIOUS
C     MATERIAL FAILURE CRITERIA AND HYPOTHESES.  PROGRAM WAS
C     DEVELOPED BY J.M.OGONOWSKI OF MCDONNELL AIRCRAFT CO.,
C     ST.LOUIS, MISSOURI,
C
C
C
      PROGRAM BJSFM(INPUT=100,OUTPUT=150,TAPE105=INPUT,TAPE5=INPUT,
     1TAPE108=OUTPUT,TAPE6)
C
      COMMON/ONE/E1(3),E2(3),G12(3),V12(3)
      COMMON/TWO/IOUT(15),NUMPLY,NUMMAT,ANG(8),PLYTHK(8),MATID(8)
      COMMON/THREE/IANG,ILOW,IHIGH,STPINK,NUMSTP
      COMMON/FOUR/PX,PY,PXY,P,PW,ALPHA,BETA,DIA,CORRECT
      COMMON/FIVE/FXT(3),FXC(3),FYT(3),FYC(3),FXY(3),IFAIL
      COMMON/SIX/AI(3,3)
      COMMON/SEVEN/S(3,3)
      COMMON/EIGHT/STRESS(3,7,73),STRAIN(3,7,73)
      COMMON/NINE/STR1(8,7,73),STR2(8,7,73),STR12(8,7,73)
      INTEGER ANS,ANS2,YES
      REAL IANG,ILOW,IHIGH
C
      DATA YES/'YES'/,NO/'NO'/
C
C
   10 CONTINUE
      OUTPUT(6)'1DO YOU WANT INSTRUCTIONS?'
      READ(5,20)ANS
   20 FORMAT(A3)
C
      IF(ANS.EQ.YES) WRITE(6,30)
   30 FORMAT(' SELECT DESIRED OUTPUT FROM THE FOLLOWING CASES.'/,
     1'  1  CARPET PLOT DATA'/'  2  LAMINATE PROPERTIES'/'  3  ',
     2'LAMINATE STRESSES'/'  4  LAMINATE STRAINS'/'  5  CIRCUME',
     3'ERENTIAL & RADIAL STRESSES/STRAINS'/'  6  DISPLACEMENTS'/,
     4'  7  STRAINS PER PLY'/'  8  STRESSES PER PLY'/,
     5'  9  FAILURE CRITERIA PER PLY'/' 10  AUTOMATIC SEARCH FOR ',
     6'FAILURE')
C
      DO 40 L=1,15
      IOUT(L)=0
   40 CONTINUE
      READ(5,    )(IOUT(L),L=1,10)
C
      IF(ANS.EQ.YES) WRITE(6,50)
   50 FORMAT(' INPUT NUMBER OF DIFFERENT PLIES TO BE INPUT (8 MAX)',
     1' AND'/' NUMBER OF DIFFERENT MATERIALS (3 MAX)')
      READ(5,    )NUMPLY,NUMMAT
C
      IF(ANS.EQ.YES) WRITE(6,60)
   60 FORMAT(' INPUT THE UNIDIRECTIONAL MATERIAL PROPERTIES FOR ',
     1'EACH MATERIAL'/' IN THE FOLLOWING ORDER:  E1, E2, G12, ',
     2'POISSONS RATIO')
      READ(5,    )(E1(L),E2(L),G12(L),V12(L),L=1,NUMMAT)
C
```

```
C
      IF(ANS.EQ.YES.AND.PUTOUT(IOUT,9).GE.1.) WRITE(6,70)
   70 FORMAT(' INPUT THE UNIDIRECTIONAL ALLOWABLES FOR EACH ',
     1'MATERIAL'/' IN THE FOLLOWING ORDER:  T1, C1, T2, C2, SHEAR')
      IF(PUTOUT(IOUT,9).GE.1.) READ(5,    )(FXT(J),FXC(J),FYT(J),
     1FYC(J),FXY(J),J=1,NUMMAT)
C

C     INPUT ANGULAR ORIENTATION, THICKNESS AND MATERIAL
C     IDENTIFICATION PER PLY
C
      IF(ANS.EQ.YES) WRITE(6,80)
   80 FORMAT(' INPUT THE ANGULAR ORIENTATION OF EACH PLY')
      READ(5,    )(ANG(L),L=1,NUMPLY)
C
      IF(ANS.EQ.YES) WRITE(6,90)
   90 FORMAT(' INPUT THE THICKNESS OF EACH PLY')
      READ(5,    )(PLYTHK(J),J=1,NUMPLY)
  100 CONTINUE
C
      IF(NUMMAT.NE.1) GO TO 120
      DO 110 L=1,NUMPLY
      MATID(L)=1
  110 CONTINUE
      GO TO 140
  120 CONTINUE
C
      IF(ANS.EQ.YES) WRITE(6,130)
  130 FORMAT(' INPUT THE MATERIAL NUMBER FOR EACH PLY')
      READ(5,    )(MATID(L),L=1,NUMPLY)
  140 CONTINUE
      IF(PUTOUT(IOUT,3).EQ.0.0) GO TO 200
C
      IF(ANS.EQ.YES.AND.PUTOUT(IOUT,3).GE.1.) WRITE(6,150)
  150 FORMAT(' INPUT:  FAR FIELD STRESSES PX,PY,PXY, OFF AXIS ANGLE,',
     1' BEARING STRESS'/' AND BOLT LOADING ANGLE.')
      IF(PUTOUT(IOUT,3).GE.1.) READ(5,    ) PX,PY,PXY,BETA,P,ALPHA
C
      IF(ANS.EQ.YES.AND.P.NE.0.0) WRITE(6,160)
  160 FORMAT(' INPUT WIDTH (0.0 FOR INFINITE PLATE)')
      IF(PUTOUT(IOUT,3).GE.1..AND.P.NE.0.0) READ(5,    ) W
C
  170 CONTINUE
      IF(ANS.EQ.YES.AND.PUTOUT(IOUT,3).GE.1.) WRITE(6,180)
  180 FORMAT(' INPUT BOLT DIAMETER, DEGREES BETWEEN OUTPUT, LOW ',
     1'RANGE, HIGH RANGE,'/' STEP INCREMENT AND NUMBER OF STEPS',
     2' DESIRED (7 MAX)')
C
      IF(PUTOUT(IOUT,3).GE.1.) READ(5,    ) DIA,IANG,ILOW,IHIGH,
     1STPINK,NUMSTP
C
      IF(NUMSTP.GT.7) NUMSTP=7
      RANGE=(IHIGH-ILOW)/IANG
      IF(RANGE.GT.72) OUTPUT(6)' DEGREES BETWEEN OUTPUT TO SMALL; ',
     1' TRY AGAIN'
      IF(RANGE.GT.72) GO TO 170
C
      BL=P*DIA
      PW=0.0
      IF(P.NE.0.0.AND.W.NE.0.0) PW=BL/(2.0*W)
      WD=W/DIA
      IF(WD.LT.4.0.AND.W.NE.0.0) OUTPUT(6)' CAUTION:  WIDTH-TO-DIAMETER'
     1' RATIOS LESS THAN 4 GIVE ERRONEOUS RESULTS'
```

```
C
      IF(ANS.EQ.YES.AND.PUTOUT(IOUT,9).GE.1.) WRITE(6,190)
  190 FORMAT(' INPUT THE NUMBER WHICH CORRESPONDS TO THE ',
     1'FAILURE CRITERIA '/' YOU WISH TO USE'/' 1  MAXIMUM STRAIN'/,
     2' 2  MAXIMUM STRESS'/' 3  TSAI-HILL'/' 4  MODIFIED ',
     3'TSAI-WU'/' 5  HOFFMAN')
      IF(PUTOUT(IOUT,9).GE.1.) READ(5,    )IFAIL
C
      IF(PUTOUT(IOUT,10).EQ.2.) NUMSTP=2
  200 CONTINUE
C
C     CARPET PLOT ROUTINE
C
      IF(PUTOUT(IOUT,1).NE.2.) GO TO 240
      ANG1=ANG(1)
      ANG2=ANG(2)
      ANG3=ANG(3)
      ANG4=ANG(4)
      PLYT1=PLYTHK(1)
      PLYT2=PLYTHK(2)
      PLYT3=PLYTHK(3)
      PLYT4=PLYTHK(4)
      DO 280 JKI=1,11
      FORFIV=-.1
      DO 270 IJK=1,11
      ANG(1)=ANG1
      ANG(2)=ANG2
      ANG(3)=ANG3
      ANG(4)=ANG4
      PLYTHK(1)=PLYT1
      PLYTHK(2)=PLYT2
      PLYTHK(3)=PLYT3
      PLYTHK(4)=PLYT4
      NUMPLY=4
      PLYTHK(1)=1.1-JKI*.1
      FORFIV=FORFIV+.1
      CHECK=FORFIV+PLYTHK(1)
      IF(CHECK.GT.1.0) GO TO 280
      PLYTHK(2)=FORFIV/2.
      PLYTHK(3)=FORFIV/2.
      PLYTHK(4)=1.0-PLYTHK(1)-FORFIV
      I0=PLYTHK(1)*100.4
      I45=PLYTHK(2)*200.4
      I90=PLYTHK(4)*100.4
      IF(I0.NE.0) GO TO 210
      NUMPLY=NUMPLY-1
      PLYTHK(1)=PLYTHK(2)
      PLYTHK(2)=PLYTHK(3)
      PLYTHK(3)=PLYTHK(4)
      ANG(1)=ANG(2)
      ANG(2)=ANG(3)
      ANG(3)=ANG(4)
  210 CONTINUE
      IF(I45.NE.0) GO TO 220
      NUMPLY=NUMPLY-2
      IF(NUMPLY.EQ.1) PLYTHK(1)=PLYTHK(4)
      IF(NUMPLY.EQ.1) ANG(1)=ANG(4)
      PLYTHK(2)=PLYTHK(4)
      ANG(2)=ANG(4)
  220 CONTINUE
      IF(I90.EQ.0) NUMPLY=NUMPLY-1
      IF(PUTOUT(IOUT,1).EQ.2.) WRITE(6,230) I0,I45,I90
  230 FORMAT(//25X,'LAYUP:  ',I3,'/',I3,'/',I3)
```

```
C
C     BRANCHES TO OTHER SUBROUTINES
C
  240 IF(PUTOUT(IOUT,2).EQ.0.) GO TO 260
      ALPH=ALPHA
      CALL ABD(ALPH)
C
      CORRECT=1.0
      DUMMY=PUTOUT(IOUT,98)
  250 CONTINUE
      IF(PUTOUT(IOUT,3).EQ.0.) GO TO 260
      CALL LAMSTR
C
      IF(PUTOUT(IOUT,7).EQ.0.) GO TO 260
      CALL PLYSTR(IFAIL)
C
      IF(PUTOUT(IOUT,9).EQ.0.) GO TO 260
      CALL FAILURE
C
      IF(PUTOUT(IOUT,10).EQ.2.) DUMMY=PUTOUT(IOUT,99)
      IF(CORRECT.LT..999.OR.CORRECT.GT.1.001) GO TO 250
C
C
  260 CONTINUE
      DUMMY=PUTOUT(IOUT,98)
      IF(PUTOUT(IOUT,1).NE.2.) GO TO 290
C
  270 CONTINUE
  280 CONTINUE
  290 CONTINUE
C
      OUTPUT(6)' DO YOU WISH TO CONTINUE?'
      READ(5,300) ANS2
  300 FORMAT(A3)
      IF(ANS2.NE.NO) GO TO 10
C
C
C
      STOP
      END
C
C     ************************************************************
C
      FUNCTION PUTOUT(IOUT,IN)
      DIMENSION IOUT(15)
      PUTOUT=0.
      DO 10 J=1,15
      IF(IOUT(J).GE.IN) PUTOUT=1.
   10 CONTINUE
      DO 20 J=1,15
      IF(IOUT(J).EQ.IN) PUTOUT=2.
   20 CONTINUE
      IF(IN.EQ.98) DATA=0.0
      IF(IN.EQ.99) DATA=1.0
      IF(DATA.EQ.1.0.AND.IN.LT.10) PUTOUT=0.5
      RETURN
      END
```

```
C
C     ***********************************************************
C
      SUBROUTINE ABD (ALPHA)
C
C     CALCULATES LAMINATE PROPERTIES FROM LAMINA INPUT
C
      COMMON/ONE/E1(3),E2(3),G12(3),V12(3)
      COMMON/TWO/IOUT(15),NUMPLY,NUMMAT,ANG(8),PLYTHK(8),MATID(8)
      COMMON/SIX/AI(3,3)
      COMMON/SEVEN/S(3,3)
C
C
      DIMENSION V21(3),DIV(3),Q11(3),Q22(3),Q12(3),Q66(3),U1(3),
     1U2(3),U3(3),U4(3),U5(3),QBAR(8,3,3),ZZ(16),Z(16),Q(3,3),
     2AA(3,3),A(3,3)
C
C
C     REDUCED STIFFNESSES FOR EACH MATERIAL
C
      DO 10 M=1,NUMMAT
      V21(M)=E2(M)*V12(M)/E1(M)
      DIV(M)=1.-V12(M)*V21(M)
      Q11(M)=E1(M)/DIV(M)
      Q22(M)=E2(M)/DIV(M)
      Q12(M)=V12(M)*E2(M)/DIV(M)
      Q66(M)=G12(M)
   10 CONTINUE
C
C     INVARIANT PROPERTIES
C
      DO 20 M=1,NUMMAT
      U1(M)=(3.*Q11(M)+3.*Q22(M)+2.*Q12(M)+4.*Q66(M))/8.
      U2(M)=(Q11(M)-Q22(M))/2.
      U3(M)=(Q11(M)+Q22(M)-2.*Q12(M)-4.*Q66(M))/8.
      U4(M)=(Q11(M)+Q22(M)+6.*Q12(M)-4.*Q66(M))/8.
      U5(M)=(Q11(M)+Q22(M)-2.*Q12(M)+4.*Q66(M))/8.
   20 CONTINUE
C
      DO 30 I=1,3
      DO 30 J=1,3
      A(I,J)=0.
      AA(I,J)=0.
   30 CONTINUE
C
C     TRANSFORMED REDUCED STIFFNESSES PER PLY
C
      THICK=0.
      DO 40 L=1,NUMPLY
      DEG=ANG(L)*3.1415926535/180.0
      M=MATID(L)
      QBAR(L,1,1)=U1(M)+U2(M)*COS(2.*DEG)+U3(M)*COS(4.*DEG)
      QBAR(L,1,2)=U4(M)-U3(M)*COS(4.*DEG)
      QBAR(L,2,2)=U1(M)-U2(M)*COS(2.*DEG)+U3(M)*COS(4.*DEG)
      QBAR(L,1,3)=.5*U2(M)*SIN(2.*DEG)+U3(M)*SIN(4.*DEG)
      QBAR(L,2,3)=.5*U2(M)*SIN(2.*DEG)-U3(M)*SIN(4.*DEG)
      QBAR(L,3,3)=U5(M)-U3(M)*COS(4.*DEG)
      QBAR(L,2,1)=QBAR(L,1,2)
      QBAR(L,3,1)=QBAR(L,1,3)
      QBAR(L,3,2)=QBAR(L,2,3)
C
      THICK=PLYTHK(L)+THICK
      ZZ(L+1)=THICK
   40 CONTINUE
      Z(1)=-1.*THICK/2.0
```

```
C
C     CALCULATE A MATRIX
C
      DO 70 I=1,3
      DO 60 J=1,3
      DO 50 L=1,NUMPLY
      Z(L+1)=Z(1)+ZZ(L+1)
      ZA=Z(L+1)-Z(L)
C
      A(I,J)=A(I,J)+QBAR(L,I,J)*ZA
C
   50 CONTINUE
C
C     MATRIX Q AND QQ ARE DUMMY MATRICIES USED IN CALCULATIONS INVOLVING
C     THE MANIPULATION OF OTHER MATRICIES
C
      Q(I,J)=A(I,J)/THICK
   60 CONTINUE
   70 CONTINUE
C
C     COMPUTE A/THICK INVERSE MATRIX
C
      ISTEP=1
      CALL INVERSE(Q,AI)
C
C     LAMINATE MID-PLANE PROPERTIES
C
      EX1=1.0/AI(1,1)
      EY1=1.0/AI(2,2)
      VXY1=-EX1*AI(1,2)
      GXY1=1.0/AI(3,3)
C
      IF(PUTOUT(IOUT,2).EQ.2.) WRITE(6,80) EX1,EY1,GXY1,VXY1
   80 FORMAT(/25X,'LAMINATE PROPERTIES'/' EX = ',E9.3,2X,'EY = ',
     1E9.3,2X,'GXY = ',E9.3,2X,'VXY = ',F5.3)
C
C     CALCULATE MATERIAL PROPERTIES FOR OFF-AXIS BOLT LOAD
C
C     TRANSFORMED REDUCED STIFFNESSES PER PLY
C
      THICK=0.
      ALPHA=ALPHA*3.1415926535/180.0
      DO 90 L=1,NUMPLY
      DEG=ANG(L)*3.1415926535/180.0
      DEG=DEG-ALPHA
      M=MATID(L)
      QBAR(L,1,1)=U1(M)+U2(M)*COS(2.*DEG)+U3(M)*COS(4.*DEG)
      QBAR(L,1,2)=U4(M)-U3(M)*COS(4.*DEG)
      QBAR(L,2,2)=U1(M)-U2(M)*COS(2.*DEG)+U3(M)*COS(4.*DEG)
      QBAR(L,1,3)=.5*U2(M)*SIN(2.*DEG)+U3(M)*SIN(4.*DEG)
      QBAR(L,2,3)=.5*U2(M)*SIN(2.*DEG)-U3(M)*SIN(4.*DEG)
      QBAR(L,3,3)=U5(M)-U3(M)*COS(4.*DEG)
      QBAR(L,2,1)=QBAR(L,1,2)
      QBAR(L,3,1)=QBAR(L,1,3)
      QBAR(L,3,2)=QBAR(L,2,3)
C
      THICK=PLYTHK(L)+THICK
      ZZ(L+1)=THICK
   90 CONTINUE
      Z(1)=-1.*THICK/2.0
```

```
C
C     CALCULATE AA MATRIX
C
      DO 120 I=1,3
      DO 110 J=1,3
      DO 100 L=1,NUMPLY
      Z(L+1)=Z(1)+ZZ(L+1)
      ZA=Z(L+1)-Z(L)
C
      AA(I,J)=AA(I,J)+QBAR(L,I,J)*ZA
C
  100 CONTINUE
      Q(I,J)=AA(I,J)/THICK
  110 CONTINUE
  120 CONTINUE
C
C     COMPUTE AA/THICK INVERSE MATRIX
C
      ISTEP=4
      CALL INVERSE(Q,S)
C
C     OFF-AXIS LAMINATE PROPERTIES
C
      EX2=1.0/S(1,1)
      EY2=1.0/S(2,2)
      VXY2=-EX2*S(1,2)
      GXY2=1.0/S(3,3)
C
C
      RETURN
      END
C
C     ***************************************************************
C
      SUBROUTINE INVERSE (X,XI)
C
C     CALCULATES THE INVERSE OF A 3X3 MATRIX
C
      DIMENSION X(3,3), XI(3,3)
      COMMON ISTEP
C
C
      DET=(X(1,1)*X(2,2)*X(3,3))+(X(1,2)*X(2,3)*X(3,1))+
     1     (X(1,3)*X(2,1)*X(3,2))-(X(1,3)*X(2,2)*X(3,1))-
     2     (X(1,1)*X(2,3)*X(3,2))-(X(1,2)*X(2,1)*X(3,3))
C
      IF(DET.EQ.0.0) GO TO 10
C
      XI(1,1)=(X(2,2)*X(3,3)-X(2,3)*X(3,2))/DET
      XI(1,2)=(X(2,3)*X(3,1)-X(2,1)*X(3,3))/DET
      XI(1,3)=(X(2,1)*X(3,2)-X(2,2)*X(3,1))/DET
      XI(2,2)=(X(1,1)*X(3,3)-X(1,3)*X(3,1))/DET
      XI(2,3)=(X(1,2)*X(3,1)-X(1,1)*X(3,2))/DET
      XI(3,3)=(X(1,1)*X(2,2)-X(1,2)*X(2,1))/DET
      XI(2,1)=(X(3,2)*X(1,3)-X(1,2)*X(3,3))/DET
      XI(3,1)=(X(1,2)*X(2,3)-X(2,2)*X(1,3))/DET
      XI(3,2)=(X(2,1)*X(1,3)-X(1,1)*X(2,3))/DET
      GO TO 30
   10 PRINT 20,ISTEP
   20 FORMAT(' SUBROUTINE INVERSE CALCULATES A SINGULAR MATRIX ',
     1'AT STEP'I3)
   30 CONTINUE
      RETURN
      END
```

```
C
C     ***********************************************************
C
      SUBROUTINE LAMSTR
C
C     CALCULATES THE LAMINATE STRESSES AND STRAINS DUE TO A
C     GENERAL INPLANE LOADING WITH A BOLT LOAD
C
      COMMON/TWO/IOUT(15),NUMPLY,NUMMAT,ANG(8),PLYTHK(9),MATID(9)
      COMMON/THREE/IANG,ILOW,IHIGH,STPINK,NUMSTP
      COMMON/FOUR/PX,PY,PXY,P,PW,ALPHA,BETA,DIA,CORRECT
      COMMON/SIX/AI(3,3)
      COMMON/SEVEN/S(3,3)
      COMMON/EIGHT/STRESS(3,7,73),STRAIN(3,7,73)
C
      REAL IANG,ILOW,IHIGH
      DIMENSION STR(3,7,73),U(7,73),V(7,73),UX(7,73),VY(7,73)
C
      PX=CORRECT*PX
      PY=CORRECT*PY
      PXY=CORRECT*PXY
      P=CORRECT*P
      PW=CORRECT*PW
C
C
      PI=3.14159265
      NUMPT=((IHIGH-ILOW)/IANG)+1
      DO 10 J=1,NUMSTP
      DO 10 K=1,NUMPT
      U(J,K)=0.0
      V(J,K)=0.0
      DO 10 I=1,3
      STRESS(I,J,K)=0.0
      STRAIN(I,J,K)=0.0
   10 CONTINUE
C
C     CALCULATE UNLOADED HOLE STRESSES
C
      IF(PX.EQ.0.0) GO TO 20
      BETA0=BETA
      CALL UNLODED(PX,DIA,AI,BETA0,STRESS,U,V)
   20 CONTINUE
C
      IF(PY.EQ.0.0) GO TO 40
      BETA90=BETA+90.0
      CALL UNLODED(PY,DIA,AI,BETA90,STR,UX,VY)
      DO 30 J=1,NUMSTP
      DO 30 K=1,NUMPT
      U(J,K)=U(J,K)+UX(J,K)
      V(J,K)=V(J,K)+VY(J,K)
      DO 30 I=1,3
      STRESS(I,J,K)=STRESS(I,J,K)+STR(I,J,K)
   30 CONTINUE
C
   40 CONTINUE
      IF(PXY.EQ.0.0) GO TO 70
      BETA45=BETA+45.0
      CALL UNLODED(PXY,DIA,AI,BETA45,STR,UX,VY)
      DO 50 J=1,NUMSTP
      DO 50 K=1,NUMPT
      U(J,K)=U(J,K)+UX(J,K)
      V(J,K)=V(J,K)+VY(J,K)
      DO 50 I=1,3
      STRESS(I,J,K)=STRESS(I,J,K)+STR(I,J,K)
   50 CONTINUE
```

```
C
      BETA45=BETA-45.0
      PXYN=-PXY
      CALL UNLODED(PXYN,DIA,AI,BETA45,STR,UX,VY)
      DO 60 J=1,NUMSTP
      DO 60 K=1,NUMPT
      U(J,K)=U(J,K)+UX(J,K)
      V(J,K)=V(J,K)+VY(J,K)
      DO 60 I=1,3
      STRESS(I,J,K)=STRESS(I,J,K)+STR(I,J,K)
   60 CONTINUE
C
   70 CONTINUE
C
C     CALCULATE LOADED HOLE STRESSES
C
      IF(P.EQ.0.0) GO TO 100
      ALPHAO=ALPHA
      PB=P
      CALL LOADED(PB,DIA,S,ALPHAO,STR,UX,VY)
      DO 80 J=1,NUMSTP
      DO 80 K=1,NUMPT
      U(J,K)=U(J,K)+UX(J,K)
      V(J,K)=V(J,K)+VY(J,K)
      DO 80 I=1,3
      STRESS(I,J,K)=STRESS(I,J,K)+STR(I,J,K)
   80 CONTINUE
C
      ALPHAO=ALPHA
      CALL UNLODED(PW,DIA,AI,ALPHAO,STR,UX,VY)
      DO 90 J=1,NUMSTP
      DO 90 K=1,NUMPT
      U(J,K)=U(J,K)+UX(J,K)
      V(J,K)=V(J,K)+VY(J,K)
      DO 90 I=1,3
      STRESS(I,J,K)=STRESS(I,J,K)+STR(I,J,K)
   90 CONTINUE
  100 CONTINUE
C
      IF(PUTOUT(IOUT,3).EQ.2.) WRITE(6,110)
  110 FORMAT(///28X,'LAMINATE STRESSES'//'  DIST    ANGLE  X STRESS',
     1'    Y STRESS     SHEAR        MAX.        MIN.     DIRECTION'/,
     239X,'STRESS     PRINCIPAL  PRINCIPAL')
```

```
C
C     CALCULATE PRINCIPAL STRESSES
C
      IF(PUTOUT(IOUT,3).NE.2.) GO TO 140
      DO 130 JJ=1,NUMSTP
      DO 130 NN=1,NUMPT
      PRINA=(STRESS(1,JJ,NN)-STRESS(2,JJ,NN))*(STRESS(1,JJ,NN)-
     1       STRESS(2,JJ,NN))/4.
      PRINA=SQRT(PRINA+STRESS(3,JJ,NN)*STRESS(3,JJ,NN))
      PRIN1=(STRESS(1,JJ,NN)+STRESS(2,JJ,NN))/2.+PRINA
      PRIN2=(STRESS(1,JJ,NN)+STRESS(2,JJ,NN))/2.-PRINA
      TSTS=STRESS(1,JJ,NN)-STRESS(2,JJ,NN)
      DIRCT=0.
      IF(TSTS.NE.0.) DIRCT=.5*ATAN(2.*STRESS(3,JJ,NN)/TSTS)
      DIRCT=180.*DIRCT/3.1415926535
C
      IF(PUTOUT(IOUT,3).NE.2.) GO TO 140
      ANGLE=(NN-1)*IANG+ILOW
      DIST=(JJ-1)*STPINK
      WRITE(6,120) DIST,ANGLE,STRESS(1,JJ,NN),STRESS(2,JJ,NN),
     1STRESS(3,JJ,NN),PRIN1,PRIN2,DIRCT
  120 FORMAT(F6.3,F8.2,5F11.2,F8.2)
  130 CONTINUE
  140 CONTINUE
C
      IF(PUTOUT(IOUT,4).EQ.2.) WRITE(6,150)
  150 FORMAT(///28X,'LAMINATE STRAINS'//'  DIST   ANGLE  X STRAIN',
     1'   Y STRAIN    SHEAR       MAX.       MIN.    DIRECTION'/,
     239X,'STRAIN    PRINCIPAL  PRINCIPAL')
C
C     CALCULATE LAMINATE STRAINS
C
      DO 160 JJ=1,NUMSTP
      DO 160 NN=1,NUMPT
      DO 160 KK=1,3
      DO 160 MM=1,3
      STRAIN(KK,JJ,NN)=AI(KK,MM)*STRESS(MM,JJ,NN)+STRAIN(KK,JJ,NN)
  160 CONTINUE
C
C     CALCULATE PRINCIPAL STRAINS
C
      IF(PUTOUT(IOUT,4).NE.2.) GO TO 190
      DO 180 JJ=1,NUMSTP
      DO 180 NN=1,NUMPT
      PRINA=(STRAIN(1,JJ,NN)-STRAIN(2,JJ,NN))*(STRAIN(1,JJ,NN)-
     1       STRAIN(2,JJ,NN))/4.
      PRINA=SQRT(PRINA+STRAIN(3,JJ,NN)*.25*STRAIN(3,JJ,NN))
      PRIN1=(STRAIN(1,JJ,NN)+STRAIN(2,JJ,NN))/2.+PRINA
      PRIN2=(STRAIN(1,JJ,NN)+STRAIN(2,JJ,NN))/2.-PRINA
      TSTS=STRAIN(1,JJ,NN)-STRAIN(2,JJ,NN)
      DIRCT=0.
      IF(TSTS.NE.0.) DIRCT=.5*ATAN(2.*STRAIN(3,JJ,NN)/TSTS)
      DIRCT=180.*DIRCT/3.1415926535
      DIST=(JJ-1)*STPINK
C
      ANGLE=(NN-1)*IANG+ILOW
      WRITE(6,170) DIST,ANGLE,STRAIN(1,JJ,NN),STRAIN(2,JJ,NN),
     1STRAIN(3,JJ,NN),PRIN1,PRIN2,DIRCT
  170 FORMAT(F6.3,F8.2,5F11.6,F8.2)
  180 CONTINUE
  190 CONTINUE
```

```
C
C     CALCULATE CIRCUMFERENTIAL AND RADIAL STRESSES & STRAINS
C
      IF(PUTOUT(IOUT,5).EQ.2.) WRITE(6,200)
  200 FORMAT(///15X,'CIRCUMFERENTIAL AND RADIAL STRESSES & STRAINS',
     1//'  DIST     ANGLE     THETA      RADIAL     SHEAR     THETA',
     2'     RADIAL   SHEAR'/21X,'STRESS     STRESS     ',
     3'STRESS    STRAIN   STRAIN   STRAIN')
      IF(PUTOUT(IOUT,5).NE.2.) GO TO 230
      DO 220 J=1,NUMSTP
      DO 220 N=1,NUMPT
      ENERGY=.5*(STRESS(1,J,N)*STRAIN(1,J,N)+STRESS(2,J,N)*
     1        STRAIN(2,J,N)+STRESS(3,J,N)*STRAIN(3,J,N))
      ANGLE=(N-1)*IANG+ILOW
      D=ANGLE*PI/180.0
      DIST=(J-1)*STPINK
      RADSTS=STRESS(1,J,N)*COS(D)*COS(D)+STRESS(2,J,N)*SIN(D)*
     1        SIN(D)+2.*STRESS(3,J,N)*SIN(D)*COS(D)
      CIRSTS=STRESS(1,J,N)*SIN(D)*SIN(D)+STRESS(2,J,N)*COS(D)*
     1        COS(D)-2.*STRESS(3,J,N)*SIN(D)*COS(D)
      SHRSTS=-1.*STRESS(1,J,N)*SIN(D)*COS(D)+STRESS(2,J,N)*SIN(D)*
     1        COS(D)+STRESS(3,J,N)*(COS(D)*COS(D)-SIN(D)*SIN(D))
      RADSTN=STRAIN(1,J,N)*COS(D)*COS(D)+STRAIN(2,J,N)*SIN(D)*
     1        SIN(D)+STRAIN(3,J,N)*SIN(D)*COS(D)
      CIRSTN=STRAIN(1,J,N)*SIN(D)*SIN(D)+STRAIN(2,J,N)*COS(D)*
     1        COS(D)-STRAIN(3,J,N)*SIN(D)*COS(D)
      SHRSTN=-1.*STRAIN(1,J,N)*SIN(D)*COS(D)+STRAIN(2,J,N)*SIN(D)*
     1        COS(D)+STRAIN(3,J,N)*(COS(D)*COS(D)-SIN(D)*SIN(D))
      WRITE(6,210) DIST,ANGLE,CIRSTS,RADSTS,SHRSTS,CIRSTN,RADSTN,
     1             SHRSTN
  210 FORMAT(F6.3,F10.2,F12.2,2F11.2,3F9.6)
  220 CONTINUE
  230 CONTINUE
C
C     OUTPUT DISPLACEMENTS
C
      D3=3.0*DIA
      DISP=DIA/2.0+NUMSTP*STPINK
      IF(PUTOUT(IOUT,6).EQ.2.0.AND.P.NE.0.0.AND.DISP.GT.D3) OUTPUT(6)
     1' CAUTION:  DISPLACEMENTS AT POINTS GREATER THAN 3D AWAY ',
     2' FROM THE HOLE MAY BE IN ERROR'
      IF(PUTOUT(IOUT,6).EQ.2.) WRITE(6,240)
  240 FORMAT(///20X,'DISPLACEMENTS'//'   DIST     ANGLE'10X,'U'10X,'V')
      IF(PUTOUT(IOUT,6).NE.2.) GO TO 270
      DO 260 J=1,NUMSTP
      DO 260 K=1,NUMPT
      ANGLE=(K-1)*IANG+ILOW
      DIST=(J-1)*STPINK
      WRITE(6,250) DIST,ANGLE,U(J,K),V(J,K)
  250 FORMAT(F7.3,F10.2,F13.6,F12.6)
  260 CONTINUE
  270 CONTINUE
      RETURN
      END
```

```
C
C       ***********************************************************
C
        SUBROUTINE UNLODED(P,DIA,AI,BETA,STRESS,U,V)
C
C       CALCULATE STRESS DISTRIBUTION AROUND AN UNLOADED HOLE
C
        COMMON/THREE/IANG,ILOW,IHIGH,STPINK,NUMSTP
        REAL IANG,ILOW,IHIGH
        DIMENSION STRESS(3,7,73),U(7,73),V(7,73),AI(3.3)
        DIMENSION WORK(5),COEF(5),RTR(4),RTI(4)
        COMPLEX R1,R2,COMPLX,XI1,XI2,COM1,COM2,DEN1,DEN2,PHI1,PHI2
        COMPLEX Z,Z1,Z2,P1,P2,Q1,Q2
C
C       CALCULATE COMPLEX PARAMETERS
C
C       INITIALIZE COMPLEX NUMBER:  SQRT(-1.)
C
        COMPLX=(0.,1.)
        NUMCO=4
        COEF(1)=AI(2,2)*1000000
        COEF(2)=-2.*AI(2,3)*1000000
        COEF(3)=(2.*AI(1,2)+AI(3,3))*1000000
        COEF(4)=-2.*AI(1,3)*1000000
        COEF(5)=AI(1,1)*1000000
        CALL ROOTS(COEF,WORK,NUMCO,RTR,RTI,IE)
        R1=RTR(1)+COMPLX*RTI(1)
        IF(RTI(2).GT.0.0) R1=RTR(2)+COMPLX*RTI(2)
        R2=RTR(3)+COMPLX*RTI(3)
        IF(RTI(4).GT.0.0) R2=RTR(4)+COMPLX*RTI(4)
        P1=AI(1,1)*R1*R1+AI(1,2)-AI(1,3)*R1
        P2=AI(1,1)*R2*R2+AI(1,2)-AI(1,3)*R2
        Q1=AI(1,2)*R1+AI(2,2)/R1-AI(2,3)
        Q2=AI(1,2)*R2+AI(2,2)/R2-AI(2,3)
C
C
        PI=3.1415926535
        BETA=BETA*PI/180.0
C
        NUMPT=((IHIGH-ILOW)/IANG)+1
C
        DO 20 JJ=1,NUMSTP
        DO 10 NN=1,NUMPT
C
        U(JJ,NN)=0.0
        V(JJ,NN)=0.0
        NNN=NN-1
        JJJ=JJ-1
C
        THETA=(NN*IANG+ILOW)*PI/180.0
        RADIUS=JJJ*STPINK+DIA/2.0
C
C       CALCULATE X & Y COORDINATES OF POINTS AROUND UNLOADED HOLE
C
        X=RADIUS*COS(THETA)
        Y=RADIUS*SIN(THETA)
C
C       CALCULATE LOCATION PARAMETERS FOR UNLOADED HOLE EQUATIONS
C
        Z1=X+R1*Y
        Z2=X+R2*Y
        Z=X+COMPLX*Y
C
```

```
C     MAPPING FUNCTION
C
      XI1=CSQRT(Z1*Z1-DIA*DIA/4.-R1*R1*DIA*DIA/4.)
      XI2=CSQRT(Z2*Z2-DIA*DIA/4.-R2*R2*DIA*DIA/4.)
C
C     CHOOSE CORRECT SIGN OF CSQRT
C
      XI1=Z1/XI1
      XI2=Z2/XI2
C
      IF(REAL(XI1).LT.-.00001) XI1=-1.*XI1
      IF(REAL(XI2).LT.-.00001) XI2=-1.*XI2
C
      XI1=1.-XI1
      XI2=1.-XI2
C
C     CALCULATE PHI PRIME
C
      COM1=R2*SIN(2.*BETA)+2.*COS(BETA)*COS(BETA)+COMPLX*(2.*R2*
     1     SIN(BETA)*SIN(BETA)+SIN(2.*BETA))
      COM2=R1*SIN(2.*BETA)+2.*COS(BETA)*COS(BETA)+COMPLX*(2.*R1*
     1     SIN(BETA)*SIN(BETA)+SIN(2.*BETA))
C
      DEN1=2.*DIA*(R1-R2)*(1.+COMPLX*R1)
      DEN2=2.*DIA*(R1-R2)*(1.+COMPLX*R2)
C
      PHI1=-COMPLX*P*DIA*COM1*XI1/(2.*DEN1)
      PHI2=COMPLX*P*DIA*COM2*XI2/(2.*DEN2)
C
C     CALCULATE STRESSES AROUND HOLE
C
      STRESS(1,JJ,NN)=P*COS(BETA)*COS(BETA)+2.*REAL(R1*R1*PHI1+
     1                R2*R2*PHI2)
      STRESS(2,JJ,NN)=P*SIN(BETA)*SIN(BETA)+2.*REAL(PHI1+PHI2)
      STRESS(3,JJ,NN)=P*SIN(BETA)*COS(BETA)-2.*REAL(R1*PHI1+
     1                R2*PHI2)
C
C     CALCULATE DISPLACEMENTS
C
      XI1=1.-XI1
      XI2=1.-XI2
C
      XI1=Z1/XI1
      XI2=Z2/XI2
C
      DEN1=16.*(R1-R2)*(Z1+XI1)
      DEN2=16.*(R1-R2)*(Z2+XI2)
C
      PHI1=-P*DIA*DIA*(COMPLX+R1)*COM1/DEN1
      PHI2=P*DIA*DIA*(COMPLX+R2)*COM2/DEN2
C
      U(JJ,NN)=2.*REAL(P1*PHI1+P2*PHI2)
      V(JJ,NN)=2.*REAL(Q1*PHI1+Q2*PHI2)
C
   10 CONTINUE
   20 CONTINUE
C
C
      RETURN
      END
```

```
C
C     ************************************************************
C
      SUBROUTINE LOADED(P,DIA,S,ALPHA,STRESS,U,V)
C
C     CALCULATES STRESS DISTRIBUTION AROUND A LOADED HOLE
C     ASSUMING A COSINE BOLT LOAD DISTRIBUTION
C
      COMMON/TWO/IOUT(15),NUMPLY,NUMMAT,ANG(8),PLYTHK(8),MATID(8)
      COMMON/THREE/IANG,ILOW,IHIGH,STPINK,NUMSTP
C
      REAL IANG,ILOW,IHIGH
      COMPLEX R1,R2,COMPLX,Z,Z1,Z2,CPOS(50),CNEG(50),CZERO,CM,
     1AK1,AK2,XI1,XI2,PHI1,PHI2,COM1,COM2,XXI1,XXI2
      COMPLEX CHECK1,CHECK2,P1,P2,Q1,Q2
C
C
      COMPLEX A1(50),A2(50)
      DIMENSION AMATRX(4,4),BMATRX(4,4),STRESS(3,7,73)
      DIMENSION U(7,73),V(7,73),S(3,3)
      DIMENSION WORK(5),COEF(5),RTR(4),RTI(4)
C
C     INITIALIZE COMPLEX NUMBER:  SQRT(-1.)
C
      COMPLX=(0.,1.)
C
C      CALCULATE COMPLEX PARAMETERS
C
      NUMCO=4
      COEF(1)=S(2,2)*1000000
      COEF(2)=-2.*S(2,3)*1000000
      COEF(3)=(2.*S(1,2)+S(3,3))*1000000
      COEF(4)=-2.*S(1,3)*1000000
      COEF(5)=S(1,1)*1000000
      CALL ROOTS(COEF,WORK,NUMCO,RTR,RTI,IE)
      R1=RTR(1)+COMPLX*RTI(1)
      IF(RTI(2).GT.0.0) R1=RTR(2)+COMPLX*RTI(2)
      R2=RTR(3)+COMPLX*RTI(3)
      IF(RTI(4).GT.0.0) R2=RTR(4)+COMPLX*RTI(4)
C
      P1=S(1,1)*R1*R1+S(1,2)-S(1,3)*R1
      P2=S(1,1)*R2*R2+S(1,2)-S(1,3)*R2
      Q1=S(1,2)*R1+S(2,2)/R1-S(2,3)
      Q2=S(1,2)*R2+S(2,2)/R2-S(2,3)
C
C
C
      PI=3.1415926535
C
      THICK=0.
      DO 10 N=1,NUMPLY
      THICK=THICK+PLYTHK(N)
   10 CONTINUE
      P=4.0*P/PI
```

```
C
C     A COSINE LOAD DISTRIBUTION OVER HALF OF HOLE AT AN ANGLE
C     ALPHA TO X AXIS
C
C     CALCULATE COMPLEX CONSTANTS
C
      PI2=PI/2.0
      M=-1
   20 CONTINUE
      M=M+1
      IF(M.EQ.1) GO TO 40
   30 CONTINUE
      C1=SIN((M-1)*PI2)/(2*(M-1))
      C2=SIN((M+1)*PI2)/(2*(M+1))
      C3=SIN((M-1)*(-PI2))/(2*(M-1))
      C4=SIN((M+1)*(-PI2))/(2*(M+1))
      C5=COS((M-1)*PI2)/(2*(M-1))
      C6=COS((M+1)*PI2)/(2*(M+1))
      C7=COS((M-1)*(-PI2))/(2*(M-1))
      C8=COS((M+1)*(-PI2))/(2*(M+1))
      CM=P*((C1+C2-C3-C4)-COMPLX*(-C5-C6+C7+C8))/(2.0*PI)
      IF(M.EQ.0) CZERO=CM
      IF(M.GT.1) CPOS(M)=CM
      IF(M.LT.-1) MN=-1*M
      IF(M.LT.-1) CNEG(MN)=CM
      IF(M.LE.0) GO TO 50
      M=-1*M
      GO TO 30
   40 CONTINUE
      C1=PI2
      C2=SIN(2.*(PI2))/4.
      C3=SIN(2.*(-PI2))/4.
      C4=SIN(PI2)*SIN(PI2)/2.
      C5=SIN(-PI2)*SIN(-PI2)/2.
      CM=P*((C1+C2-C3)-M*COMPLX*(C4-C5))/(2.*PI)
      IF(M.EQ.1) CPOS(1)=CM
      IF(M.EQ.-1) CNEG(1)=CM
      IF(M.EQ.-1) GO TO 50
      M=-1*M
      GO TO 40
   50 CONTINUE
      M=IABS(M)
      IF(M.LT.49) GO TO 20
C
C     TRANSFORM COMPLEX PARAMETERS INTO REAL AND IMAGINARY PARTS
C
      S1=REAL(R1)
      S2=REAL(R2)
      T1=AIMAG(R1)
      T2=AIMAG(R2)
```

```
C     EQUATING COEFFICIENTS AND SOLVING FOR CONSTANTS
C
      DO 80 M=1,45
      MN=M-1
      IF(MN.NE.0) GO TO 60
      BMATRX(1)=REAL(-CZERO*DIA/2.)
      BMATRX(2)=AIMAG(-CZERO*DIA/2.)
      GO TO 70
   60 CONTINUE
      BMATRX(1)=REAL(-CPOS(MN)*DIA/(2.*(MN+1)))
      BMATRX(2)=AIMAG(-CPOS(MN)*DIA/(2.*(MN+1)))
   70 CONTINUE
      MN=M+1
      MNEG=-1*MN
      BMATRX(3)=REAL(-CNEG(MN)*DIA/(2.*(MNEG+1)))
      BMATRX(4)=AIMAG(-CNEG(MN)*DIA/(2.*(MNEG+1)))
      AMATRX(1,1)=T1+1.
      AMATRX(1,2)=S1
      AMATRX(1,3)=T2+1.
      AMATRX(1,4)=S2
      AMATRX(2,1)=S1
      AMATRX(2,2)=-T1-1.
      AMATRX(2,3)=S2
      AMATRX(2,4)=-T2-1.
      AMATRX(3,1)=1.-T1
      AMATRX(3,2)=-S1
      AMATRX(3,3)=1.-T2
      AMATRX(3,4)=-S2
      AMATRX(4,1)=S1
      AMATRX(4,2)=1.-T1
      AMATRX(4,3)=S2
      AMATRX(4,4)=1.-T2
      CALL SIMULT(AMATRX,BMATRX,4,J)
      IF(J.EQ.1)OUTPUT(6)' SIMULT CALCULATES A SINGULAR SET OF EQS.'
      A1(M)=BMATRX(1)+COMPLX*BMATRX(2)
      A2(M)=BMATRX(3)+COMPLX*BMATRX(4)
   80 CONTINUE
C
      PX=2.*PI*AIMAG(COMPLX*DIA*CNEG(1)/2.)
      PY=2.*PI*REAL(COMPLX*DIA*CNEG(1)/2.)
C
      AMATRX(1,1)=T1
      AMATRX(1,2)=S1
      AMATRX(1,3)=T2
      AMATRX(1,4)=S2
      AMATRX(2,1)=0.0
      AMATRX(2,2)=1.0
      AMATRX(2,3)=0.0
      AMATRX(2,4)=1.0
      AMATRX(3,1)=2.*S1*T1
      AMATRX(3,2)=S1*S1-T1*T1
      AMATRX(3,3)=2.*S2*T2
      AMATRX(3,4)=S2*S2-T2*T2
      AMATRX(4,1)=-T1/(S1*S1+T1*T1)
      AMATRX(4,2)=S1/(S1*S1+T1*T1)
      AMATRX(4,3)=-T2/(S2*S2+T2*T2)
      AMATRX(4,4)=S2/(S2*S2+T2*T2)
      BMATRX(1)=PX/(4.*PI)
      BMATRX(2)=-PY/(4.*PI)
      BMATRX(3)=(S(1,2)*PY+S(1,3)*PX)/(4.*PI*S(1,1))
      BMATRX(4)=-(S(1,2)*PX+S(2,3)*PY)/(4.*PI*S(2,2))
      CALL SIMULT(AMATRX,BMATRX,4,J)
      IF(J.EQ.1)OUTPUT(6)' SIMULT CALCULATES A SINGULAR SET OF EQS.'
C
      AK1=BMATRX(1)+COMPLX*BMATRX(2)
      AK2=BMATRX(3)+COMPLX*BMATRX(4)
```

```
C
      NUMPT=((IHIGH-ILOW)/IANG)+1
      ALPHA=-ALPHA*PI/180.0
      ALPH=-ALPHA
      DO 150 JJ=1,NUMSTP
      DO 140 NN=1,NUMPT
C
      U(JJ,NN)=0.0
      V(JJ,NN)=0.0
      NNN=NN-1
      JJJ=JJ-1
      THETA=(NNN*IANG+ILOW)*PI/180.0
      RADIUS=JJJ*STPINK+DIA/2.0
C
C     CALCULATE X AND Y COORDINATES OF POINTS AROUND LOADED HOLE
C
      X=RADIUS*COS(THETA+ALPHA)
      Y=RADIUS*SIN(THETA+ALPHA)
C
C     CALCULATE PARAMETERS FOR LOADED HOLE EQUATIONS
C
      Z1=X+R1*Y
      Z2=X+R2*Y
      Z=X+COMPLX*Y
C
C     MAPPING FUNCTION
C
C
      XXI1=CSQRT(Z1*Z1-DIA*DIA/4.-R1*R1*DIA*DIA/4.)
      XXI2=CSQRT(Z2*Z2-DIA*DIA/4.-R2*R2*DIA*DIA/4.)
C
C     CHOOSE CORRECT SIGN OF CSQRT
C
   90 CONTINUE
      XI1=Z1+XXI1
      XI2=Z2+XXI2
      XI1=2.*XI1/(DIA*(1.-COMPLX*R1))
      XI2=2.*XI2/(DIA*(1.-COMPLX*R2))
      COX1=REAL(XI1)*REAL(XI1)+AIMAG(XI1)*AIMAG(XI1)
      COX2=REAL(XI2)*REAL(XI2)+AIMAG(XI2)*AIMAG(XI2)
      IF(COX1.GE..99999) GO TO 100
      XXI1=-XXI1
      GO TO 90
  100 CONTINUE
      IF(COX2.GE..99999) GO TO 110
      XXI2=-XXI2
      GO TO 90
  110 CONTINUE
      XXI1=XI1
      XXI2=XI2
C
C     CALCULATE PHI PRIME
C
      COM1=(0.,0.)
      COM2=(0.,0.)
      DO 120 M=1,45
      COM1=COM1+M*A1(M)*XI1**(-1*M)
      COM2=COM2+M*A2(M)*XI2**(-1*M)
  120 CONTINUE
```

```
C
C     CHECK SIGN OF CSQRT
C
      XI1=CSQRT(Z1*Z1-DIA*DIA/4.-DIA*DIA*R1*R1/4.)
      XI2=CSQRT(Z2*Z2-DIA*DIA/4.-DIA*DIA*R2*R2/4.)
      CHECK1=Z1/XI1
      CHECK2=Z2/XI2
      IF(REAL(CHECK1).LT.-.00001) XI1=-1.*XI1
      IF(REAL(CHECK2).LT.-.00001) XI2=-1.*XI2
      PHI1=(AK1-COM1)/XI1
      PHI2=(AK2-COM2)/XI2
C
C     CALCULATE STRESS COMPONENTS IN LAMINATE AT COORDINATES X,Y
C
      STRX=2.*REAL(R1*R1*PHI1+R2*R2*PHI2)
      STRY=2.*REAL(PHI1+PHI2)
      STRXY=-2.*REAL(R1*PHI1+R2*PHI2)
      STRESS(1,JJ,NN)=STRX*COS(ALPH)*COS(ALPH)+STRY*SIN(ALPH)*
     1                SIN(ALPH)-2.*STRXY*SIN(ALPH)*COS(ALPH)
      STRESS(2,JJ,NN)=STRX*SIN(ALPH)*SIN(ALPH)+STRY*COS(ALPH)*
     1                COS(ALPH)+2.*STRXY*SIN(ALPH)*COS(ALPH)
      STRESS(3,JJ,NN)=STRX*SIN(ALPH)*COS(ALPH)-STRY*SIN(ALPH)*
     1                COS(ALPH)+STRXY*(COS(ALPH)*COS(ALPH)-
     2                SIN(ALPH)*SIN(ALPH))
C
C     CALCULATE DISPLACEMENTS
C
      XI1=XXI1
      XI2=XXI2
      COM1=(0.,0.)
      COM2=(0.,0.)
      DO 130 M=1,45
      COM1=COM1+A1(M)*XI1**(-1*M)
      COM2=COM2+A2(M)*XI2**(-1*M)
  130 CONTINUE
      XXI1=CLOG(XI1)
      XXI2=CLOG(XI2)
      PHI1=AK1*XXI1+COM1
      PHI2=AK2*XXI2+COM2
      U(JJ,NN)=2.*REAL(P1*PHI1+P2*PHI2)
      V(JJ,NN)=2.*REAL(Q1*PHI1+Q2*PHI2)
C
  140 CONTINUE
  150 CONTINUE
C
      RETURN
      END
```

```
C
C     ************************************************************
C
      SUBROUTINE PLYSTR(IFAIL)
C
C     TRANSFORMS LAMINATE STRAINS TO PLY STRESSES/STRAINS BY ASSUMING
C     CONSTANT STRAIN THROUGH THE THICKNESS
C
      COMMON/ONE/E1(3),E2(3),G12(3),V12(3)
      COMMON/TWO/IOUT(15),NUMPLY,NUMMAT,ANG(8),PLYTHK(8),MATID(8)
      COMMON/THREE/IANG,ILOW,IHIGH,STPINK,NUMSTP
      COMMON/EIGHT/STRESS(3,7,73),STRAIN(3,7,73)
      COMMON/NINE/STR1(8,7,73),STR2(8,7,73),STR12(8,7,73)
      REAL IANG,ILOW,IHIGH
C
C
C     STRAINS PER PLY
C
      MOVE=0
      NUMPT=((IHIGH-ILOW)/IANG)+1
      IF(PUTOUT(IOUT,7).EQ.2.) WRITE(6,10)
   10 FORMAT(///20X,'STRAINS PER PLY',//'  DIST   ANGLE     PLY',
     1'   STRAIN 1    STRAIN 2   SHEAR STRAIN'/)
   20 CONTINUE
      DO 40 JJ=1,NUMSTP
      DO 40 NN=1,NUMPT
      DO 40 L=1,NUMPLY
      D=ANG(L)*3.1415926535/180.0
      STRANX=STRAIN(1,JJ,NN)
      STRANY=STRAIN(2,JJ,NN)
      GAMA=STRAIN(3,JJ,NN)
C
      STRAN1=STRANX*COS(D)*COS(D)
      STRAN2=STRANY*SIN(D)*SIN(D)
      GAMA12=GAMA*SIN(D)*COS(D)
      STR1(L,JJ,NN)=STRAN1+STRAN2+GAMA12
      STRAN1=STRANX*SIN(D)*SIN(D)
      STRAN2=STRANY*COS(D)*COS(D)
      GAMA12=-1.*GAMA*SIN(D)*COS(D)
      STR2(L,JJ,NN)=STRAN1+STRAN2+GAMA12
      STRAN1=-2.*STRANX*SIN(D)*COS(D)
      STRAN2=2.*STRANY*SIN(D)*COS(D)
      GAMA12=GAMA*COS(D)*COS(D)-GAMA*SIN(D)*SIN(D)
      STR12(L,JJ,NN)=STRAN1+STRAN2+GAMA12
C
      ANGLE=(NN-1)*IANG+ILOW
      DIST=(JJ-1)*STPINK
      IF(PUTOUT(IOUT,7).EQ.2.) WRITE(6,30)DIST,ANGLE,ANG(L),
     1STR1(L,JJ,NN),STR2(L,JJ,NN),STR12(L,JJ,NN)
   30 FORMAT(F6.3,2F8.2,3F12.6)
C
C
C
C
   40 CONTINUE
      IF(MOVE.EQ.1) GO TO 80
```

```
C
C     STRESSES PER PLY
C
      IF(PUTOUT(IOUT,8).EQ.2.) WRITE(6,50)
   50 FORMAT(///20X,'STRESSES PER PLY',//'  DIST   ANGLE     PLY',
     1'   STRESS 1    STRESS 2   SHEAR STRESS'/)
      DO 70 JJ=1,NUMSTP
      DO 70 NN=1,NUMPT
      DO 70 L=1,NUMPLY
      M=MATID(L)
      V21=V12(M)*E2(M)/E1(M)
      DEN=1.-V12(M)*V21
      ABC=STR2(L,JJ,NN)/DEN
      BCA=STR1(L,JJ,NN)
C
      STR1(L,JJ,NN)=E1(M)*STR1(L,JJ,NN)/DEN+V12(M)*E2(M)*ABC
      STR2(L,JJ,NN)=V12(M)*E2(M)*BCA/DEN+E2(M)*ABC
      STR12(L,JJ,NN)=STR12(L,JJ,NN)*G12(M)
C
      ANGLE=(NN-1)*IANG+ILOW
      DIST=(JJ-1)*STPINK
      IF(PUTOUT(IOUT,8).EQ.2.) WRITE(6,60)DIST,ANGLE,ANG(L),
     1STR1(L,JJ,NN),STR2(L,JJ,NN),STR12(L,JJ,NN)
   60 FORMAT(F6.3,2F8.2,3F12.2)
C
   70 CONTINUE
      MOVE=1
      IF(IFAIL.EQ.1) GO TO 20
   80 CONTINUE
C
      RETURN
      END
C
C     ************************************************************
C
      SUBROUTINE FAILURE
C
C     POINT STRESS/STRAIN ANALYSIS FOR FAILURE USING UNIDIRECTIONAL
C     MATERIAL ALLOWABLES
C
      COMMON/TWO/IOUT(15),NUMPLY,NUMMAT,ANG(8),PLYTHK(8),MATID(8)
      COMMON/THREE/IANG,ILOW,IHIGH,STPINK,NUMSTP
      COMMON/FOUR/PX,PY,PXY,P,PW,ALPHA,BETA,DIA,CORRECT
      COMMON/FIVE/FXT(3),FXC(3),FYT(3),FYC(3),FXY(3),IFAIL
      COMMON/NINE/STR1(8,7,73),STR2(8,7,73),STR12(8,7,73)
      REAL IANG,ILOW,IHIGH
      DIMENSION PLYFAIL(3,8),FAILS(3,8),RATIO(3,8),PLYRATO(3,8)
C
      IF(PUTOUT(IOUT,9).NE.2.) GO TO 40
      IF(IFAIL.GT.2) GO TO 20
      WRITE(6,10)
   10 FORMAT(///20X,'FAILURE CRITERIA PER PLY',//'   DIST     ANGLE ',
     1'     PLY',12X,'FAILURE NUMBERS'/35X,'1          2        SHEAR')
      GO TO 40
   20 CONTINUE
      WRITE(6,30)
   30 FORMAT(///20X,'FAILURE CRITERIA PER PLY',//'   DIST     ANGLE',
     1'       PLY       FAILURE          FAILURE RATIOS'/32X'NUMBER      ',
     2'  1          2       SHEAR')
   40 CONTINUE
```

```
      CHECK=0.
      KKK=1
      F2=0.0
      F3=0.0
      NUMPT=((IHIGH-ILOW)/IAN )+1
      DO 170 JJ=1,NUMSTP
      DO 170 KK=1,NUMPT
      SIG=1.0
      DO 160 II=1,NUMPLY
C
      X=STR1(II,JJ,KK)
      Y=STR2(II,JJ,KK)
      XY=STR12(II,JJ,KK)
      MATII=MATID(II)
C
C
      GO TO (50,50,60,70,80) IFAIL
C
   50 CONTINUE
C
C     MAXIMUM STRESS/STRAIN
C
      FX=FXT(MATII)
      IF(X.LT.0.0) FX=FXC(MATII)
      FY=FYT(MATII)
      IF(Y.LT.0.0) FY=FYC(MATII)
      F1=X/FX
      F2=Y/FY
      F3=XY/FXY(MATII)
      GO TO 90
C
C
   60 CONTINUE
C
C     TSAI-HILL CRITERIA
C
      FX=FXT(MATII)
      IF(X.LT.0.0) FX=FXC(MATII)
      FY=FYT(MATII)
      IF(Y.LT.0.0) FY=FYC(MATII)
      F1=X*X/(FX*FX)+Y*Y/(FY*FY)-X*Y/(FX*FX)+
     1   XY*XY/(FXY(MATII)*FXY(MATII))
      RATIOX=(X/FX)/SQRT(F1)
      RATIOY=(Y/FY)/SQRT(F1)
      RATIOXY=(XY/FXY(MATII))/SQRT(F1)
      GO TO 90
C
C
   70 CONTINUE
C
C     MODIFIED TSAI-WU CRITERIA
C
      F1=1./FXT(MATII)-1./FXC(MATII)
      F2=1./FYT(MATII)-1./FYC(MATII)
      F11=1./(FXT(MATII)*FXC(MATII))
      F22=1./(FYT(MATII)*FYC(MATII))
      F66=1./(FXY(MATII)*FXY(MATII))
      F1=F1*X+F2*Y+F11*X*X+F22*Y*Y+F66*XY*XY
      FX=FXT(MATII)
      IF(X.LT.0.0) FX=FXC(MATII)
      FY=FYT(MATII)
      IF(Y.LT.0.0) FY=FYC(MATII)
      F1=ABS(F1)
      RATIOX=(X/FX)/SQRT(F1)
      RATIOY=(Y/FY)/SQRT(F1)
      RATIOXY=(XY/FXY(MATII))/SQRT(F1)
      GO TO 90
```

```
   80 CONTINUE
C
C     HOFFMAN FAILURE CRITERIA
C
      F1=1./FXT(MATII)-1./FXC(MATII)
      F2=1./FYT(MATII)-1./FYC(MATII)
      F11=1./(FXT(MATII)*FXC(MATII))
      F22=1./(FYT(MATII)*FYC(MATII))
      F66=1./(FXY(MATII)*FXY(MATII))
      F12=-1./(FXT(MATII)*FXC(MATII))
      F1=F1*X+F2*Y+F11*X*X+F22*Y*Y+F12*X*Y+F66*XY*XY
      FX=FXT(MATII)
      IF(X.LT.0.0) FX=FXC(MATII)
      FY=FYT(MATII)
      IF(Y.LT.0.0) FY=FYC(MATII)
      F1=ABS(F1)
      RATIOX=(X/FX)/SQRT(F1)
      RATIOY=(Y/FY)/SQRT(F1)
      RATIOXY=(XY/FXY(MATII))/SQRT(F1)
      GO TO 90
C
C
   90 CONTINUE
C
      ANGLE=(KK-1)*IANG+ILOW
      DIST=(JJ-1)*STPINK
      IF(IFAIL.GT.2) GO TO 110
      IF(PUTOUT(IOUT,9).EQ.2.) WRITE(6,100) DIST,ANGLE,ANG(II),
     1F1,F2,F3
  100 FORMAT(F7.3,2F10.2,3F10.3)
      GO TO 130
  110 CONTINUE
      IF(PUTOUT(IOUT,9).EQ.2.) WRITE(6,120) DIST,ANGLE,ANG(II),
     1F1,RATIOX,RATIOY,RATIOXY
  120 FORMAT(F7.3,2F10.2,4F10.3)
  130 CONTINUE
C
C     AUTOMATIC SEARCH FOR FAILURE ROUTINE
C
      IF(SIG.EQ.2.) FAILS(1,II)=F1
      IF(SIG.EQ.2.) FAILS(2,II)=F2
      IF(SIG.EQ.2.) FAILS(3,II)=F3
      IF(SIG.EQ.2.) RATIO(1,II)=RATIOX
      IF(SIG.EQ.2.) RATIO(2,II)=RATIOY
      IF(SIG.EQ.2.) RATIO(3,II)=RATIOXY
      IF(JJ.NE.2) GO TO 150
      PLYFAIL(1,II)=F1
      PLYFAIL(2,II)=F2
      PLYFAIL(3,II)=F3
      PLYRATO(1,II)=RATIOX
      PLYRATO(2,II)=RATIOY
      PLYRATO(3,II)=RATIOXY
      CHK=CHECK
      IF(ABS(CHECK).LT.ABS(F1)) CHECK=F1
      IF(ABS(CHECK).LT.ABS(F2)) CHECK=F2
      IF(ABS(CHECK).LT.ABS(F3)) CHECK=F3
      IF(CHECK.EQ.CHK) GO TO 150
      KKK=KK
      III=II
      SIG=2.0
      DO 140 M=1,III
      DO 140 N=1,3
      FAILS(N,M)=PLYFAIL(N,M)
      RATIO(N,M)=PLYRATO(N,M)
  140 CONTINUE
  150 CONTINUE
```

```
C
C
  160 CONTINUE
  170 CONTINUE
C
C
      IF(CHECK.EQ.0.0) GO TO 260
      IF(IFAIL.EQ.1) CORRECT=1.0/ABS(CHECK)
      IF(IFAIL.EQ.2) CORRECT=1.0/ABS(CHECK)
      IF(IFAIL.EQ.3) CORRECT=1.0/SQRT(CHECK)
      IF(IFAIL.EQ.4) CORRECT=1.0/SQRT(CHECK)
      IF(IFAIL.EQ.5) CORRECT=1.0/SQRT(CHECK)
C
      IF(PUTOUT(IOUT,10).NE.2.) GO TO 250
      IF(CORRECT.LT..999.OR.CORRECT.GT.1.001) GO TO 250
      ANGLE=(KKK-1)*IANG+ILOW
C
      IF(IFAIL.GT.2) GO TO 210
      WRITE(6,180) PX,PY,PXY,P
  180 FORMAT(///20X,'AUTOMATIC SEARCH FOR FAILURE'//25X,
     1'FAILURE STRESSES'/18X,'PX',10X,'PY',10X,'PXY',10X,'P'/,
     211X,4F12.2//9X,'DIST   ANGLE        PLY        FAILURE NUMBERS'/,
     336X,'1        2      SHEAR')
C
      DO 200 I=1,NUMPLY
      WRITE(6,190) STPINK,ANGLE,ANG(I),FAILS(1,I),FAILS(2,I),FAILS(3,I)
  190 FORMAT(F11.3,F9.2,F10.2,3F8.3)
  200 CONTINUE
      GO TO 260
C
  210 CONTINUE
      WRITE(6,220) PX,PY,PXY,P
  220 FORMAT(///20X,'AUTOMATIC SEARCH FOR FAILURE'//25X,
     1'FAILURE STRESSES'/18X,'PX',10X,'PY',10X,'PXY',10X,'P'/,
     211X,4F12.2//5X,'    DIST    ANGLE      PLY        FAILURE  ',
     39X,'FAILURE RATIOS'/35X,'NUMBER',7X,'1',9X,'2',7X,'SHEAR')
      DO 240 I=1,NUMPLY
      WRITE(6,230) STPINK,ANGLE,ANG(I),FAILS(1,I),RATIO(1,I),
     1 RATIO(2,I),RATIO(3,I)
  230 FORMAT(F11.3,F9.2,F10.2,4F10.3)
  240 CONTINUE
  250 CONTINUE
C
C
  260 CONTINUE
      IF(PUTOUT(IOUT,10).NE.2.) CORRECT=1.0
C
      RETURN
      END
```

```
C     ***********************************************************
      SUBROUTINE SIMULT(A,B,N,KS)
C     TEST FOR ALGORITHMIC SINGULARITY ADDED 01/10/79
      DIMENSION A(1),B(1)
C     MACHINE EPSILON FOR CYBER SINGLE PRECISION
      DATA EPS/7.11E-15/
      TOL=3.16*EPS*(N-1)
      BETA=0.0
      KS=0
      JJ=-N
      DO 65 J=1,N
      JY=J+1
      JJ=JJ+N+1
      BIGA=0.0
      IT=JJ-J
      DO 30 I=J,N
      IJ=IT+I
      IF(ABS(BIGA)-ABS(A(IJ))) 20,30,30
   20 BIGA=A(IJ)
      IMAX=I
   30 CONTINUE
      IF(ABS(BIGA).GT.BETA)BETA=ABS(BIGA)
      IF(ABS(BIGA)-TOL*BETA) 35,35,40
   35 KS=1
      RETURN
   40 I1=J+N*(J-2)
      IT=IMAX-J
      DO 50 K=J,N
      I1=I1+N
      I2=I1+IT
      SAVE=A(I1)
      A(I1)=A(I2)
      A(I2)=SAVE
   50 A(I1)=A(I1)/BIGA
      SAVE=B(IMAX)
      B(IMAX)=B(J)
      B(J)=SAVE/BIGA
      IF(J-N) 55,70,55
   55 IQS=N*(J-1)
      DO 65 IX=JY,N
      IXJ=IQS+IX
      IT=J-IX
      DO 60 JX=JY,N
      IXJX=N*(JX-1)+IX
      JJX=IXJX+IT
   60 A(IXJX)=A(IXJX)-(A(IXJ)*A(JJX))
   65 B(IX)=B(IX)-(B(J)*A(IXJ))
   70 NY=N-1
      IT=N*N
      DO 80 J=1,NY
      IA=IT-J
      IB=N-J
      IC=N
      DO 80 K=1,J
      B(IB)=B(IB)-A(IA)*B(IC)
      IA=IA-N
   80 IC=IC-1
      RETURN
      END
```

```
C     ****************************************************************
      SUBROUTINE ROOTS(XCOF,COF,M,ROOTR,ROOTI,IER)
      DIMENSION XCOF(M),COF(M),ROOTR(M),ROOTI(M)
      DOUBLE PRECISION XO,YO,X,Y,XPR,YPR,UX,UY,V,YT,XT,U
     1                 ,XT2,YT2,SUMSQ,DX,DY,TEMP,ALPHA,FI
     2                 ,RMPREC,TOL
C     RELATIVE MACHINE PRECISION (TEST FOR 'ALMOST ZERO')
      DATA RMPREC/1.0D-14/ ,TOL/1.0D-4/
      IFIT=0
      N=M
      IER=0
      IF(XCOF(N+1)) 10,30,10
   10 IF(N) 20,20,50
   20 IER=1
      GO TO 360
   30 IER=4
      GO TO 360
   40 IER=2
      GO TO 360
   50 IF(N-36) 60,60,40
   60 NX=N
      NXX=N+1
      N2=1
      KJ1 = N+1
      DO 70 L=1,KJ1
      MT=KJ1-L+1
   70 COF(MT)=XCOF(L)
   80 XO=.00500101D0
      YO=0.01000101D0
      IN=0
   90 X=XO
      XO=-10.D0*YO
      YO=-10.D0*X
      X=XO
      Y=YO
      IN=IN+1
      GO TO 110
  100 IFIT=1
      XPR=X
      YPR=Y
  110 ICT=0
  120 UX=0.D0
      UY=0.D0
      V =0.D0
      YT=0.D0
      XT=1.D0
      U=COF(N+1)
      IF(DABS(U).LE.RMPREC)GO TO 280
  130 DO 140 I=1,N
      L =N-I+1
      TEMP=COF(L)
      XT2=X*XT-Y*YT
      YT2=X*YT+Y*XT
      U=U+TEMP*XT2
      V=V+TEMP*YT2
      FI=I
      UX=UX+FI*XT*TEMP
      UY=UY-FI*YT*TEMP
      XT=XT2
  140 YT=YT2
      SUMSQ=UX*UX+UY*UY
      IF(SUMSQ.LE.RMPREC)GO TO 230
  150 DX=(V*UY-U*UX)/SUMSQ
```

```
      X=X+DX
      DY=-(U*UY+V*UX)/SUMSQ
      Y=Y+DY
  160 IF( DABS(DY)+ DABS(DX).LE.TOL) GO TO 210
  170 ICT=ICT+1
      IF(ICT-500) 120,180,180
  180 IF(IFIT) 210,190,210
  190 IF(IN-5) 90,200,200
  200 IER=3
      GO TO 360
  210 DO 220 L=1,NXX
      MT=KJ1-L+1
      RTEMP=XCOF(MT)
      XCOF(MT)=COF(L)
  220 COF(L)=RTEMP
      ITEMP=N
      N=NX
      NX=ITEMP
      IF(IFIT) 250,100,250
  230 IF(IFIT) 240,90,240
  240 X=XPR
      Y=YPR
      GO TO 210
  250 IFIT=0
  260 IF(DABS(Y)-1.0D-4*DABS(X)) 290,270,270
  270 ALPHA=X+X
      SUMSQ=X*X+Y*Y
      N=N-2
      GO TO 300
  280 X=0.D0
      NX=NX-1
      NXX=NXX-1
  290 Y=0.D0
      SUMSQ=0.D0
      ALPHA=X
      N=N-1
  300 COF(2)=COF(2)+ALPHA*COF(1)
  310 DO 320 L=2,N
  320 COF(L+1)=COF(L+1)+ALPHA*COF(L)-SUMSQ*COF(L-1)
  330 ROOTI(N2)=Y
      ROOTR(N2)=X
      N2=N2+1
      IF(SUMSQ.LE.RMPREC) GO TO 350
  340 Y=-Y
      SUMSQ=0.D0
      GO TO 330
  350 IF(N.GT.0)GO TO 80
  360 RETURN
      END
```


☆U.S.Government Printing Office: 1981 — 757-002/587