RJ45 Ports

Schematic	ethernet_switch	Create at	2026-02-01
		Update at	2026-02-28
Board	ethernet_switch	Page	RJ45 Ports
Drawn	ethernet_switch		
Reviewed			
	Version	Size	Page 1 Total 5
EasyEDA	V1.0	A4	EasyEDA.com

Switch IC

System & Clocks

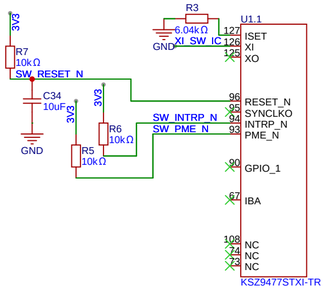

Oscilator

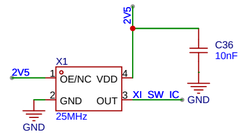

Strap configuration

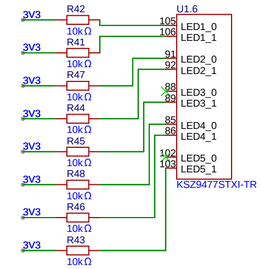

SGMII

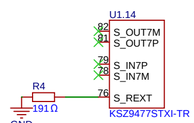

Power

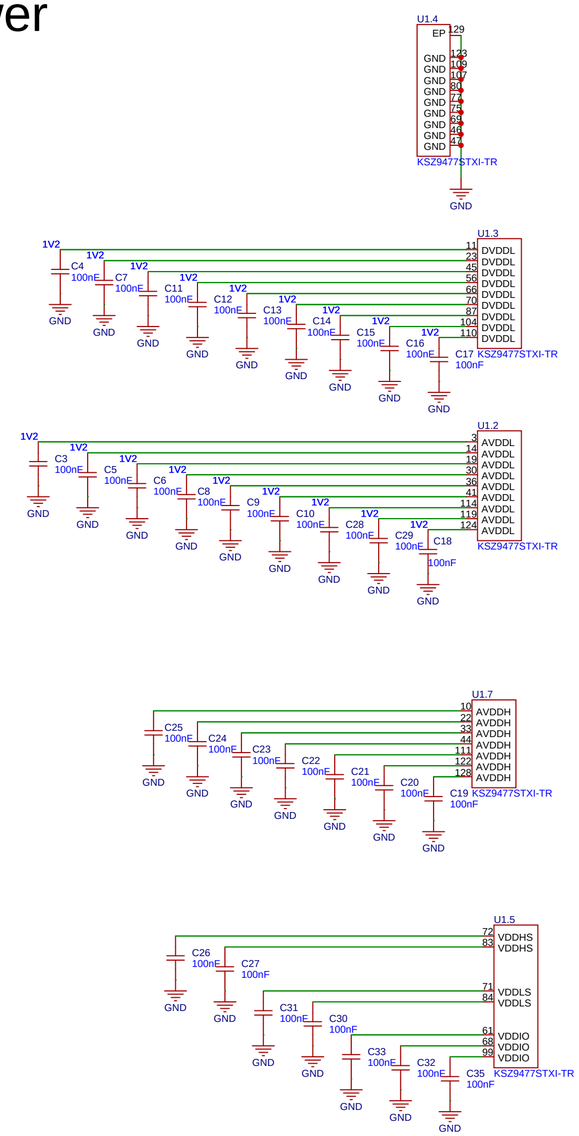

SPI

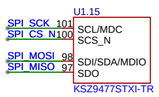

RJ45 ports

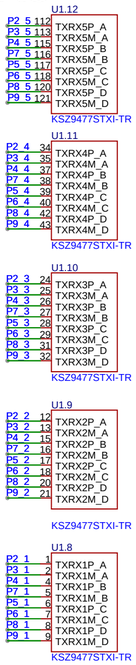

RMII

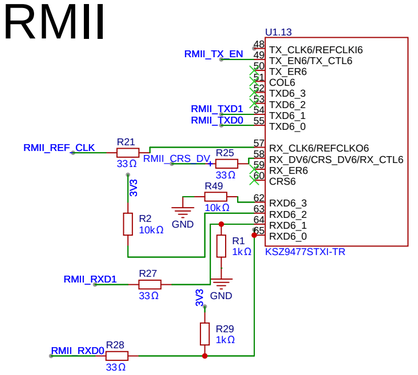

Schematic	ethernet_switch	Create at	2026-02-02
		Update at	2026-02-25
Board	ethernet_switch	Page	Switch IC
Drawn	ethernet_switch		
Reviewed			
		Version	Size	Page 2 Total 5
EasyEDA		V1.0	A4	EasyEDA.com

MCU

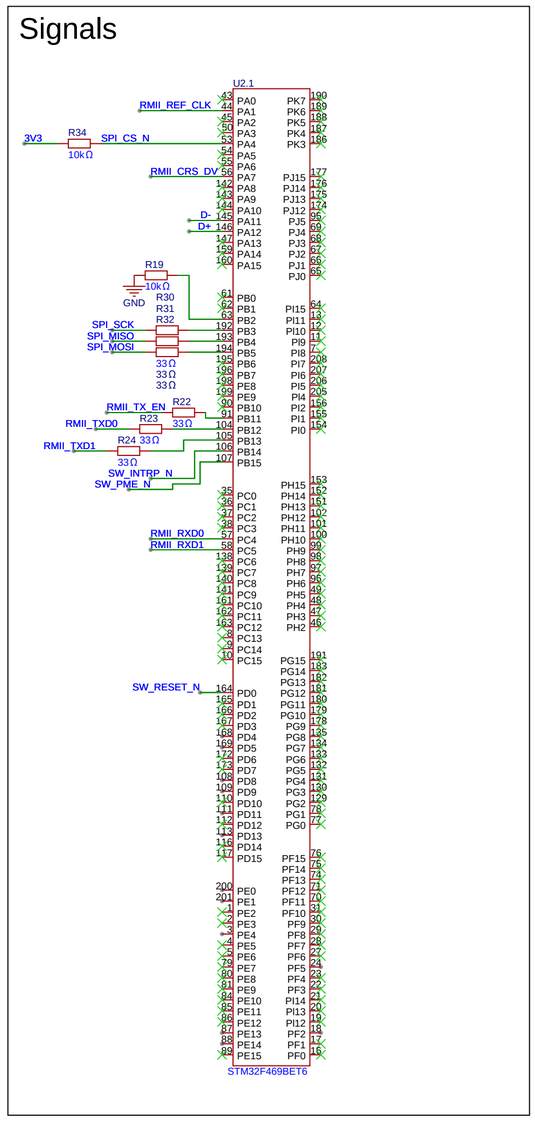

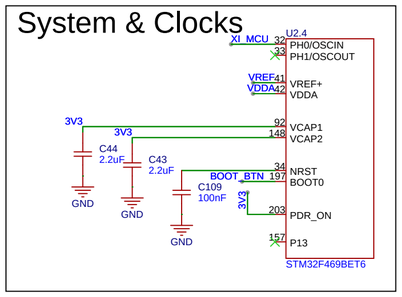

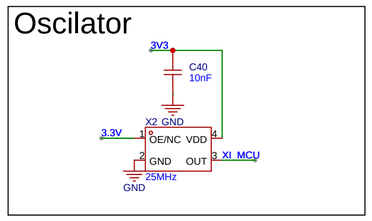

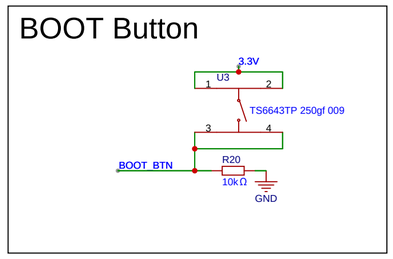

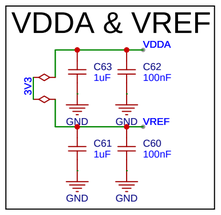

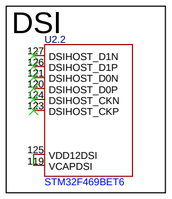

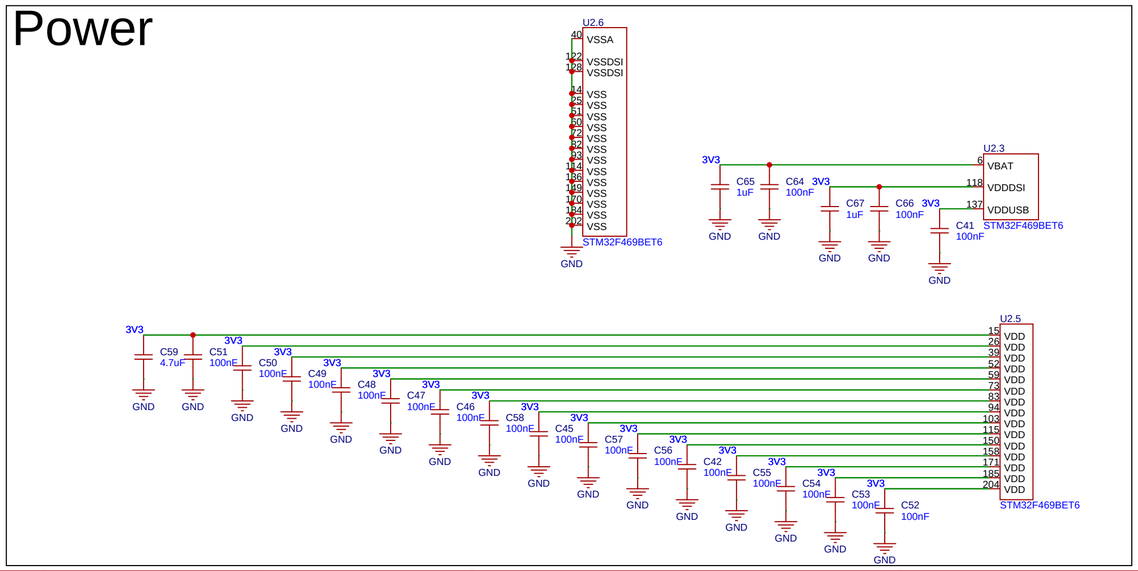

Schematic	ethernet_switch	Create at	2026-02-02
		Update at	2026-02-25
Board	ethernet_switch	Page	MCU
Drawn	ethernet_switch		
Reviewed			
		Version	Size	Page 3 Total 5
EasyEDA		V1.0	A4	EasyEDA.com

LDO and Buck

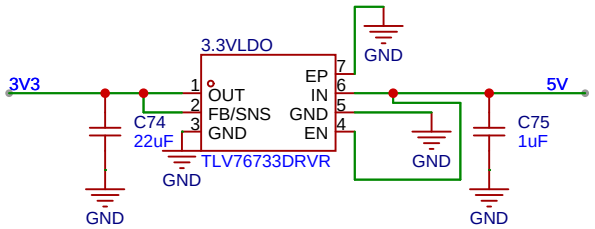

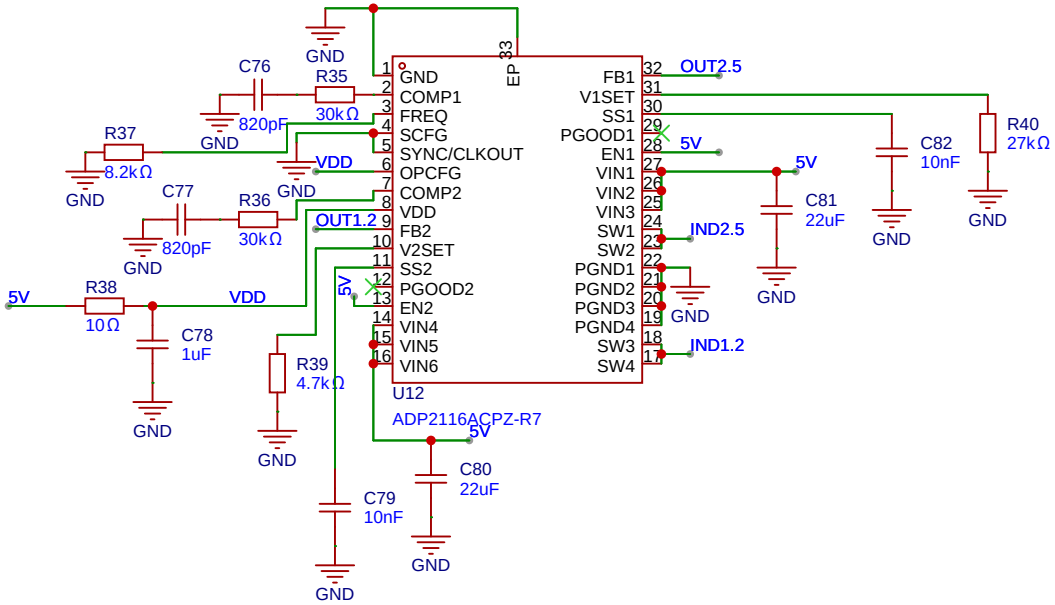

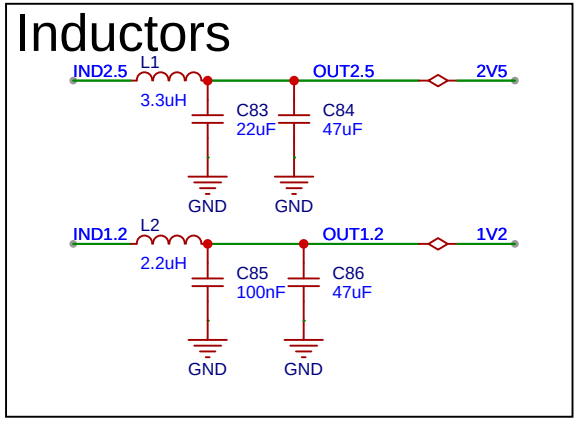

Schematic	ethernet_switch	Create at	2026-02-14
		Update at	2026-02-25
Board	ethernet_switch	Page	Power
Drawn	ethernet_switch		
Reviewed			
		Version	Size	Page 4 Total 5
EasyEDA		V1.0	A4	EasyEDA.com

USB + ESD

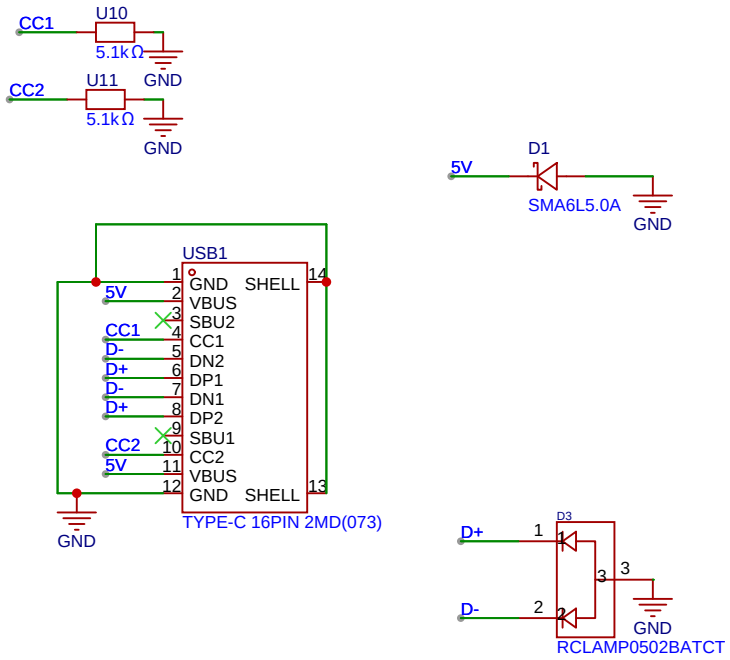

Schematic	ethernet_switch	Create at	2026-02-15
		Update at	2026-02-22
Board	ethernet_switch	Page	USB+ESD
Drawn		ethernet_switch	
Reviewed			
		Version	Size	Page 5 Total 5
EasyEDA		V1.0	A4	EasyEDA.com