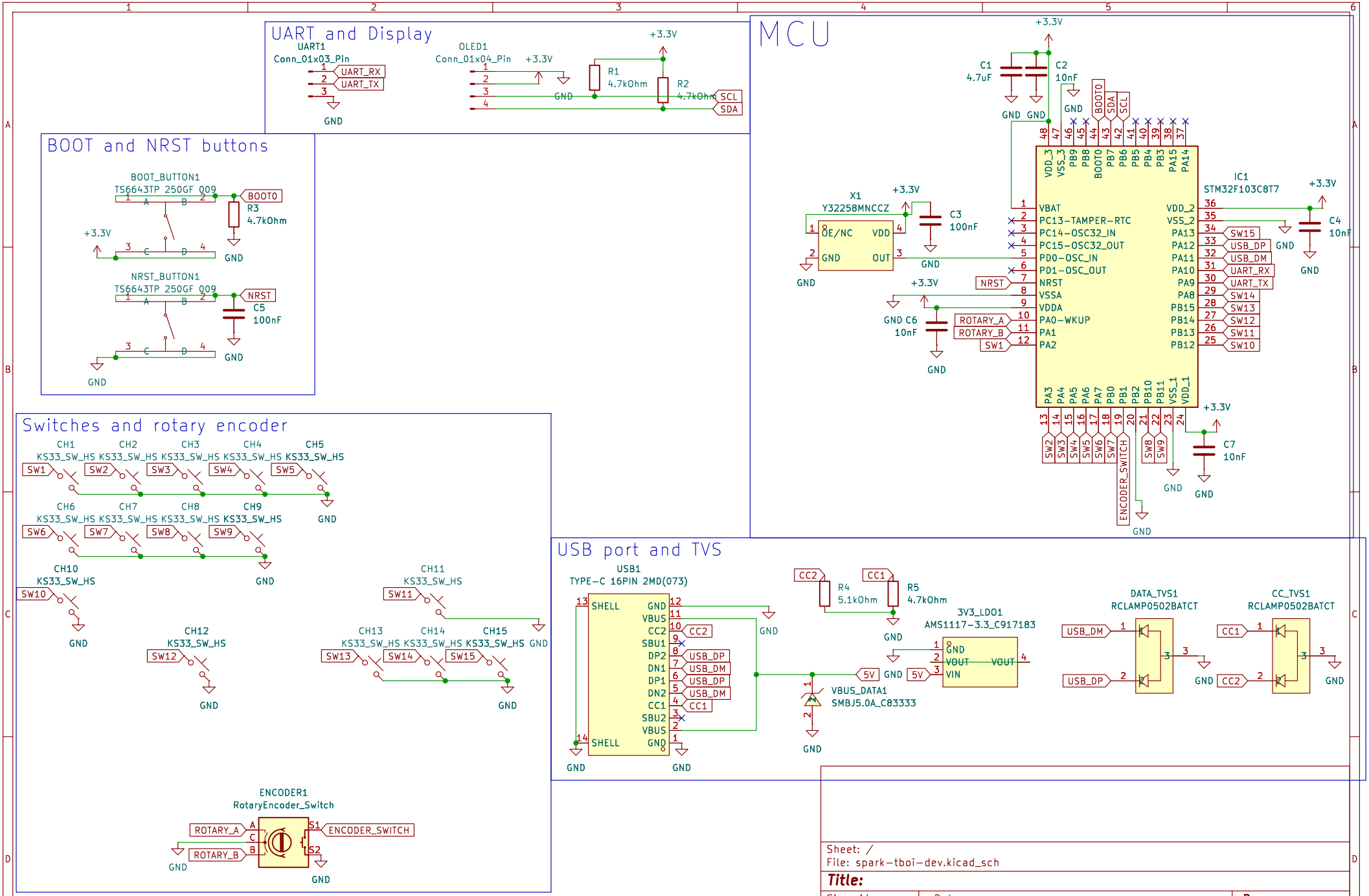
UART and Display
UART1
Conn_01x03_Pin
UART_RX
UART_TX
OLED1
Conn_01x04_Pin
+3.3V
R1
4.7kOhm
R2
4.7kOhm
SCL
SDA
GND
MCU
IC1
STM32F103C8T7
X1
Y32258MNCCZ
OE/NC
VDD
GND
OUT
C1
4.7uF
C2
10nF
C3
100nF
C4
10nF
C5
100nF
C6
10nF
C7
10nF
VBAT
PC13-TAMPER-RTC
PC14-OSC32_IN
PC15-OSC32_OUT
PD0-OSC_IN
PD1-OSC_OUT
NRST
VSSA
VDDA
PA0-WKUP
PA1
PA2
VDD_2
VSS_2
PA13
PA12
PA11
PA10
PA9
PA8
PB15
PB14
PB13
PB12
VDD_3
VSS_3
PB9
PB8
BOOT0
PB7
PB6
PB5
PB4
PB3
PA15
PA14
PA3
PA4
PA5
PA6
PA7
PB0
PB1
PB2
PB10
PB11
VSS_1
VDD_1
ROTARY_A
ROTARY_B
SW1
SW15
USB_DP
USB_DM
UART_RX
UART_TX
SW14
SW13
SW12
SW11
SW10
SW2
SW3
SW4
SW5
SW6
SW7
SW8
SW9
ENCODER_SWITCH
BOOT0
SDA
SCL
BOOT_BUTTON1
TS6643TP 250GF 009
R3
4.7kOhm
NRST_BUTTON1
Switches and rotary encoder
CH1
KS33_SW_HS
CH2
CH3
CH4
CH5
CH6
CH7
CH8
CH9
CH10
CH11
CH12
CH13
CH14
CH15
ENCODER1
RotaryEncoder_Switch
S1
S2
USB port and TVS
USB1
TYPE-C 16PIN 2MD(073)
SHELL
CC2
CC1
R4
5.1kOhm
R5
4.7kOhm
3V3_LDO1
AMS1117-3.3_C917183
VOUT
VIN
5V
VBUS_DATA1
SMBJ5.0A_C83333
DATA_TVS1
RCLAMP0502BATCT
CC_TVS1
RCLAMP0502BATCT
Sheet: /
File: spark-tboi-dev.kicad_sch
Title:
Size: A4
Date:
Rev:
KiCad E.D.A. 9.0.7
Id: 1/1