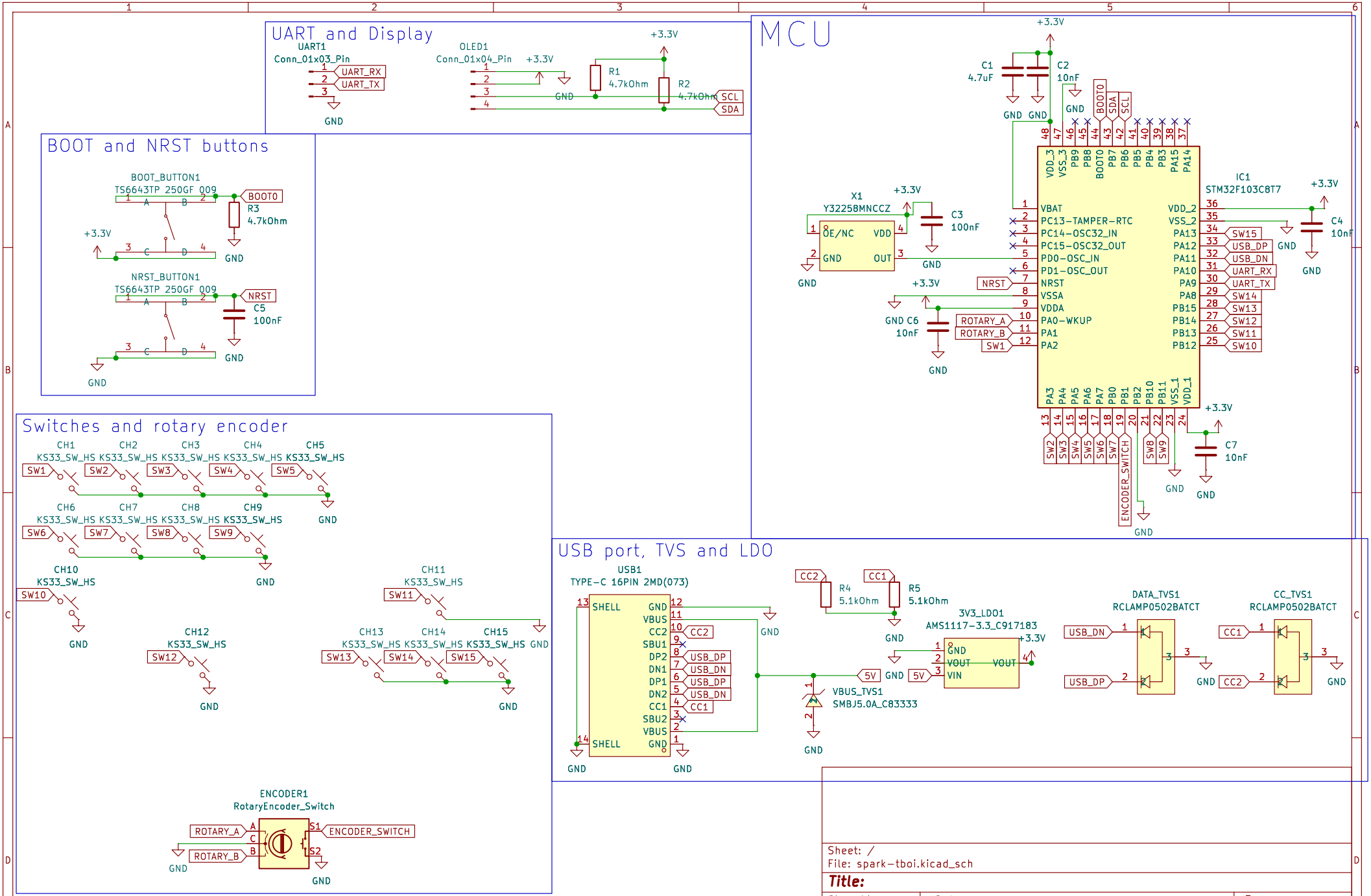

Sheet: /
File: spark-tboi.kicad_sch

Title:

Size: A4 | Date: | **Rev:**
KiCad E.D.A. 9.0.7 | Id: 1/1