Proform Pro 2000 Console replacement project schematic / BOM

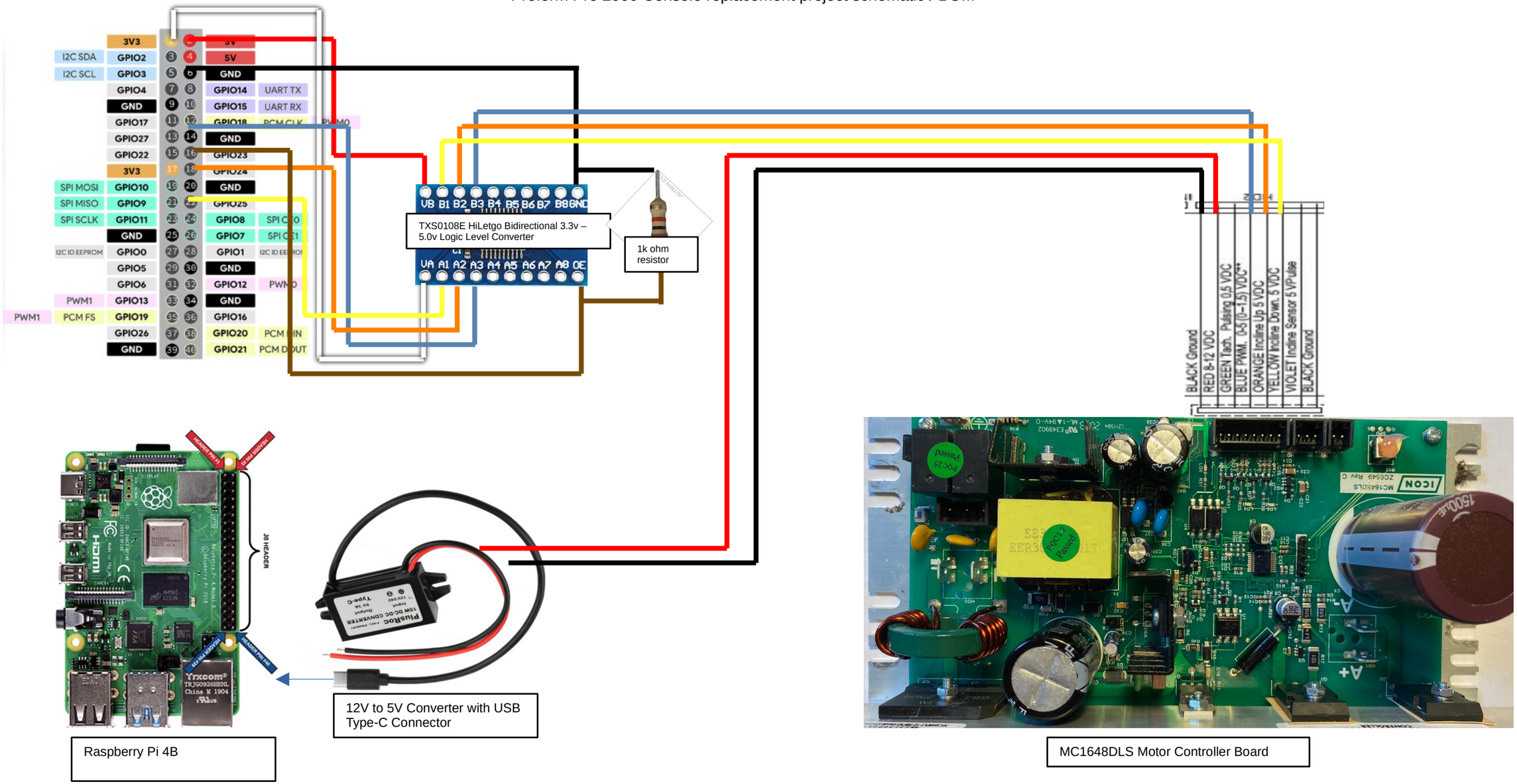

Information sources:
https://forum.allaboutcircuits.com/threads/icon-mc1648dls-custom-console-setup.193274/
https://www.youtube.com/watch?v=XTHYAkCECqk&t=101s