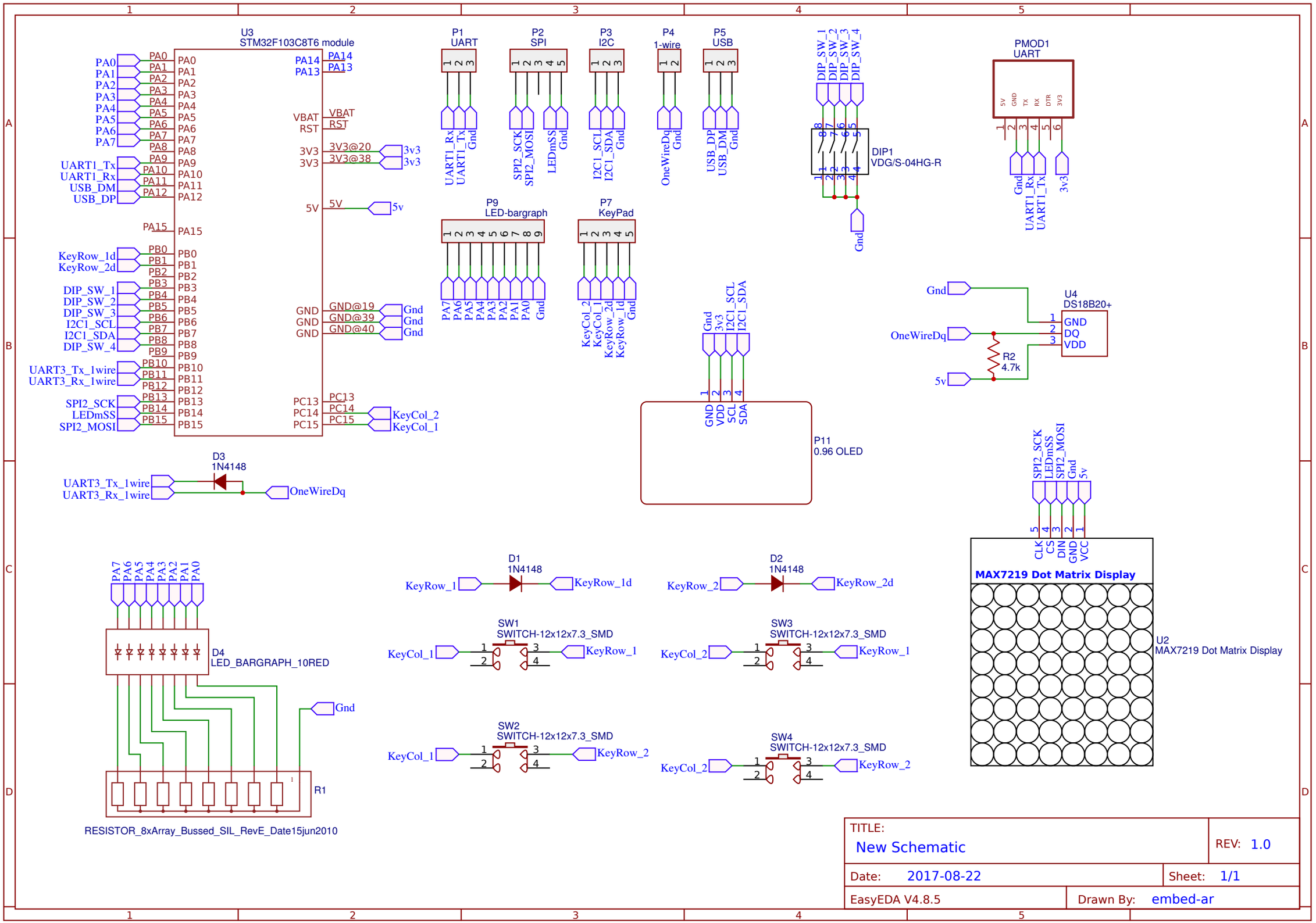
U3
STM32F103C8T6 module
PA0 PA1 PA2 PA3 PA4 PA5 PA6 PA7 PA8 PA9 PA10 PA11 PA12 PA15 PB0 PB1 PB2 PB3 PB4 PB5 PB6 PB7 PB8 PB9 PB10 PB11 PB12 PB13 PB14 PB15
PA14 PA13 VBAT RST 3V3 3V3 5V GND GND GND PC13 PC14 PC15
3V3@20 3V3@38 5V GND@19 GND@39 GND@40
UART1_Tx UART1_Rx USB_DM USB_DP
KeyRow_1d KeyRow_2d
DIP_SW_1 DIP_SW_2 DIP_SW_3 I2C1_SCL I2C1_SDA DIP_SW_4
UART3_Tx_1wire UART3_Rx_1wire
SPI2_SCK LEDmSS SPI2_MOSI
KeyCol_2 KeyCol_1
P1 UART
P2 SPI
P3 I2C
P4 1-wire
P5 USB
P9 LED-bargraph
P7 KeyPad
DIP1 VDG/S-04HG-R
PMOD1 UART
5V GND TX RX DTR 3V3
U4 DS18B20+
GND DQ VDD
R2 4.7k
P11 0.96 OLED
GND VDD SCL SDA
D3 1N4148
OneWireDq
D1 1N4148
D2 1N4148
KeyRow_1 KeyRow_1d KeyRow_2 KeyRow_2d
SW1 SW2 SW3 SW4
SWITCH-12x12x7.3_SMD
D4 LED_BARGRAPH_10RED
R1
RESISTOR_8xArray_Bussed_SIL_RevE_Date15jun2010
CLK CS DIN GND VCC
MAX7219 Dot Matrix Display
U2 MAX7219 Dot Matrix Display
TITLE: New Schematic
REV: 1.0
Date: 2017-08-22
Sheet: 1/1
EasyEDA V4.8.5
Drawn By: embed-ar