Dante Raspberry Pi Hat board spec

Nov 2023

TI Confidential – NDA Restrictions

DANTE Raspberry HAT for AM62/AM62A/AM68A/AM69A starter kits

Raspberry Pi expansion Pin

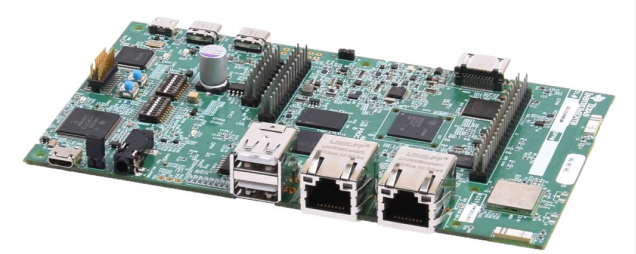

Pin Name	Jumper location	
	SK-AM62/A	SK-AM68/9A
AFSX		35
ACLKX	11	12
AXR0	33	38
AXR1	36	40
EQEP_A	38	11
CPTSx_HWnTS PUSH / GPIO	19	19 (GPIO only)
I2C Data	3	3
I2C Clk	5	5
Power (3.3V)	1, 17	1, 17
Power (5.0V)	2, 4	2, 4

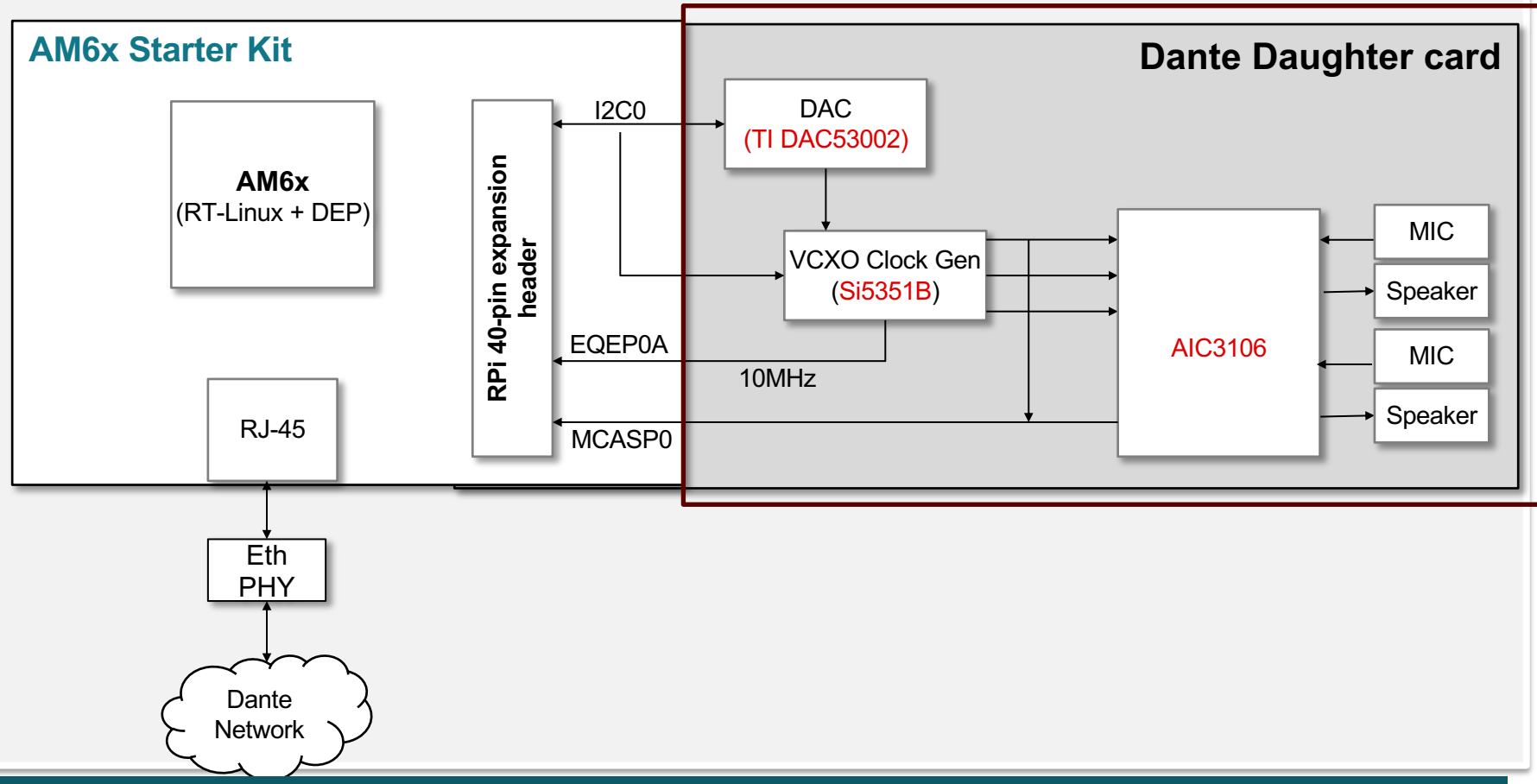

Common Dante card that works across RPi header of all starter kits

Raspberry Pi pinout on SK-AM62

Ball	Pin Name	Use Case Function	Mux Mode	Direction	EVM Location	Instructions/info on AM62x SK EVM
D20	AFSX	**Frame Sync (TX)**	0	Input	De-pop R32, blue-wire required	
B20	ACLKX	**Bit Clock (TX)**	0	Input	J3.11	10k pull-up to 3.3V on the AM62x SK EVM
E18	AXR0	**Serializer 0**	0	Input	J3.33	Directly connected to User Expansion Connector
B18	AXR1	**Serializer 1**	0	Input	J3.36	10k pull-up to 3.3V on the AM62x SK EVM
A16	I2C0.SDA	**I2C Data**	0	I/0	J3.3	4.7k pull-up to 3.3V on the AM62x SK EVM
B16	I2C0.SCL	**I2C Clock**	0	Output	J3.5	4.7k pull-up to 3.3V on the AM62x SK EVM
B19	EQEP0_A	**10MHz FB CLK input/counter**	8	Input	J3.38	Connected to User Expansion Connector through a mux whose SEL pin is controlled through an I/O expander (enable on I/O expander P12, SEL on I/O expander P25)
B13	HW1TSPUSH/GPIO1_18	**LR Clock feedback**	1 or 7	Input	J3.19	Directly connected to User Expansion Connector
n/a	-	**3.3V**			J3.1 & J3.17	Enabled through an enable pin controlled by an I/O expander (P5 output on the expander)
n/a	-	**5V**			J3.2 & J3.4	Enabled through an enable pin controlled by an I/O expander (P6 output on the expander)

Jason to review this table

TI Confidential – NDA Restrictions

Dante board Reference Schematic

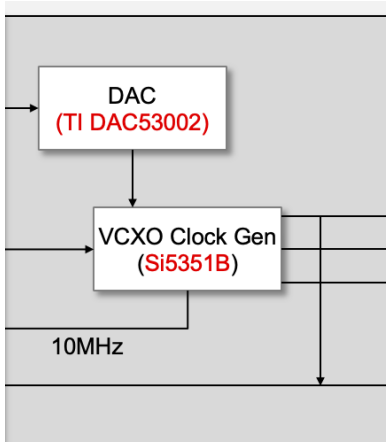

Audinate schematic– need approval from them to share it

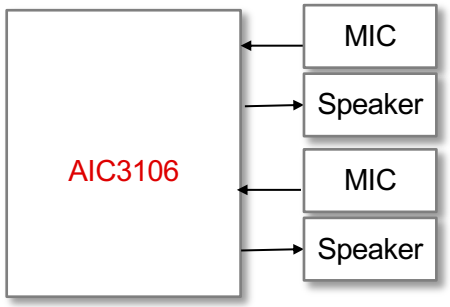

Schematic from https://www.ti.com/lit/zip/sprr448 - Page 40

Overall Schematic: Dante ref design (Left above) + AM62x-SK ref design (right above)

Dante board Reference Schematic

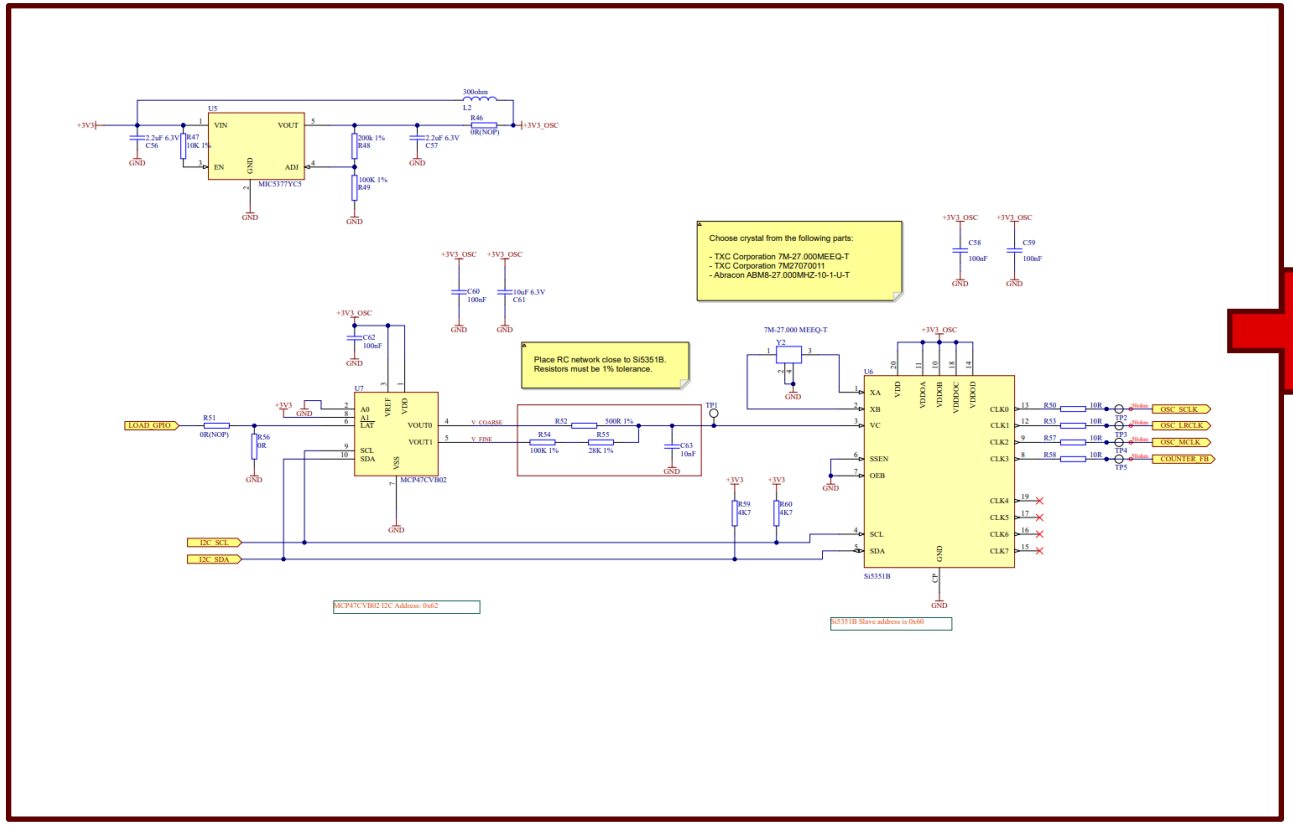

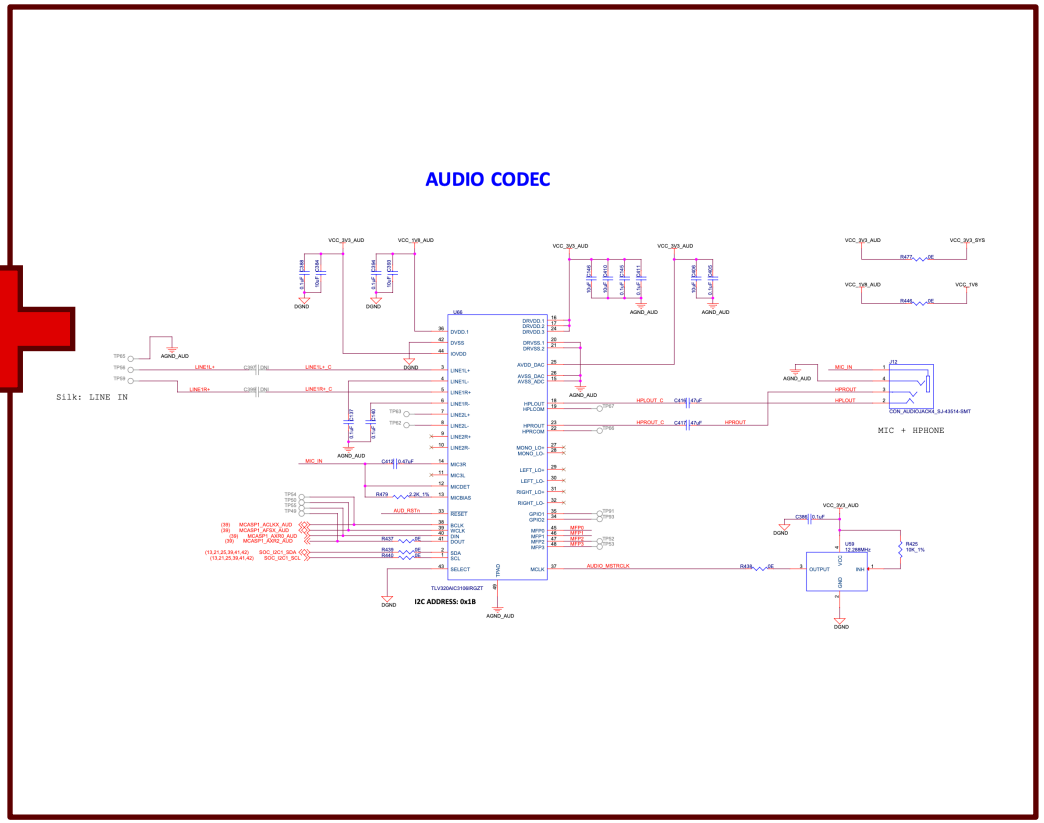

Overall Schematic: Dante ref design (Left above) + AM62x-SK ref design (right above)

Clock schematic | from Audinate

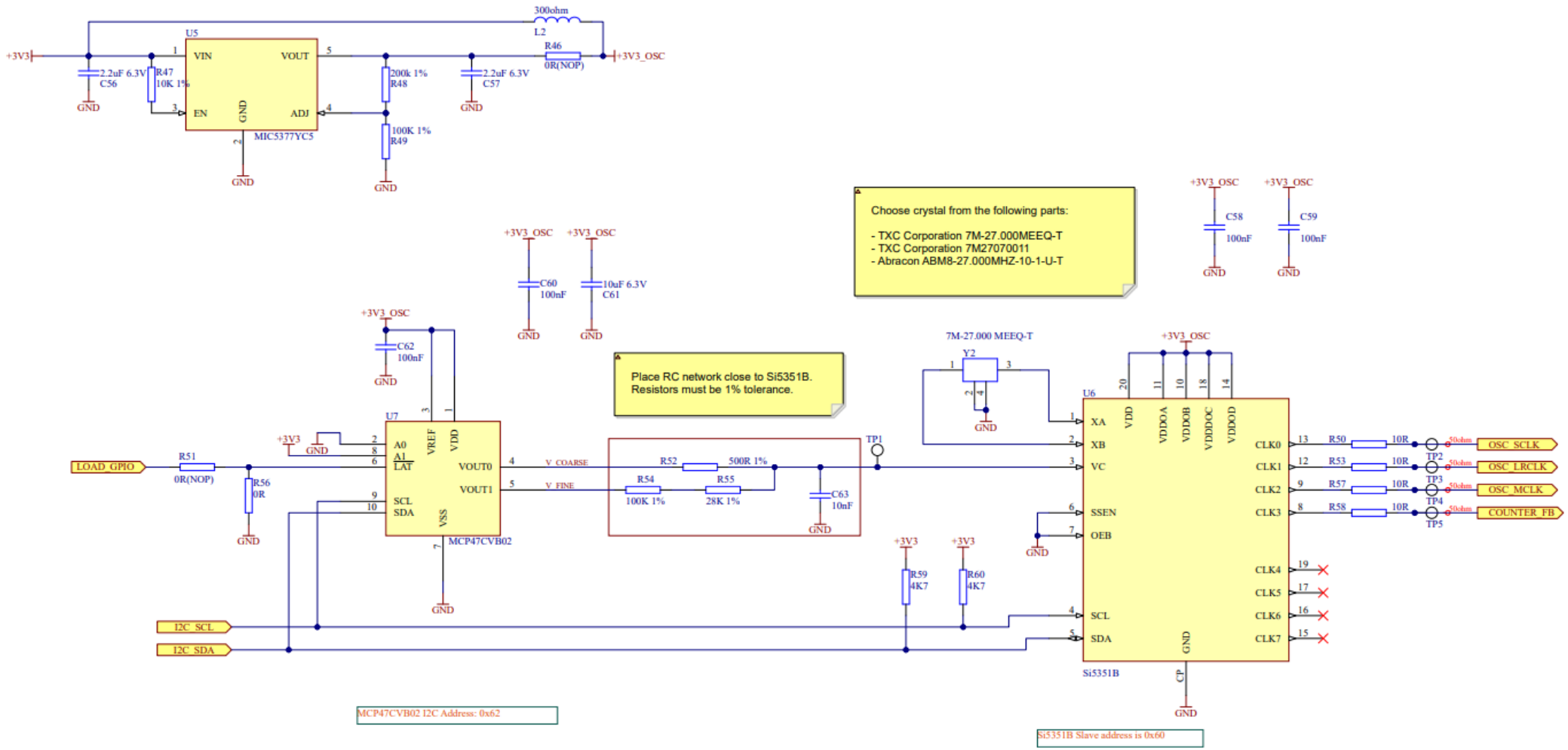

TI Confidential – NDA Restrictions

Codec and AFE schematic

AUDIO CODEC

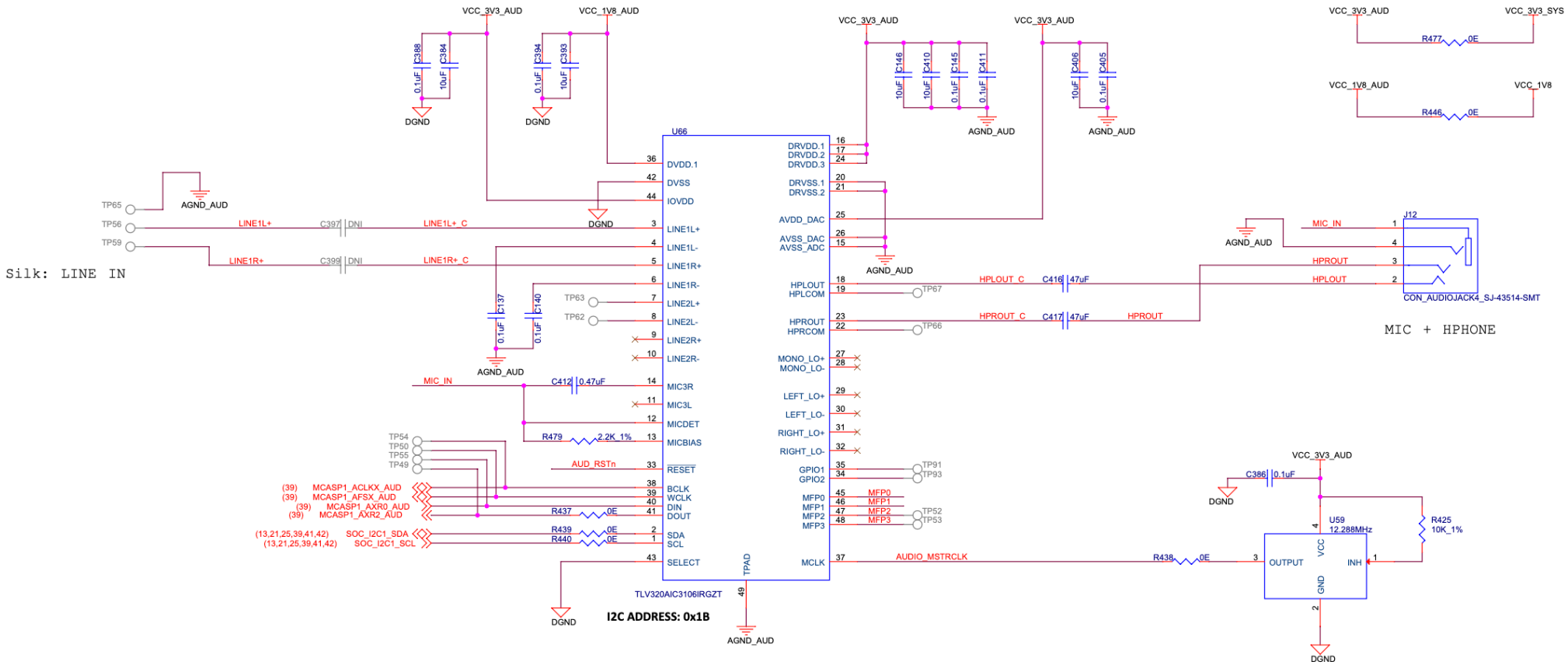

TI Confidential – NDA Restrictions

RPi connector pins to use | AM62 vs AM68/9

Pin Name	SK-AM62	SK-AM68/9
AFSX		35
ACLKX	**11**	12
AXR0	**33**	38
AXR1	**36**	40
EQEP_A	**38**	11
CPTSx_HWnTSPUSH / GPIO	19	19 (GPIO only)
I2C Data	3	3
I2C Clk	5	5
Power (3.3V)	1, 17	1, 17
Power (5.0V)	2, 4	2, 4

Common HAT | Pin differences taken care with HW mux switch

TI Confidential – NDA Restrictions