Types of ClickID Hardware Implemetation schematic

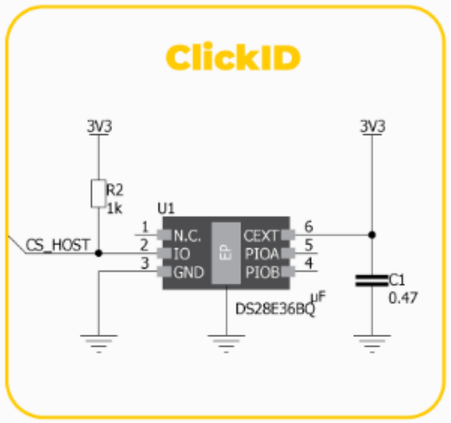

1. When implementing 1-Wire interface with 3.3V power suppy for the ClickID solution

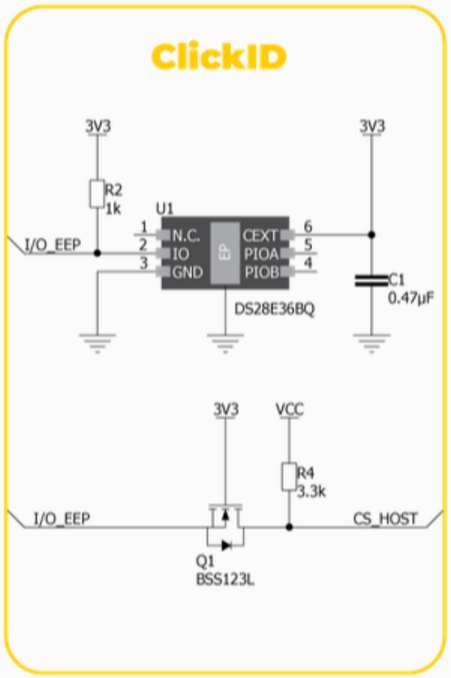

2. When using 1-Wire interface, 3.3V and 5V (LDO needed) power supply for the ClickID solution

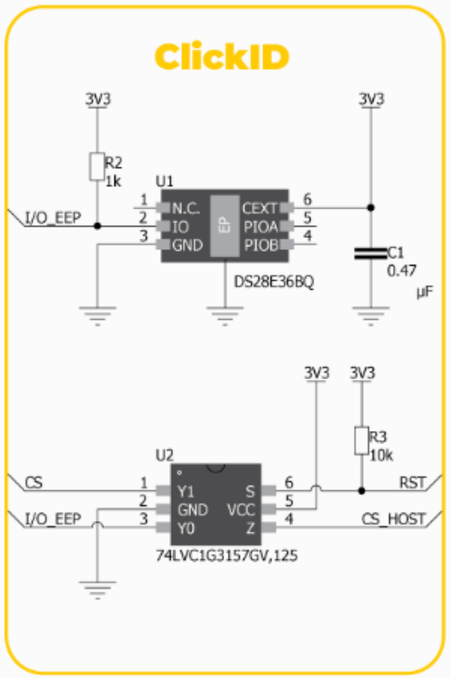

3. When using 3.3V power supply, 1-Wire interface and SPI interface (RST pin for multiplexer needed) for the ClickID solution.

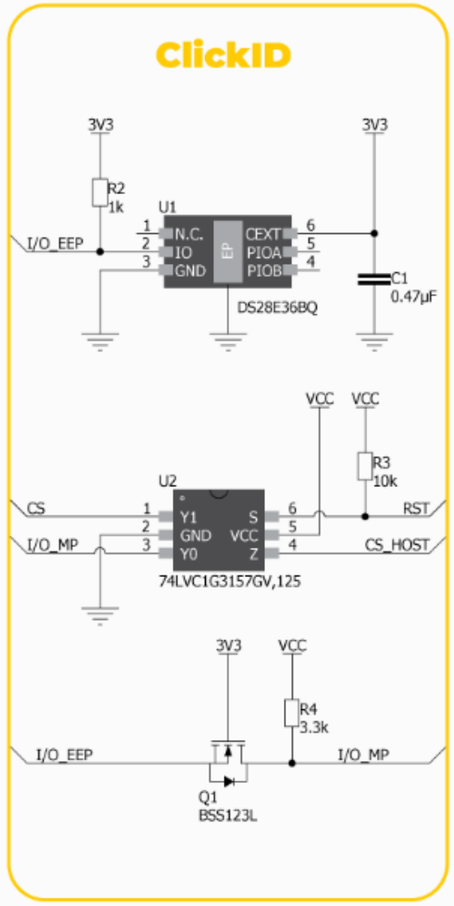

4. When using 3.3V and 5V (LDO needed) power supply , as well as 1-Wire interface and SPI interface (RST pin for multiplexer needed) for the ClickID solution.

www.mikroe.com

MIKROE assumes no responsibility for any errors or inaccuracies that may appear in the present document.
Specification and information contained in the preset schematic are subject to change at any time without notice. Copyright©2024 MIKROE. All rights reserved.