Name	rev_64925.zip	Id.	26740 - QED Handled
Report Generated on	Apr 10, 2025, 4:57:55 PM	Customer	
Board Id		Article Id	

Single PCB View - Original

Top View	Bottom View
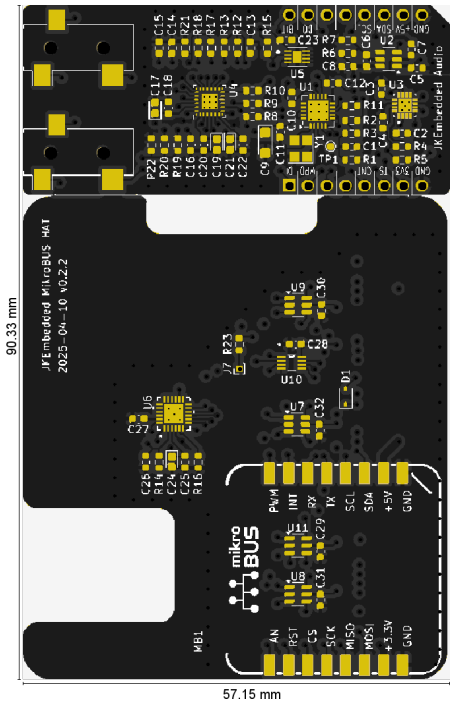	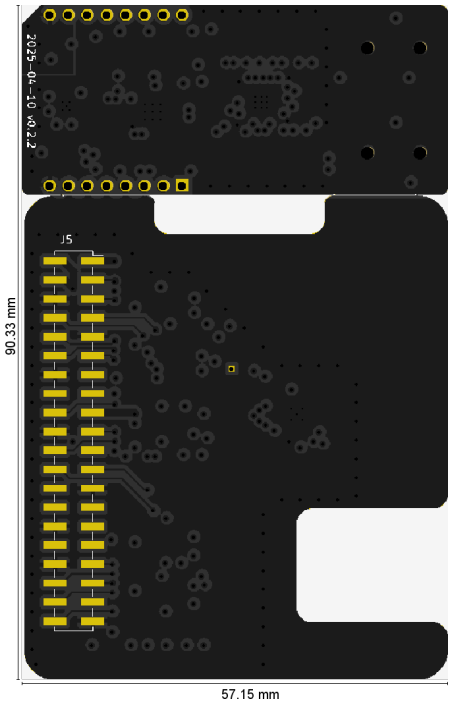

Summary - General - Original

PCB Size	57.15 mm x 90.329 mm		Customer Panel Size	
PCB Thickness	1.6 mm		Max. Aspect Ratio on PTH	6.4
Copper Layers	4		Pressing Stages	1
Surface Finish	unknown		Drill Hole Density	650 Holes/dm^2
Solder Mask	Both		Testable Points	379
Solder Mask Color	Green		Min. SMD/BGA Size	0.24 mm
Legend	Both		!HolesInPadPth!	Yes
Legend Color	White		!HolesInPadBlind!	No
Edge Connector Area	0 dm^2		Stacked Vias	
Peeloff Mask	No		Castellated	No
Carbon Mask	No		Anomalies	Yes

Summary - Copper Layer Minima - Original

Type	Copper Width	Critical Copper Width	Trace Width	Critical Trace Width	Copper to Copper Clr.	Trace to Trace Clr.	Same Net Clr.	Ring	Copper to Outline Clr.
	mm	mm	mm	mm	mm	mm	mm	mm	mm
Outer	1 0.160	2 0.237	3 0.250	4 0.250	5 0.142	6 0.200	7 0.025	8 0.138	9 0.000
Inner	10 0.249	11 0.250	12 0.250	13 0.250	14 0.200	15 0.200	16 0.134	17 0.125	18 0.000

The information on this document is not only based on files in a clearly defined format, but also on freely structured files and inference rules. CircuitHub strives to make it as accurate as possible, but it cannot guarantee the result in all situations. This information is used at the sole risk of its user.

Name	rev_64925.zip	Id.	26740 - QED Handled
Report Generated on	Apr 10, 2025, 4:57:55 PM	Customer	
Board Id		Article Id	

Summary - Copper Layer Minima - Original

Type	Copper to Plated Clr.				Copper to NPTH Clr.			
	!Min.Clr.Overall!	!Min.Clr.toPad!	!Min.Clr.toTrace!	!Min.Clr.toRegion!	!Min.Clr.Overall!	!Min.Clr.toPad!	!Min.Clr.toTrace!	!Min.Clr.toRegion!
	mm	mm	mm	mm	mm	mm	mm	mm
Outer	19 0.400	20 0.400	21 0.400	22 0.676	23 0.128	>1.600	>1.600	24 0.128
Inner	25 0.332	26 0.400	27 0.332	28 0.676	29 0.128	>1.600	30 0.275	31 0.128

Summary - Sequences - Original

Type	Sequences	Tools	Min. End Dia.	Max. End Dia.	Holes	Routs	Ring on Outer	Ring on Inner	Hole to Copper Clr.
			mm	mm			mm	mm	mm
PTH	1	4	0.250	1.000	301	0	0.138	0.125	0.332
NPTH	1	1	1.700	1.700	4	0	>0.800	>0.800	0.128
Total	2	5	0.250	1.700	305	0	0.138	0.125	0.128

Summary - Rout - Original

Type	Tools	Min. End Dia.	Max. End Dia.	Rout Length
		mm	mm	mm
Plated				
NPTH				
Total				

The information on this document is not only based on files in a clearly defined format, but also on freely structured files and inference rules. CircuitHub strives to make it as accurate as possible, but it cannot guarantee the result in all situations. This information is used at the sole risk of its user.

Name	rev_64925.zip	Id.	26740 - QED Handled
Report Generated on	Apr 10, 2025, 4:57:55 PM	Customer	
Board Id		Article Id	

Stackup - Original

Pressing Stages	1

Files - Original

Initial	Renamed	Function	Position	Color	Thickness	
					Base	Finished
					mm	mm
doc-top.pho	drawing_1	drawing	top			
stencil-top.pho	paste-top	paste	top			
silkscreen-top.pho	silk-top	silk	top	white	unknown	unknown
solder-mask-top.pho	mask-top	mask	top	black	unknown	unknown
copper-top.pho	top	outer	1		0.035	unknown
copper-inner-1.pho	in2	inner	2		0.035	unknown
copper-inner-2.pho	in3	inner	3		0.035	unknown
copper-bottom.pho	bot	outer	4		0.035	unknown
solder-mask-bottom.pho	mask-bot	mask	bottom	black	unknown	unknown
silkscreen-bottom.pho	silk-bot	silk	bottom	white	unknown	unknown
stencil-bottom.pho	paste-bot	paste	bottom			
drill-npth.pho	npth	unplated	1-4			
drill.pho	pth	plated	1-4			
doc-bottom.pho	drawing	drawing	bottom			
outline.pho	outline	cad_outline	none			

PCB (Single) - Original

PCB Size	Outline Type	Outline Length	Outline Area	Copper Layers	PCB Thickness
mm x mm		mm	dm^2		mm
57.150 x 90.329	real	443.948	0.4695	4	1.600

Customer Panel (Delivery Array, Assembly Panel) - Original

Original Image	Panel Size	Left	Right	Top	Bottom	X Spacing	Y Spacing	PCB's	Depanel Rout Length
	mm x mm	mm	mm	mm	mm	mm	mm		mm

The information on this document is not only based on files in a clearly defined format, but also on freely structured files and inference rules. CircuitHub strives to make it as accurate as possible, but it cannot guarantee the result in all situations. This information is used at the sole risk of its user.

Name	rev_64925.zip	Id.	26740 - QED Handled
Report Generated on	Apr 10, 2025, 4:57:55 PM	Customer	
Board Id		Article Id	

Thickness - Original

No license to generate this information.

Copper Layer Minima & Area - Original

File	Pos.	Copper Width	Critical Copper Width	Trace Width	Critical Trace Width	Copper to Copper Clr.	Same Net Clr.	Copper Area	
		mm	mm	mm	mm	mm	mm	dm^2	%
top	1	0.237	0.237	0.250	0.250	0.142	0.025	0.3837	82
in2	2	0.250	0.250	0.250	0.250	0.200	0.207	0.3817	81
in3	3	0.249	0.250	0.250	0.250	0.200	0.134	0.3863	82
bot	4	0.160	0.250	0.250	0.250	0.200	0.134	0.4074	87

Copper Layer Minima - Copper to Drill Minima - Original

File	Pos.	Ring					Copper to Drill Clr.		Copper to Outline Clr.			
		Overall	Via	Laser Via	Comp.	Mech.	Plated	NPTH	Overall	to Pad	to Trace	to Region
		mm	mm	mm	mm	mm	mm	mm	mm	mm	mm	mm
top	1	0.138	0.138		0.175		0.400	0.128	0.000	0.371	>1.600	0.000
in2	2	0.125	0.125		0.175		0.332	0.128	0.000	0.371	>1.600	0.000
in3	3	0.125	0.125		0.175		0.386	0.128	0.000	0.371	>1.600	0.000
bot	4	0.175	0.200		0.175		0.400	0.128	0.000	0.371	>1.600	0.000

Copper Layers - Copper to Copper Clearances - Original

File	Pos.	Copper to Copper Clr.				
		Overall	Pad to Pad	Pad to Track	Track to Track	Trace to Trace
		mm	mm	mm	mm	mm
top	1	0.142	0.142	0.200	0.200	0.200
in2	2	0.200	0.200	0.200	0.200	0.200
in3	3	0.200	0.200	0.200	0.200	0.200
bot	4	0.200	0.200	0.260	0.250	0.250

Copper Areas - Original

Side	Total	Free of				Edge Connectors		
		Solder Mask (as supplied)	Solder Mask (open vias)	Gold Mask	Silver Mask	Fingers	Finger Size	Total Area
	dm^2	dm^2	dm^2	dm^2	dm^2		mm x mm	dm^2
Top (incl. 1/2 plated holes and routs)	0.4108	0.0321	0.0616					
Bottom (incl. 1/2 plated holes and routs)	0.4346	0.0185	0.0482					
Total (incl. plated holes and routs)	0.8453	0.0505	0.1098			0		
Plated holes and routs	0.0633	0.0083	0.0633					
Top (without plated holes and routs)	0.3791	0.0279	0.0300					
Bottom (without plated holes and routs)	0.4029	0.0143	0.0165					
Total (without plated holes and routs)	0.7821	0.0422	0.0465					

The information on this document is not only based on files in a clearly defined format, but also on freely structured files and inference rules. CircuitHub strives to make it as accurate as possible, but it cannot guarantee the result in all situations. This information is used at the sole risk of its user.

Name	rev_64925.zip	Id.	26740 - QED Handled
Report Generated on	Apr 10, 2025, 4:57:56 PM	Customer	
Board Id		Article Id	

Drill Tools - Original

File	Tool Nr.	Span	Type	Function	Method	Filled Via	Counter	Dia.	Tol. -	Tol. +	Holes in PCB	Routs in PCB	Double Hits	Predrill Hits
								mm	mm	mm				
npth	10	1-4	NPTH	mech.	mech.	unknown	unknown	1.700	0.000	0.000	4	0	0	0
pth	10	1-4	PTH	via	mech.	unknown	unknown	0.250	0.000	0.000	28	0	0	0
pth	11	1-4	PTH	via	mech.	unknown	unknown	0.400	0.000	0.000	256	0	0	0
pth	12	1-4	PTH	comp.	mech.	unknown	unknown	0.500	0.000	0.000	1	0	0	0
pth	13	1-4	PTH	comp.	mech.	unknown	unknown	1.000	0.000	0.000	16	0	0	0

Drill Tools - Drill vs Copper - Original

File	Tool Nr.	Span	Type	Function	Method	Dia.	Ring on Outer	Ring on Inner	Min. Pad Size	Via in Pad	Plated to Copper Clr.			
											!Min.Clr.Overall!	!Min.Clr.toPad!	!Min.Clr.toTrace!	!Min.Clr.toRegion!
						mm	mm	mm	mm		mm	mm	mm	mm
npth	10	1-4	NPTH	mech.	mech.	1.700	>0.800	>0.800						
pth	10	1-4	PTH	via	mech.	0.250	0.138	0.125	0.500	5	0.332	0.425	0.332	>0.800
pth	11	1-4	PTH	via	mech.	0.400	0.200	0.200	0.800	0	0.400	0.400	0.400	0.700
pth	12	1-4	PTH	comp.	mech.	0.500	0.175	0.175	0.850		0.625	>0.800	0.625	0.676
pth	13	1-4	PTH	comp.	mech.	1.000	0.350	0.350	1.700		0.580	>0.800	0.580	>0.800

Sequences - Original

Span	Type	Tools	Min. End Dia.	Max. End Dia.	Holes	Ring on Outer	Ring on Inner	Hole to Copper Clr.	Hole to Hole Clr., within Seq.		Overlapping Holes, within Seq.	Hole to Hole Clr., between Seqs		Hole to Outline Clr.	Slot to Outline Clr.
									Any Net	Diff. Net		Any Net	Diff. Net		
			mm	mm		mm	mm	mm	mm	mm		mm	mm	mm	mm
1-4	PTH	4	0.250	1.000	301	0.138	0.125	0.332	0.457	0.600	No	>0.800	>0.800	0.500	>6.400
1-4	NPTH	1	1.700	1.700	4	>0.800	>0.800	0.128	>1.600		No	>0.800		2.850	>6.400
All	All	5	0.250	1.700	305	0.138	0.125	0.128	0.457	0.600	No	>0.800	>0.800	0.500	>6.400

Rout Tools - Original

File	Tool Nr.	Type	Tool Dia.	End Dia.	Rout Length	Nibble Count
			mm	mm	mm	

Routed Holes - Original

File	Hole Nr.	Instances	X Size	Y Size	Rout Length	Nibble Count
			mm	mm	mm	

Sequences Analysis - Original

File	Pos.	Stacked Vias	Overlapped Vias	Via Plug Clr.	Top Tool			Bottom Tool		
					Top Drill File	Tool Nr.	Dia.	Bottom Drill File	Tool Nr.	Dia.
				mm			mm			mm

The information on this document is not only based on files in a clearly defined format, but also on freely structured files and inference rules. CircuitHub strives to make it as accurate as possible, but it cannot guarantee the result in all situations. This information is used at the sole risk of its user.

Name	rev_64925.zip	Id.	26740 - QED Handled
Report Generated on	Apr 10, 2025, 4:57:56 PM	Customer	
Board Id		Article Id	

SMD (Incl. BGA) - Original

	SMD (Incl. BGA)				SMD (Excl. BGA)	BGA				
Side	Pads	Min. Pad	Pitch of Min. Pad	Solder Mask Defined Pads	Pads	Pads	Min. Pad	Min. Pitch	All Tracks Centered	Drilled Pads
		mm	mm				mm	mm		
Top	277	0.240	0.500	0	277	0				
Bottom	40	1.000	2.540	0	40	0				
Both	317	0.240	0.500	0	317	0				

Solder Mask - Original

Side	Mask to Mask Clr.	Web	Ring on Cu Defined Pads	Ring on SM Defined Pads	Mask to Copper Clr.	Mask Opening	Fully Covered Via Holes	Partly Covered Via Holes	One Side Covered Vias	Both Sides Covered Vias	No Side Covered Vias
	mm	mm	mm	mm	mm	mm					
Top	0.200	0.110	0.012	>0.250	0.111	0.240	Yes	No			
Bottom	>0.250	>0.250	>0.250	>0.250	0.128	0.850	Yes	No			
Both	0.200	0.110	0.012		0.111	0.240	Yes	No	Yes	Yes	No

Carbon Masks - Original

File	Position	Carbon Width	Carbon to Carbon Clr.	Clr. to Plated Hole	Clr. to Outline	Layer Area	
		mm	mm	mm	mm	dm^2	%

Peeloff Masks - Original

File	Position	Min. Peelable Width	Peelable to Peelable Clr.	Clr. to Plated Hole	Clr. to Outline	Layer Area	
		mm	mm	mm	mm	dm^2	%

Legend Layers - Original

File	Position	Legend Width	Legend to Legend Clr.	Legend to (Comp/SMD/BGA) Pad Clr.	Layer Area	
		mm	mm	mm	dm^2	%
silk-top	top	0.100	0.043	0.140	0.0178	4
silk-bot	bottom	0.120	0.187	0.200	0.0012	0

Gold Layers - Original

File	Position	Gold to Gold Clr.	Clr. to Outline	Layer Area	
		mm	mm	dm^2	%

Heatsink Layers - Original

File	Position	Heatsink to Heatsink Clr.	Clr. to Outline	Layer Area	
		mm	mm	dm^2	%

The information on this document is not only based on files in a clearly defined format, but also on freely structured files and inference rules. CircuitHub strives to make it as accurate as possible, but it cannot guarantee the result in all situations. This information is used at the sole risk of its user.

Name	rev_64925.zip	Id.	26740 - QED Handled
Report Generated on	Apr 10, 2025, 4:57:56 PM	Customer	
Board Id		Article Id	

Scoring - Minimum Clearance - Original

No license to generate this information.

Bare Board Test - Original

Side	Testable Points (TPs)	Max. TP Density	SMD Pads	Min. SMD Pad	Pitch of Min. SMD Pad	Edge Connector Fingers	Number of Nets
		TP/dm^2		mm	mm		
Top	322	2701	277	0.240	0.500	0	
Bottom	57	679	40	1.000	2.540	0	
Both	379	2701	317	0.240	0.500	0	110

DFM Classes - Original

			Standard						Advanced		
			1	2	3	4	5	6	7	8	9
Track & Gap	Min Clearance (Track-Track / Track-Pad / Pad-Pad)	0.142	0.300	0.250	0.200	0.150	0.130	0.120	0.100	0.075	0.060
	Min Track Width / Thermal Gap	0.237	0.300	0.250	0.200	0.150	0.130	0.120	0.100	0.075	0.060
Ring for IPC Class 2	Outer Min Layer Annular Ring	0.138	0.250	0.220	0.200	0.150	0.130	0.120	0.100	0.075	0.060
	Inner Min Layer Annular Ring	0.125	0.250	0.220	0.200	0.150	0.130	0.120	0.100	0.075	0.060
Aspect Ratio	Max Aspect Ratio for Plated Hole	6.400	8.000	8.000	8.000	8.000	10.000	10.000	10.000	10.000	10.000
Drill - Cu	Distance PTH to PTH	0.457	0.600	0.500	0.400	0.350	0.300	0.300	0.275	0.250	0.230
	Distance NPTH to Cu on inner layers	0.128	0.250	0.250	0.200	0.200	0.150	0.150	0.150	0.100	0.100
	Distance NPTH to Cu on outer layers	0.128	0.250	0.250	0.200	0.200	0.150	0.150	0.150	0.100	0.100
Cu Thickness	Max Cu Thickness that can be etched		0.175	0.140	0.105	0.070	0.070	0.035	0.035	0.035	0.017
Solder Mask	Solder Mask Annular Ring	0.012	0.100	0.075	0.050	0.050	0.050	0.050	0.040	0.030	0.010
	Solder Mask SolderWeb	0.110	0.150	0.125	0.100	0.100	0.100	0.100	0.080	0.075	0.075

Anomalies - Original

Outline cutout slightly clips functional copper in layer 'top'

Outline cutout slightly clips functional copper in layer 'in2'

Outline cutout slightly clips functional copper in layer 'in3'

Outline cutout slightly clips functional copper in layer 'bot'

[AutoClean] Functional copper outside or touching outline in layer 'top'

[AutoClean] Functional copper outside or touching outline in layer 'in2'

[AutoClean] Functional copper outside or touching outline in layer 'in3'

[AutoClean] Functional copper outside or touching outline in layer 'bot'

Functional copper outside or touching outline in layer 'top'

Functional copper outside or touching outline in layer 'in2'

Functional copper outside or touching outline in layer 'in3'

Functional copper outside or touching outline in layer 'bot'

The information on this document is not only based on files in a clearly defined format, but also on freely structured files and inference rules. CircuitHub strives to make it as accurate as possible, but it cannot guarantee the result in all situations. This information is used at the sole risk of its user.

Name	rev_64925.zip	Id.	26740 - QED Handled
Report Generated on	Apr 10, 2025, 4:57:56 PM	Customer	
Board Id		Article Id	

Input Remarks - Original

Gerber import: Invalid coincident draw, continuing without cleanup 'copper-bottom.pho'

Gerber import: Self-intersecting contours are detected, continuing with an interpretation of the contours. 'copper-bottom.pho' (at line 6565)

Gerber import: Invalid coincident draw, continuing without cleanup 'copper-inner-1.pho'

Gerber import: Self-intersecting contours are detected, continuing with an interpretation of the contours. 'copper-inner-1.pho' (at line 3426)

Gerber import: Invalid contour, continuing with an interpretation. Cannot be cleaned up automatically. Must be cleaned up manually. 'copper-inner-1.pho' (at line 5974)

Gerber import: Invalid coincident draw, continuing without cleanup 'copper-inner-2.pho'

Gerber import: Self-intersecting contours are detected, continuing with an interpretation of the contours. 'copper-inner-2.pho' (at line 4107)

Gerber import: Invalid coincident draw, continuing without cleanup 'copper-top.pho'

Gerber import: Self-intersecting contours are detected, continuing with an interpretation of the contours. 'copper-top.pho' (at line 8852)

Gerber Job File import: DISCREPANCY: Extra top layers mismatch between Gerber Job File and current job stackup.

Customer and Job Identification - Original

Customer			
Customer		Contact Person	
Email			

Customer and Job Identification - Original

Job			
Article Id		Board Id	
DPMX Output Path	CH		

Comments - Original

The information on this document is not only based on files in a clearly defined format, but also on freely structured files and inference rules. CircuitHub strives to make it as accurate as possible, but it cannot guarantee the result in all situations. This information is used at the sole risk of its user.

Name	rev_64925.zip	Id.	26740 - QED Handled
Report Generated on	Apr 10, 2025, 4:57:56 PM	Customer	
Board Id		Article Id	

Summary Minimum Design Characteristics - Locations - Original

1

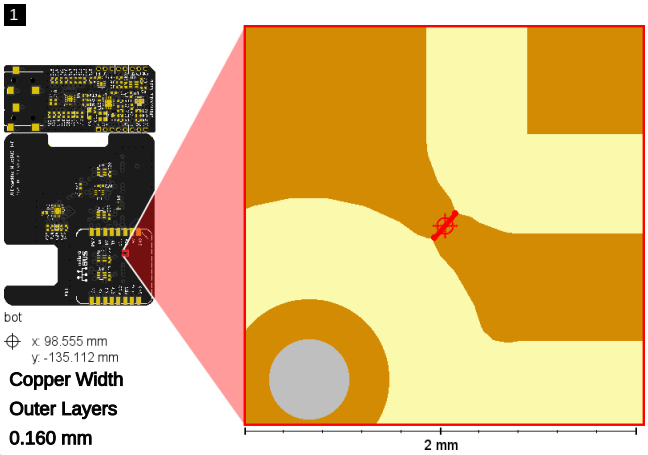

Copper Width
Outer Layers
0.160 mm

2

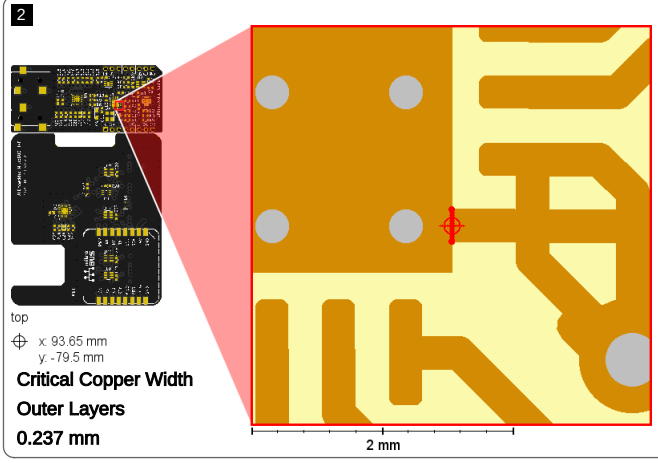

Critical Copper Width
Outer Layers
0.237 mm

3

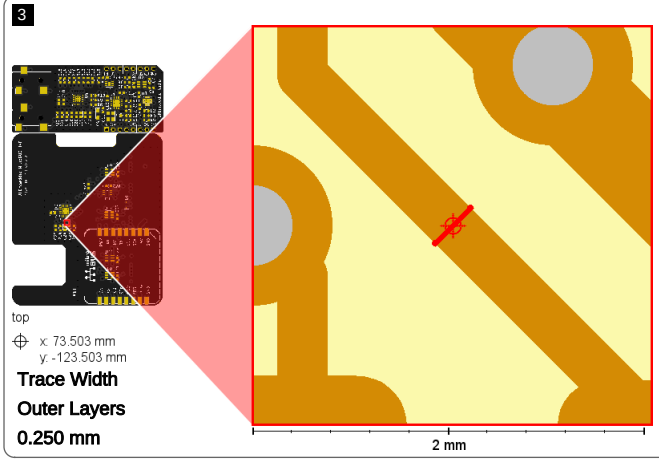

Trace Width
Outer Layers
0.250 mm

4

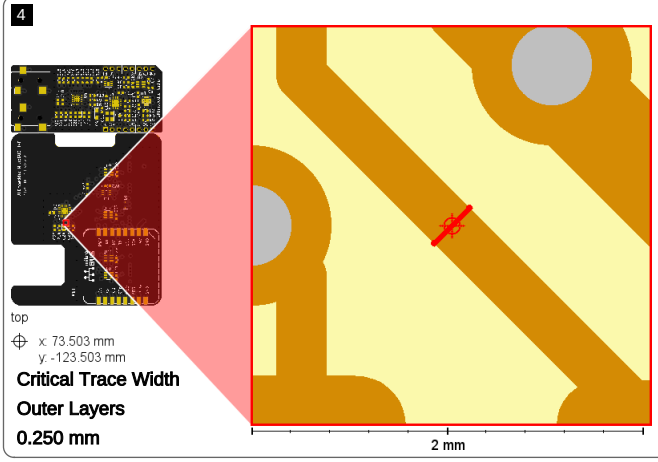

Critical Trace Width
Outer Layers
0.250 mm

5

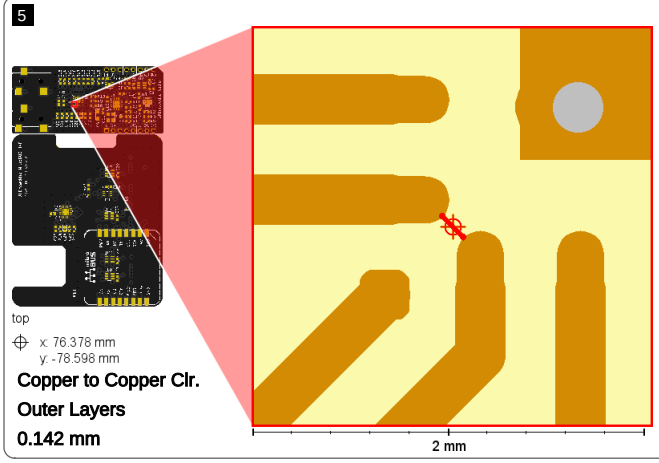

Copper to Copper Clr.
Outer Layers
0.142 mm

6

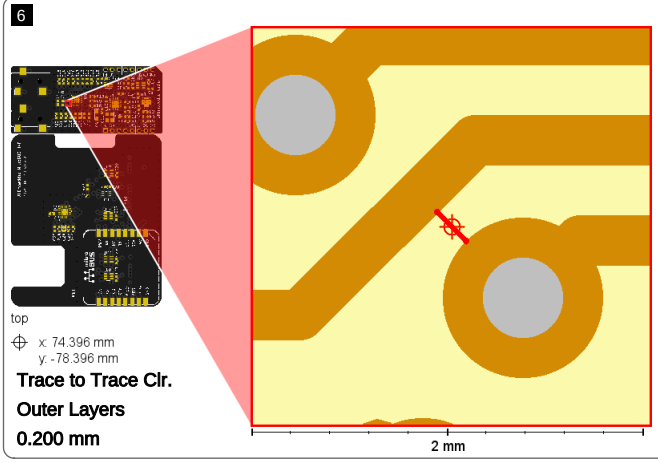

Trace to Trace Clr.
Outer Layers
0.200 mm

The information on this document is not only based on files in a clearly defined format, but also on freely structured files and inference rules. CircuitHub strives to make it as accurate as possible, but it cannot guarantee the result in all situations. This information is used at the sole risk of its user.

Name	rev_64925.zip	Id.	26740 - QED Handled
Report Generated on	Apr 10, 2025, 4:57:56 PM	Customer	
Board Id		Article Id	

7

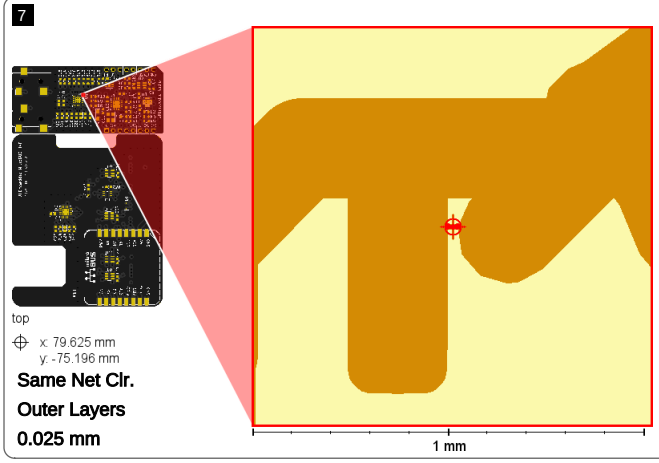

Same Net Clr.
Outer Layers
0.025 mm

8

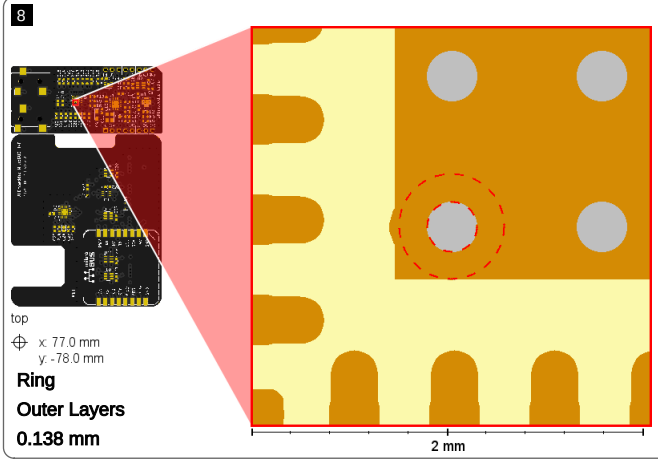

Ring
Outer Layers
0.138 mm

9

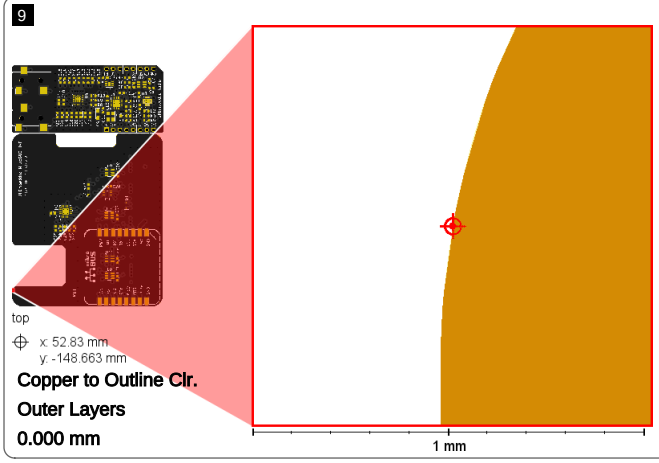

Copper to Outline Clr.
Outer Layers
0.000 mm

10

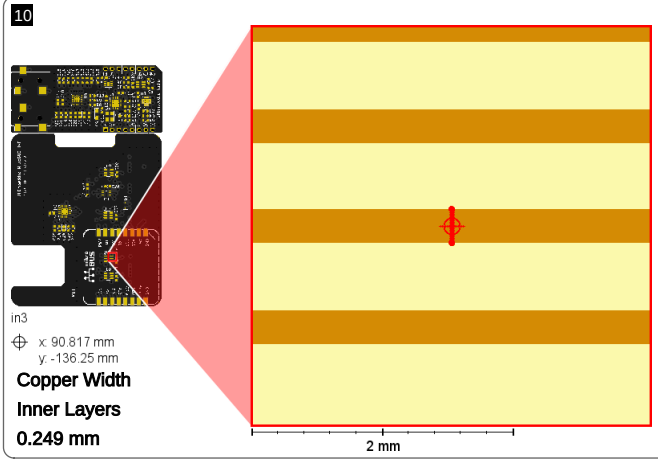

Copper Width
Inner Layers
0.249 mm

11

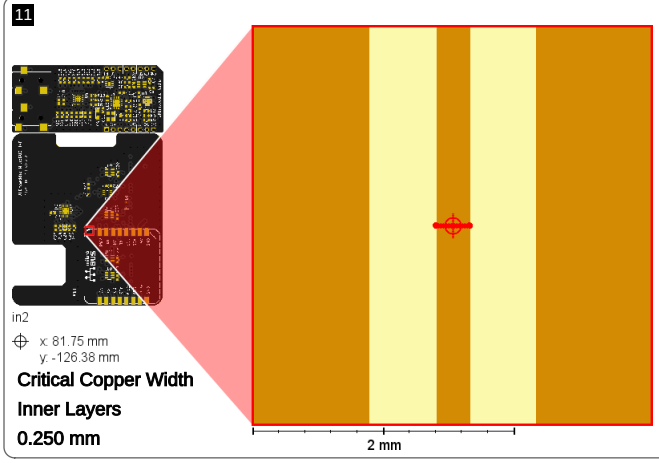

Critical Copper Width
Inner Layers
0.250 mm

12

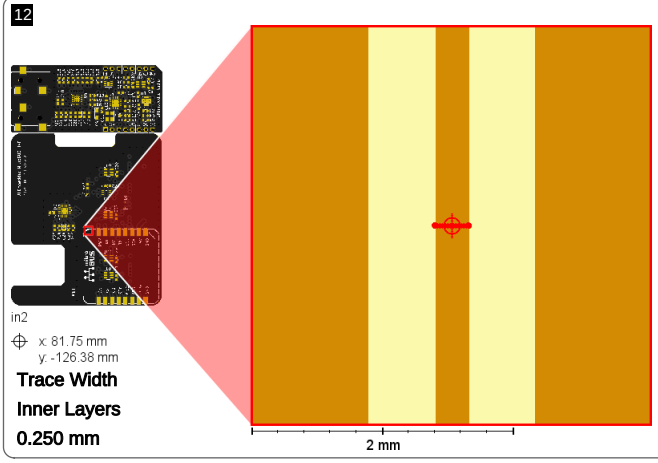

Trace Width
Inner Layers
0.250 mm

The information on this document is not only based on files in a clearly defined format, but also on freely structured files and inference rules. CircuitHub strives to make it as accurate as possible, but it cannot guarantee the result in all situations. This information is used at the sole risk of its user.

Name	rev_64925.zip	Id.	26740 - QED Handled
Report Generated on	Apr 10, 2025, 4:57:57 PM	Customer	
Board Id		Article Id	

13

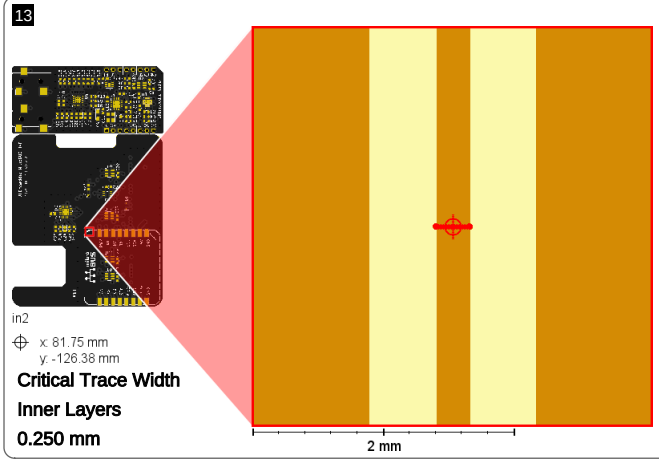

Critical Trace Width
Inner Layers
0.250 mm

14

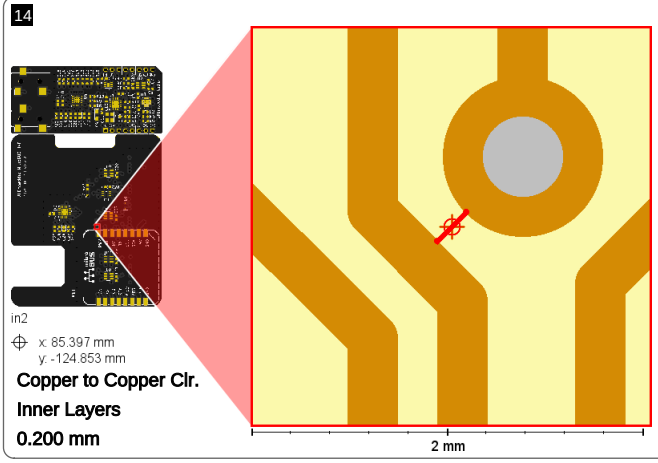

Copper to Copper Clr.
Inner Layers
0.200 mm

15

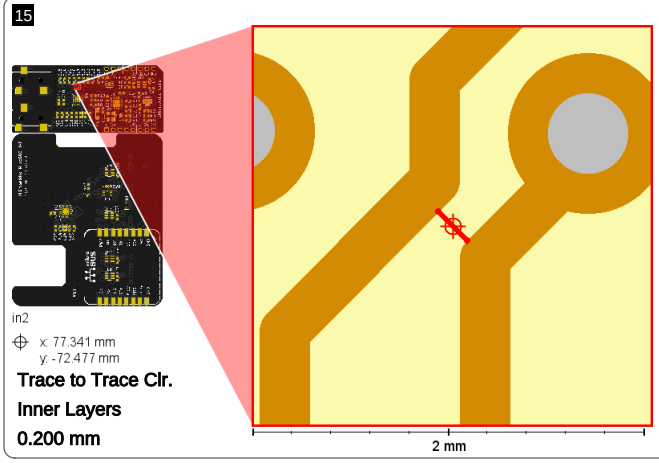

Trace to Trace Clr.
Inner Layers
0.200 mm

16

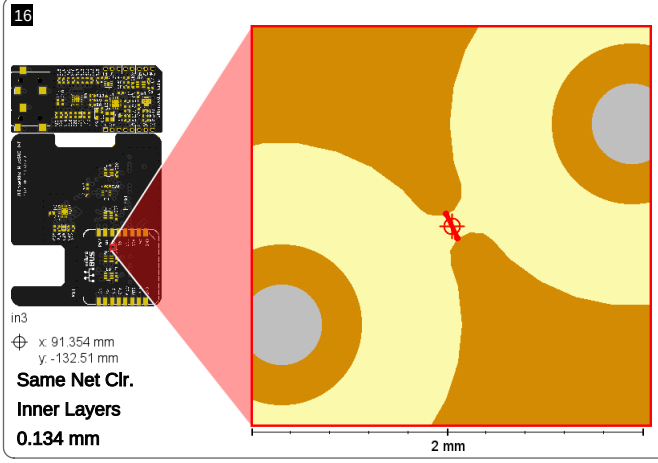

Same Net Clr.
Inner Layers
0.134 mm

17

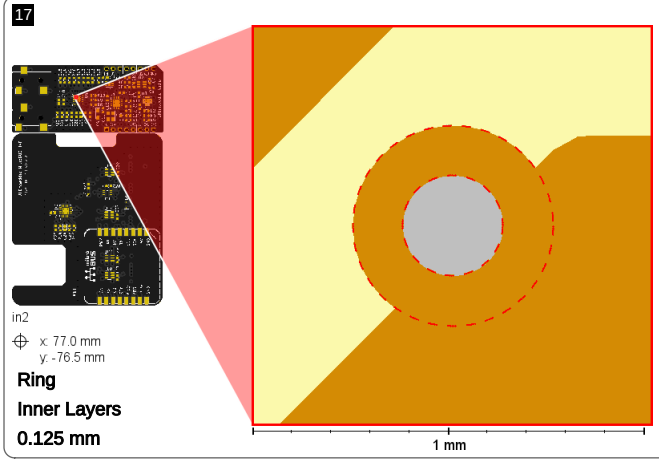

Ring
Inner Layers
0.125 mm

18

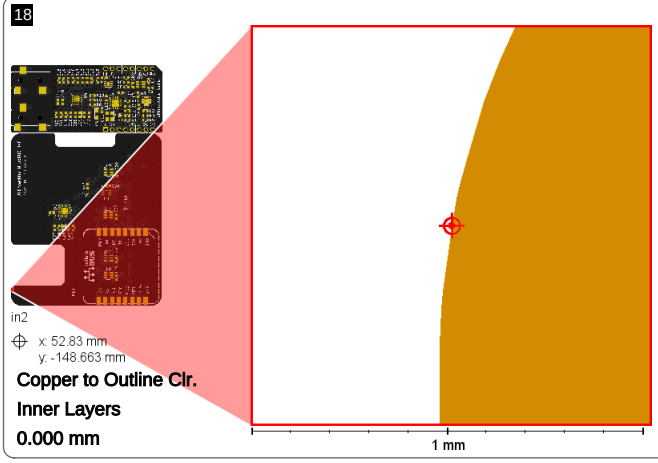

Copper to Outline Clr.
Inner Layers
0.000 mm

The information on this document is not only based on files in a clearly defined format, but also on freely structured files and inference rules. CircuitHub strives to make it as accurate as possible, but it cannot guarantee the result in all situations. This information is used at the sole risk of its user.

Name	rev_64925.zip	Id.	26740 - QED Handled
Report Generated on	Apr 10, 2025, 4:57:57 PM	Customer	
Board Id		Article Id	

19

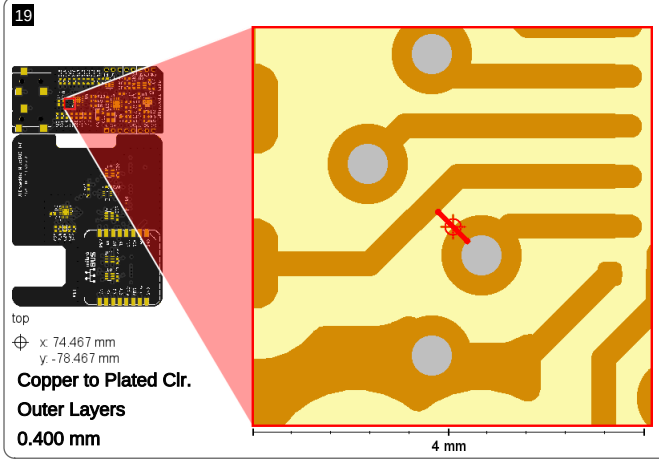

Copper to Plated Clr.

Outer Layers

0.400 mm

20

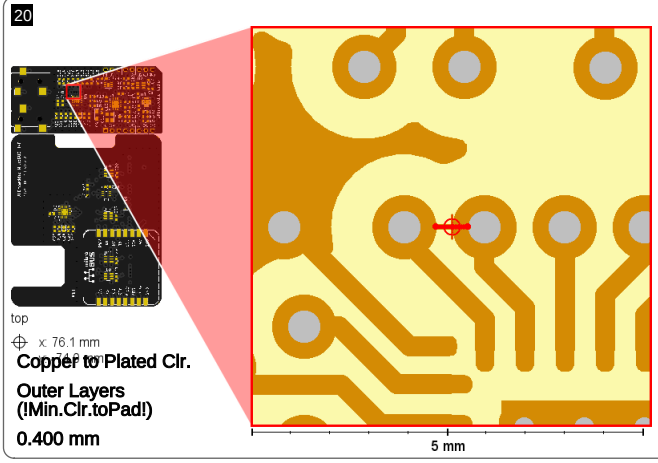

Copper to Plated Clr.

Outer Layers
(!Min.Clr.toPad!)

0.400 mm

21

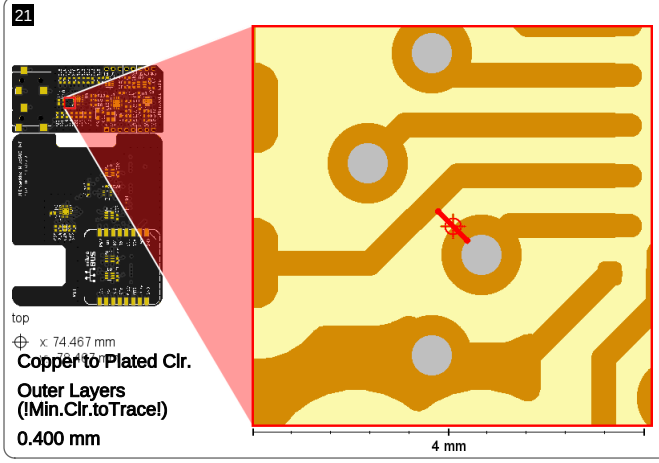

Copper to Plated Clr.

Outer Layers
(!Min.Clr.toTrace!)

0.400 mm

22

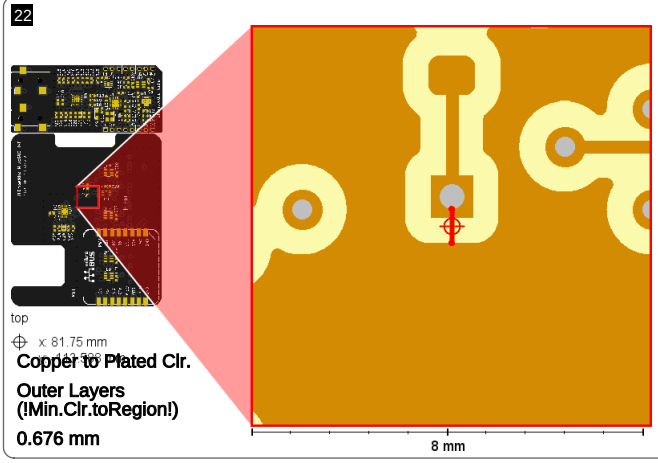

Copper to Plated Clr.

Outer Layers
(!Min.Clr.toRegion!)

0.676 mm

23

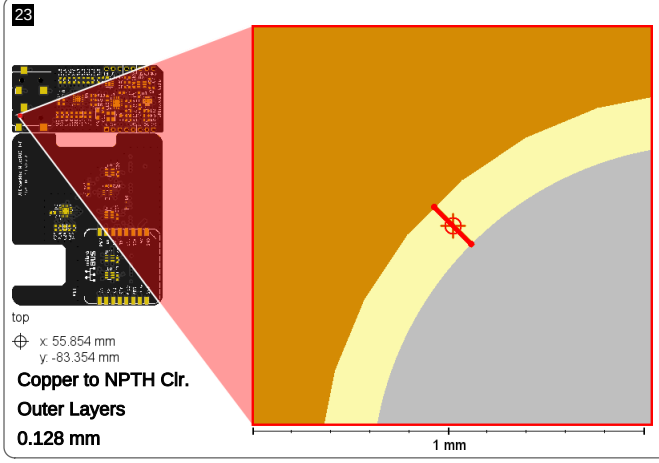

Copper to NPTH Clr.

Outer Layers

0.128 mm

24

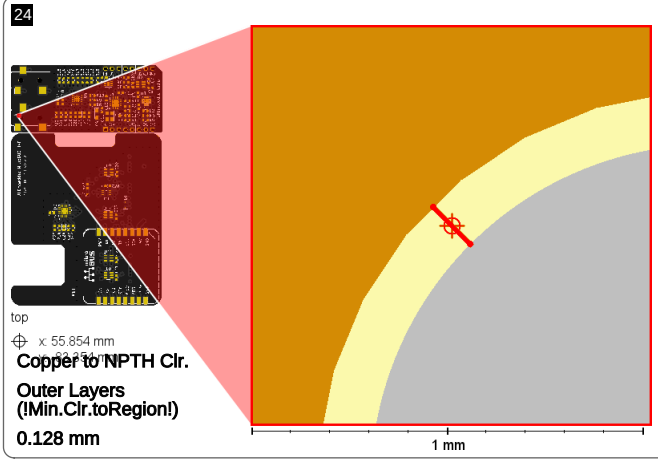

Copper to NPTH Clr.

Outer Layers
(!Min.Clr.toRegion!)

0.128 mm

CircuitHub

The information on this document is not only based on files in a clearly defined format, but also on freely structured files and inference rules. CircuitHub strives to make it as accurate as possible, but it cannot guarantee the result in all situations. This information is used at the sole risk of its user.

Name	rev_64925.zip	Id.	26740 - QED Handled
Report Generated on	Apr 10, 2025, 4:57:57 PM	Customer	
Board Id		Article Id	

25

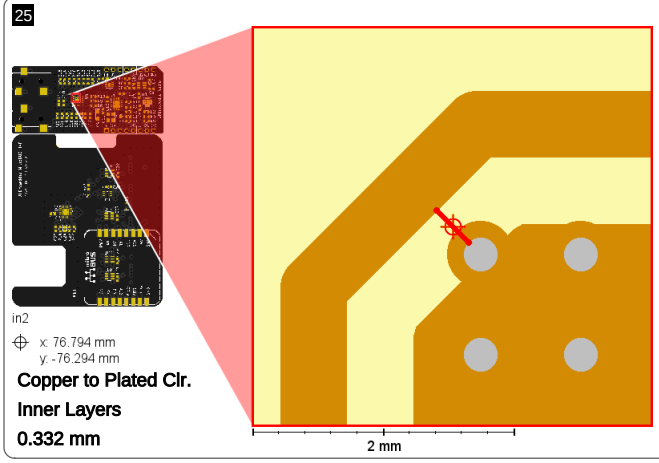

Copper to Plated Clr.

Inner Layers

0.332 mm

26

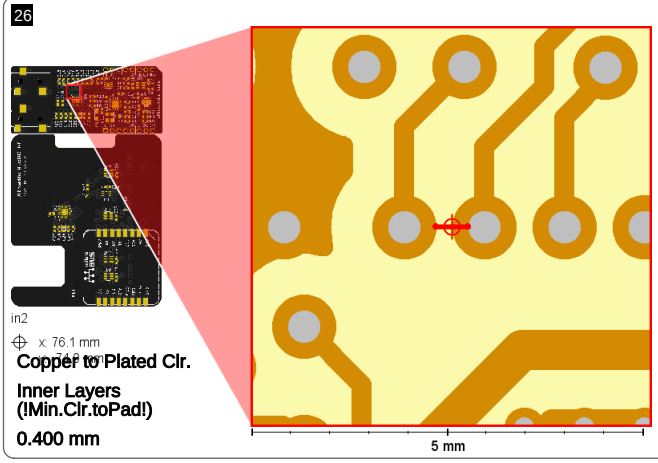

Copper to Plated Clr.

Inner Layers
(!Min.Clr.toPad!)

0.400 mm

27

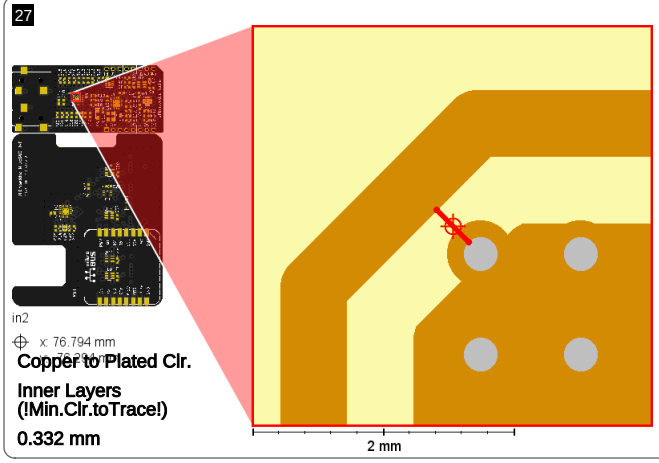

Copper to Plated Clr.

Inner Layers
(!Min.Clr.toTrace!)

0.332 mm

28

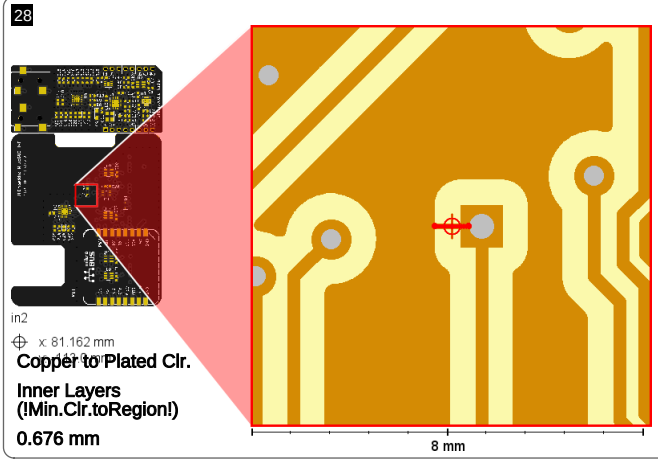

Copper to Plated Clr.

Inner Layers
(!Min.Clr.toRegion!)

0.676 mm

29

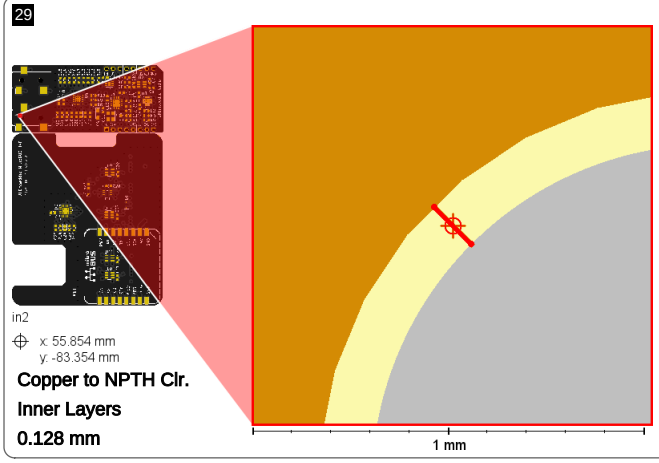

Copper to NPTH Clr.

Inner Layers

0.128 mm

30

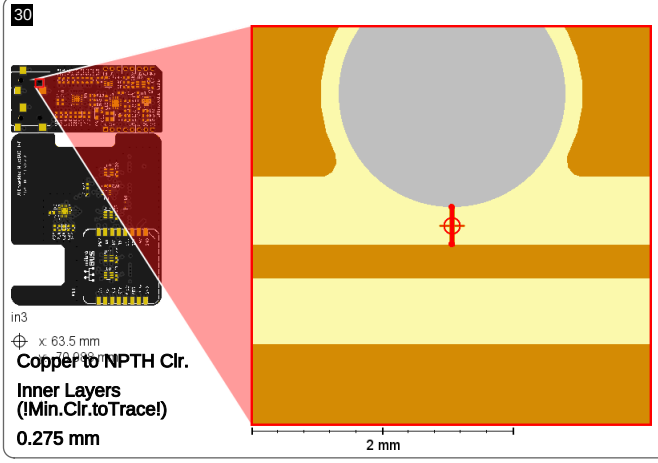

Copper to NPTH Clr.

Inner Layers
(!Min.Clr.toTrace!)

0.275 mm

The information on this document is not only based on files in a clearly defined format, but also on freely structured files and inference rules. CircuitHub strives to make it as accurate as possible, but it cannot guarantee the result in all situations. This information is used at the sole risk of its user.

Name	rev_64925.zip	Id.	26740 - QED Handled
Report Generated on	Apr 10, 2025, 4:57:57 PM	Customer	
Board Id		Article Id	

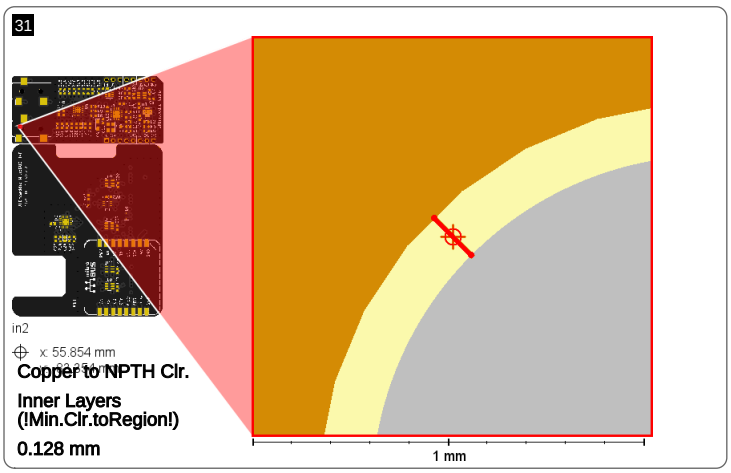

The information on this document is not only based on files in a clearly defined format, but also on freely structured files and inference rules. CircuitHub strives to make it as accurate as possible, but it cannot guarantee the result in all situations. This information is used at the sole risk of its user.